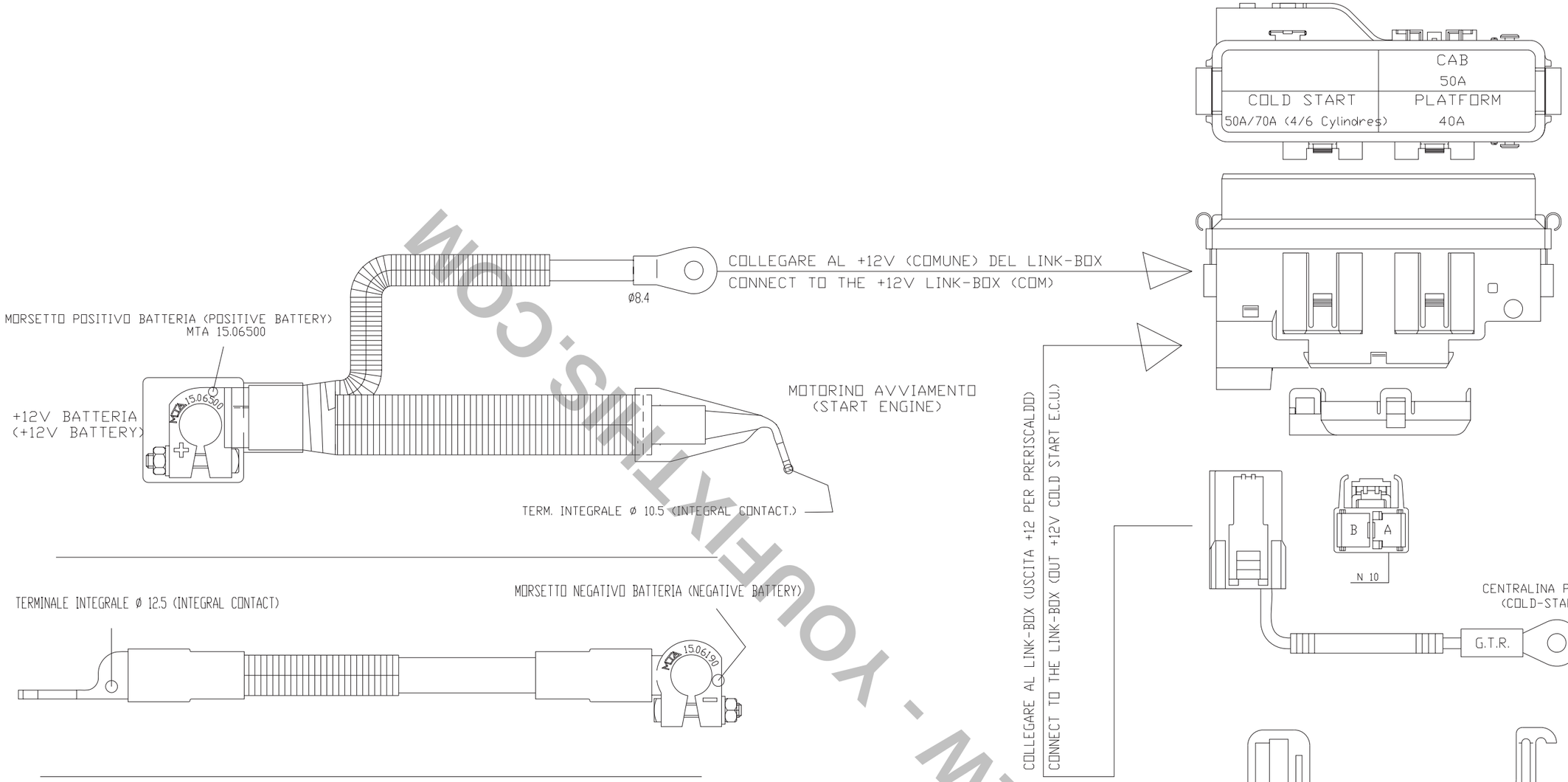

TABELLA COLORI / COLOURS TABLE			
M	Marrone/Brown	C	Arancio/Orange
V	Verde/Green	A	Azzurro/Blue
Z	Viola/Violet	B	Bianco/White
N	Nero/Black	L	Blu/Dark Blue
S	Rosa/Pink	G	Giallo/Yellow
R	Rosso/Red	H	Grigio/Gray

PREVIEW - YOUFIXTHIS.COM

Download full manual at youfixthis.com

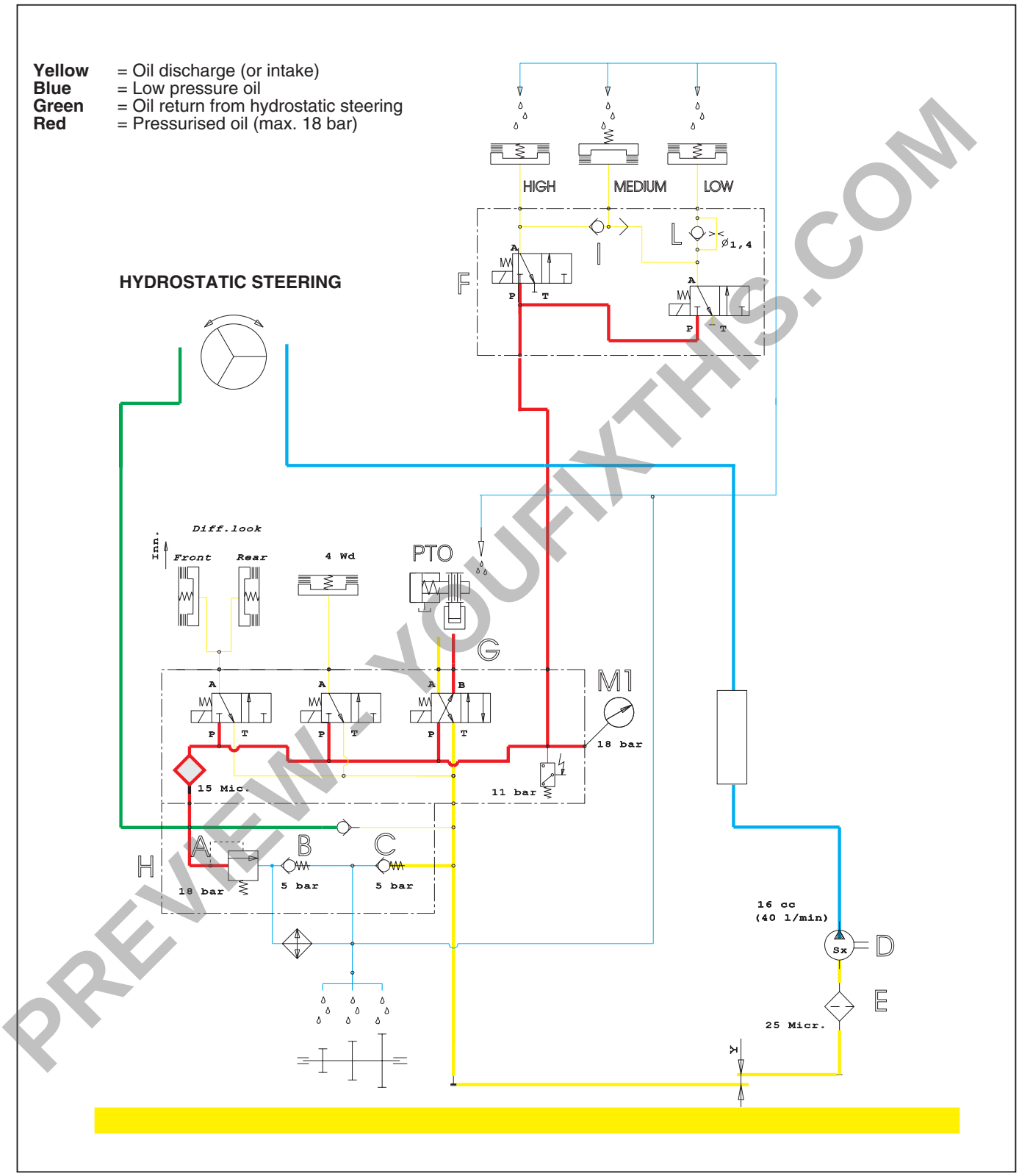

Fig. 12 - Diagram showing hydraulic operation of Powershift transmission (version without Powershuttle).

A - Sequence valve (operating pressure 18 bar)
B - Transmission lubricant pressure regulator (setting 5 bar)
C - Check valve 30 l/min
D - Oil pump (flow rate 10 ÷ 30 l/min)
E - Suction filter (25 micron)
F - Solenoid valves assembly
G - Power unit for electrohydraulic control functions
H - Oil pressure control valves assembly
I - Bistable valve
L - Modulating valve
M1 - Pressure gauge scale 0 ÷ 40 bar

PREVIEW - YOUFIXTHIS.COM

Download full manual at youfixthis.com

PREVIEW - YOUFIXTHIS.COM

Tightening torques

Before tightening all screws should be cleaned and lubricated with engine oil.

	kgm	Nm
Bolts securing front housing to transmission housing	8.6	85
Bolts securing intermediate and transmission housings	14	140
Bolts securing H-M-L cover	3	30
Bolts securing engine to transmission housing	14	140
Bolts securing lift housing to transmission housing8.6	86	
Crownwheel bolts	12.5	125
Bevel pinion lock nut	44 ÷ 48	440 ÷ 480
Bolts securing differential flanges	3.3 ÷ 4.1	32 ÷ 40
Bolts securing differential cage to halfshaft	13.5 ÷ 16.8	130 ÷ 164
- AGROPLUS 75-85-95	17.5	170
- AGROPLUS 100	6	60
Rear bracket fixing bolts		
- AGROPLUS 75-85-95	8.6 ÷ 9.6	84 ÷ 94
- AGROPLUS 100	17	170
Rear bracket fixing bolts AGROPLUS 100	12	120
P.T.O. shaft lock nut	16 ÷ 18	160 ÷ 180
Bolts securing transmission to engine flange	9 ÷ 11	88 ÷ 107

N.B.: For any values not given in the above table see the next page.

Download full manual at youfixthis.com

Alarm warning light
In the centre of the control panel there is a triangle. In the event of a problem with the electronic control system, this triangle will start flashing.

ALARM CODES TABLE		
Codes	**Description of alarm**	**Type of alarm**
11	EPROM (Program Memory), Immobilizing alarm	**immobilizing alarm**
12	Position control sensor disconnected	
13	Up and/or down solenoid valve short circuit	
14	Up solenoid valve disconnected	
15	Down solenoid valve disconnected	
21	Internal fault at control unit	
22	Position control sensor incorrectly set	
23		
24		
25		
31	Draft control sensor disconnected	**warning alarm**
32	Draft control sensor not correctly set	
33	Wheel speed sensor faulty	
34	RADAR fault	
35	EPROM fault (CPU data memory)	
41		
42		
43		
44		
45		
51	Steering sensor disconnected	
52		
53		
54	Wrong wheel constant	
55	Wrong RADAR constant	

A code number is indicated as follows:
— triangle alight continuously for 2 seconds;
— successive blinks of 0.3 s duration corresponding to tens;
— triangle alight continuously for 0.8 s;
— successive blinks of 0.3 s duration corresponding to units;
— repetition of cycle until alarm deactivates.

PREVIEW - YOUFIXTHIS.COM

Download full manual at youfixthis.com

Gearbox removal

The complete gearbox assembly can be removed from the tractor very easily without requiring prior removal of the cab or platform, which can be supported during the operation by two props under the two rear “silent-block” mountings (Fig. 18).

To facilitate removal of the gearbox assembly we recommend the use of the mobile track stands 5.9030.002.0 and a hoist.

— Position the aforementioned stands and remove the rear tractor wheels.
— Remove the fuel tank after first disconnecting the fuel supply/return pipes and the electrical lead from the fuel gauge sensor.
— Detach the two gear and range control rods from the gearbox. Remove the four screws securing the control lever support to the gearbox and push the support downwards to disengage the internal reverser lever from the notch on the control rod.
— Disconnect the oil supply pipe to the hydrostatic steering control valve at the point of connection to the vibration dampers.
— Disconnect all the linkage rods from the levers located on the left-hand side of the driver's seat (PTO SYNCHRO and PTO NORMAL-ECONOMICAL selection), the parking brake linkage, and the support for the power-lift control levers (on models with mechanical lifts only).
— Disconnect the P.T.O. clutch control (on tractors not equipped with electrohydraulic controls).
— Disconnect the bowdens from the auxiliary hydraulic control valves.
— Disconnect the oil supply pipe to the front lift (if fitted).
— Disconnect the oil supply pipe to the pressure control valve located on the right-hand side of the gearbox.
— Disconnect the oil supply pipe to the front differential lock, or detach the control linkage on tractors not equipped with electrohydraulic controls.
— Disconnect the electrical leads from the draft sensor and position sensor of the electronic lift control (if present).
— Disconnect the electrical leads connected to the raising valve and the lowering valve of the power-lift control (on tractors equipped with electronic power-lift control).
— Disconnect the electrical lead connected to the radar (if fitted).
— Disconnect the lead connected to the wheel speed sensor (on tractors fitted with electronic power-lift control).
— Disconnect the rear brake pipes.

Remove the bolts securing the cab to the 4 silent-block mountings.
With the aid of a hoist, push the rear gearbox assembly backwards, whilst keeping the parts aligned axially to allow the shafts to disengage their couplings.

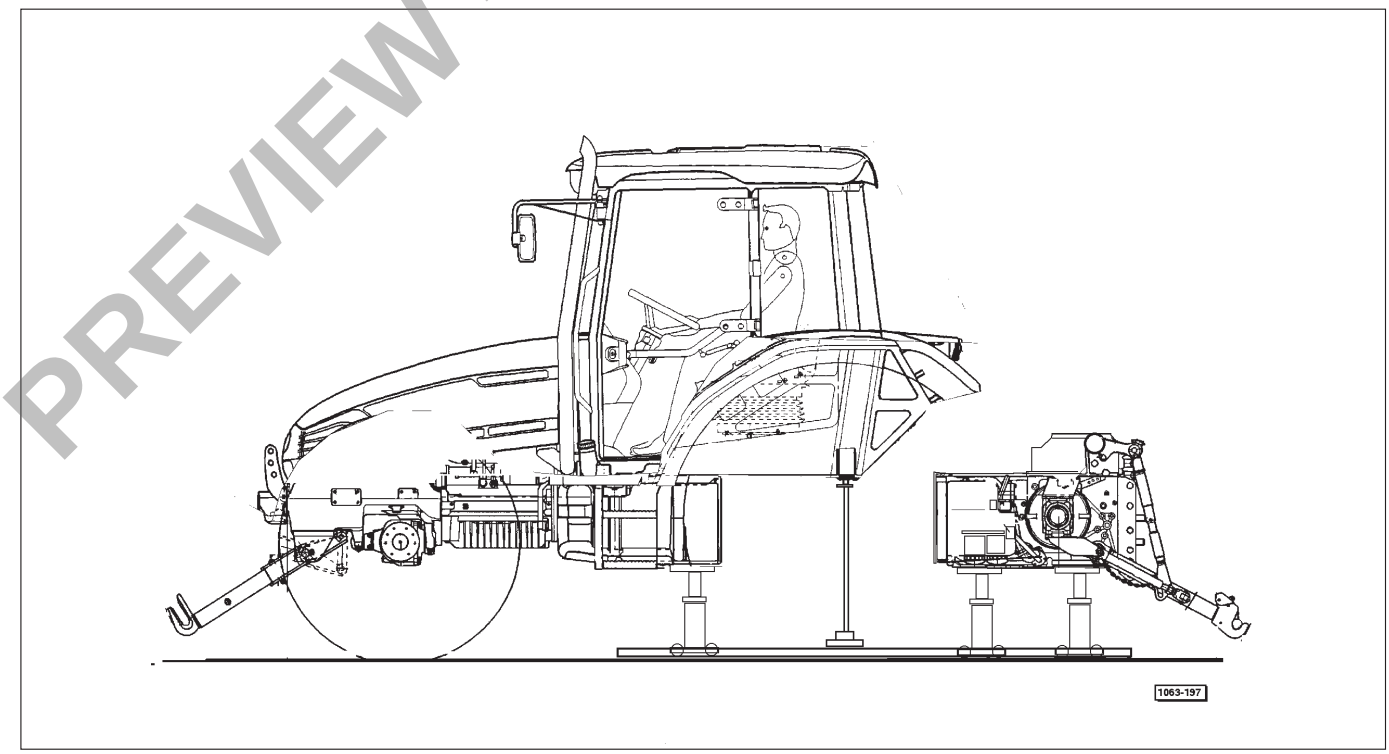

Fig. 18 - Gearbox removal.

PREVIEW - YOUFIXTHIS.COM

Download full manual at youfixthis.com

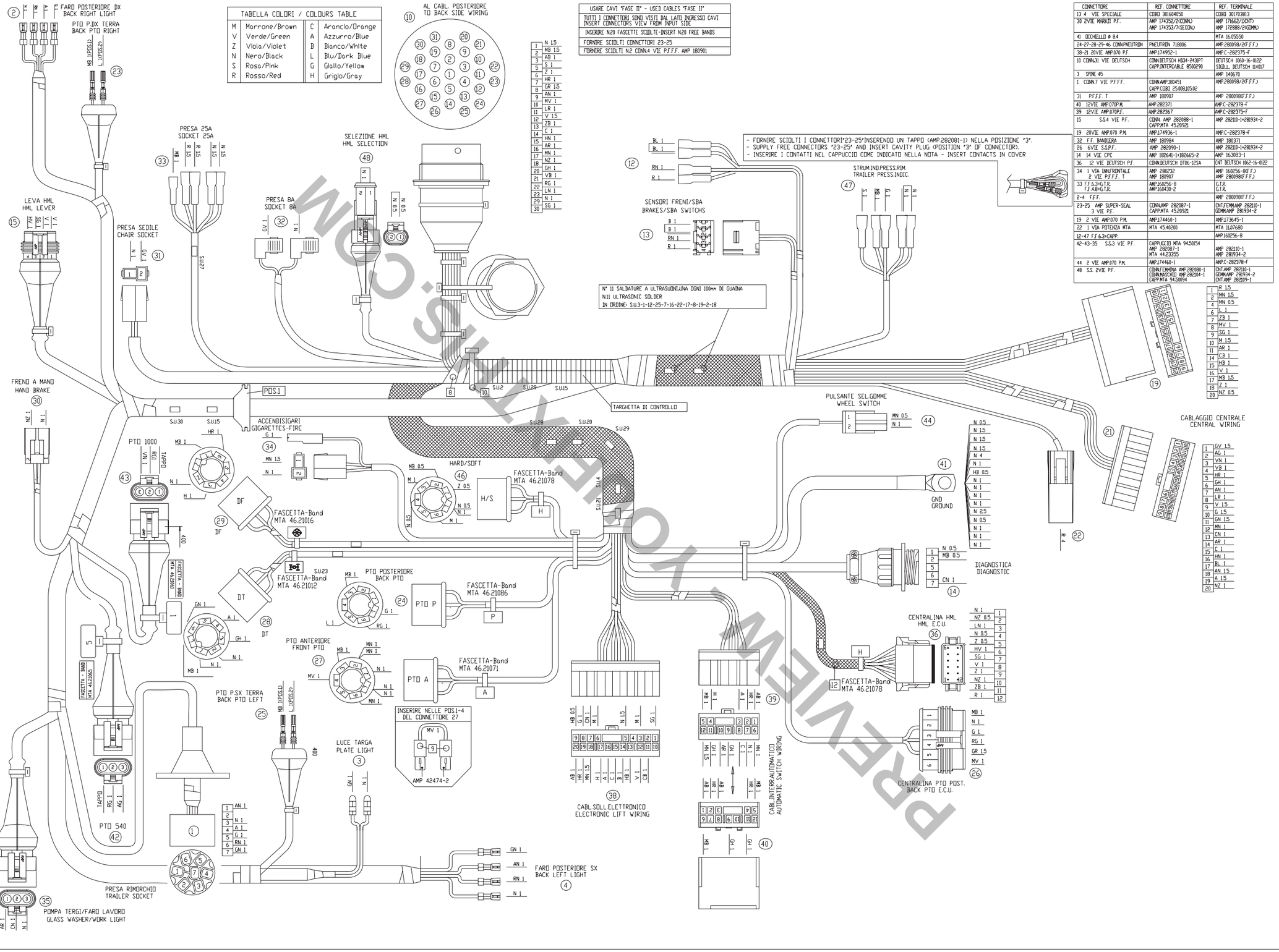

TRACTOR WIRING — DIAGRAM 6 - NORMAL UNDER CARPET WIRING — **010.8144.4 dwg.1**

Download full manual at youfixthis.com

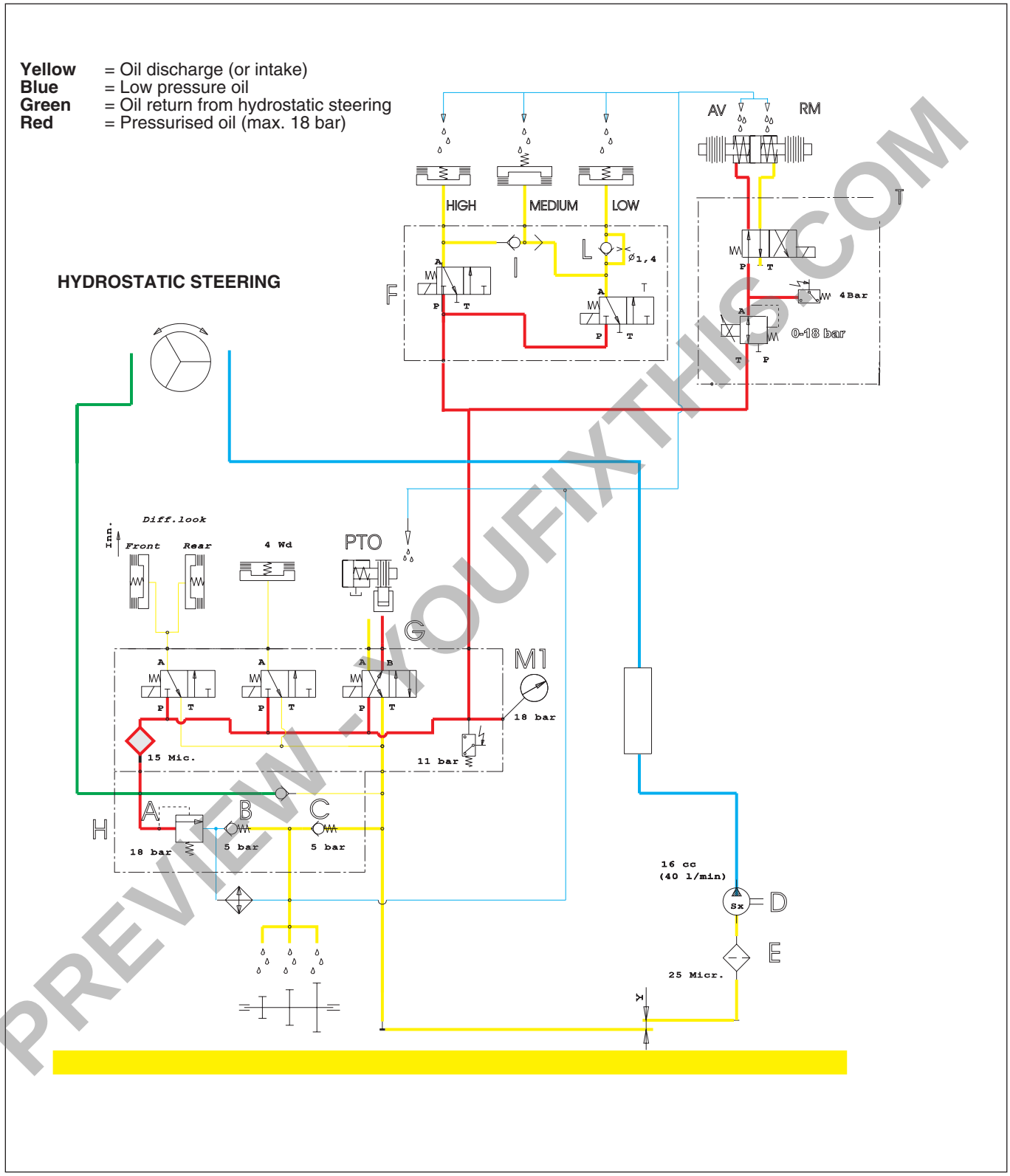

PREVIEW - YOUFIXTHIS.COM

Fig. 14 - Diagram showing hydraulic operation of Powershift transmission with Powershuttle.

A - Sequence valve (operating pressure 18 bar)
B - Transmission lubricant pressure regulator (setting 5 bar)
C - Check valve 30 l/min
D - Oil pump (flow rate 10 ÷ 30 l/min)
E - Suction filter (25 micron)
F - Solenoid valves assembly
G - Power unit for electrohydraulic control functions
H - Oil pressure control valves assembly
M1 - Pressure gauge scale 0 ÷ 40 bar

Download full manual at youfixthis.com

Tightening torques (in Nm) for bolts, nuts and studs

BOLTS AND NUTS									
Surface finish μ tot.[1]		galvanised 0.125 μ				bright 0.14 μ			
Resistance class	Used new	6G 6.9	8G 8.9	10K 10.9	12K 12.9	6G 6.9	8G 8.9	10K 10.9	12K 12.9
	Measurement	NORMAL METRIC THREAD							
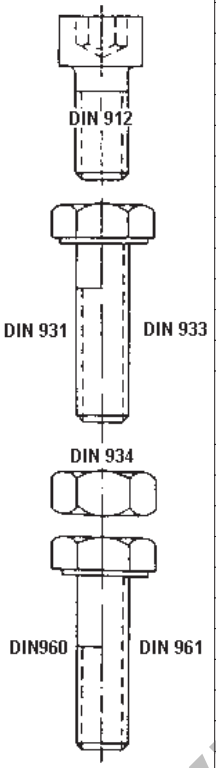 DIN 912 DIN 931 DIN 933	M 4		2.7	3.8	4.6		2.9	4.1	4.9
	M 5		5.5	8.0	9.5		6.0	8.5	10
	M 6		9.5	13	16		10	14	17
	M 8		23	32	39		25	35	41
	M 10		46	64	77		49	69	83
	M 12		80	110	135		86	120	145
	M 14		125	180	215		135	190	230
	M 16		195	275	330		210	295	355
	M 18		270	390	455		290	405	485
	M20		385	540	650		410	580	690
	M 22		510	720	870		550	780	930
	M 24		660	930	1100		710	1000	1200
	M 27		980	1400	1650		1050	1500	1800
	M30		1350	1850	2250		1450	2000	2400
DIN 934 DIN960 DIN 961	FINED METRIC THREAD								
	M 8x1		25	35	42		27	38	45
	M 10x1.25		49	68	82		52	73	88
	M 12x1.25		88	125	150		95	135	160
	M 12x1.5		83	115	140		90	125	150
	M 14x1.5		140	195	235		150	210	250
	M 16x1.5		210	295	350		225	315	380
	M 18x1.5		305	425	510		325	460	550
	M 20x1.5		425	600	720		460	640	770
	M 22x1.5		570	800	960		610	860	1050
	M 24x2		720	1000	1200		780	1100	1300
	M 27x2		1050	1500	1800		1150	1600	1950
	M 30x2		1450	2050	2500		1600	2250	2700

[1] μ tot. The total expansion index for threads, head and/or nut contact surface.

WARNING: Cadmium and copper plated bolts and screws are to be tightened with 25% less torque than that indicated for the corresponding galvanised fasteners.

Studs are to be tightened to half the prescribed torque.

PREVIEW - YOUFIXTHIS.COM

Download full manual at youfixthis.com

LIST OF ALARMS - Lift (eprom vs. D053A)

CODES	MESSAGE on the TESTER	DESCRIPTION
11	this alarm is not recorded	Checksum EPROM program not valid
12	“Position sensor power	Position sensor voltage incorrect
13	“Short-circuit 1 “	High short-circuit (without sol. valves activated)
14	“Short-circuit 2 “	Low short-circuit
15	“Incompatibility.HW-SW ”	“Incompatibility.HW-SW ”
16	“Configuration error”	Configuration error
17	“Console Disconnected”	Control panel not connected
18	“Position Sensor Disconnected”	Position sensor not connected
21	“Short Circuit SVUP 1”	High short-circuit EvUp
22	“Low short-circuit SVUP 2”	Low short-circuit SvUp
23	“SvUp Disconnected 1”	SvUp not connected (static test - Sv off)
24	“SvUp Disconnected 2”	SvUp not connected (dynamic test - Sv on)
25	“SvUp Error“	Unidentified malfunction of SvUp
31	“Short-circuit SvDw 1”	High short-circuit SvDw
32	“Short-circuit SvDw 2”	Low short-circuit SvDw
33	“SvDw Disconnected 1”	SvDw not connected (static test - Sv off)
34	“SvDw Disconnected 2”	SvDw not connected (dynamic test - Sv on)
35	“SvDw Error“	Unidentified malfunction of SvDw
41	“Short-circuit 4WD”	Short-circuit of 4WD sol. valve
42	“Pilot Stage 4WD”	4WD sol. valve driver fault
43	“Sv4WD Disconnected 1”	4WD sol. valve not connected (static test - Sv off)
44	“Sv4WD Disconnected 2”	4WD sol. valve not connected (dynamic test - Sv on)
45	“Sv4WD Error“	Unidentified malfunction of 4WD sol. valve
51	“Short-circuit DIF”	Short-circuit of DIFF sol. valve
52	“Pilot Stage DIF”	DIFF sol. valve driver fault
53	“SvDIF Disconnected 1”	DIFF solenoid valve not connected (static test - Sv off)
54	“SvDIF Disconnected2”	DIFF solenoid valve not connected (dynamic test - Sv on)

PREVIEW - YOUFIXTHIS.COM

Download full manual at youfixthis.com

Main assembly operations involving transmission housing, rear axle, hydraulic lift and engine.

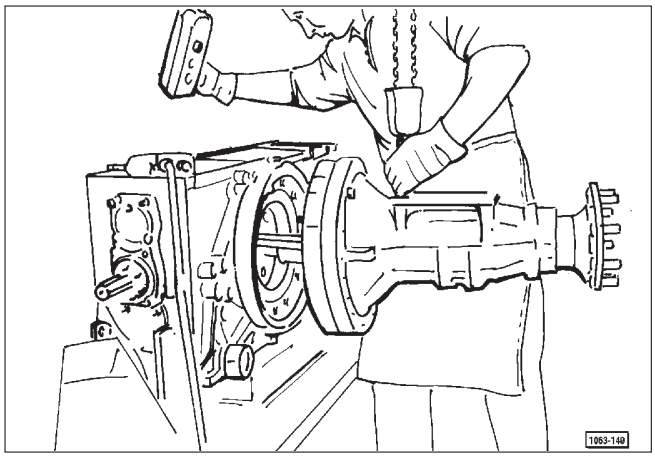

Fig. 66 - **Important:** to facilitate assembly of the trumpet housing, it is good policy to fit centralizer dowels p/n 5.9030.537.0 to the transmission housing. Apply sealant (Pianermetic 510) to the surface of the trumpet housing.

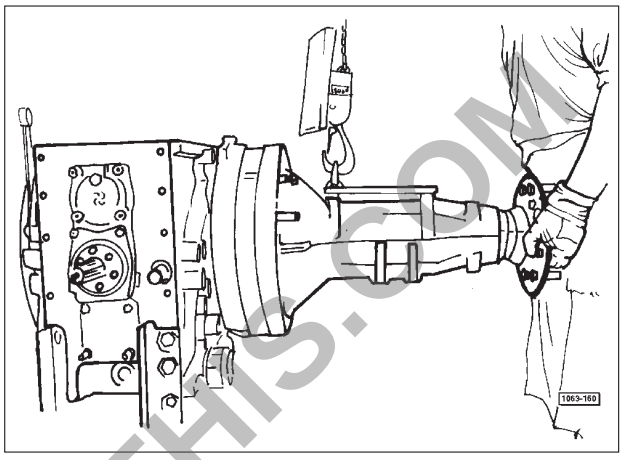

Fig. 67 - Position the trumpet housing using a hoist, taking care to locate the halfshaft in the epicyclic train internally of the housing.

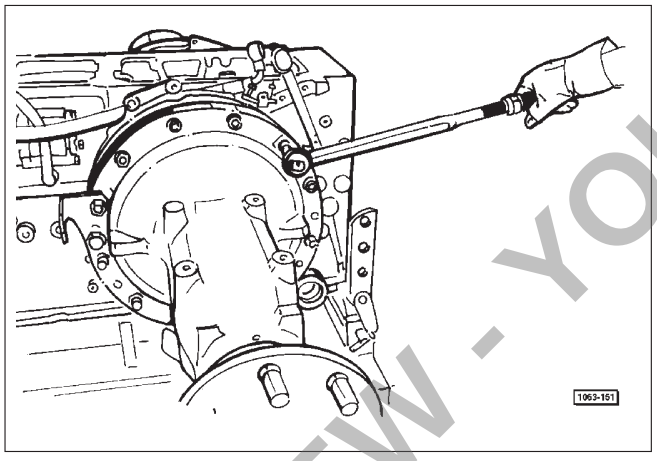

Fig. 68 - Having located the bolts, tighten with a torque wrench to **8.5 kg**, for AGROPLUS 75 - 85 - 95 machines and **17 kgm** for a AGROPLUS 100.

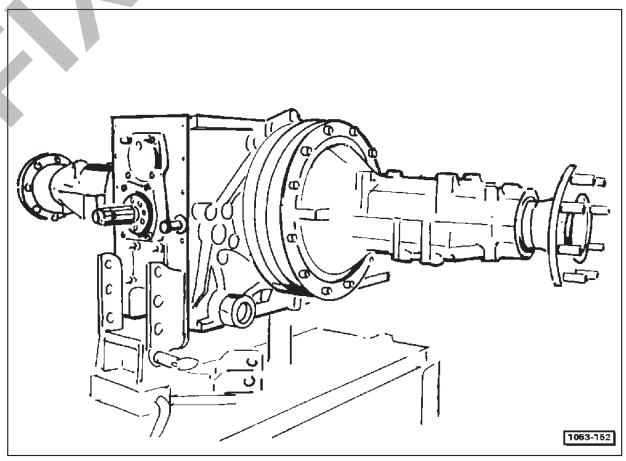

Fig. 69 - Rear transmission housing complete with trumpet housings.

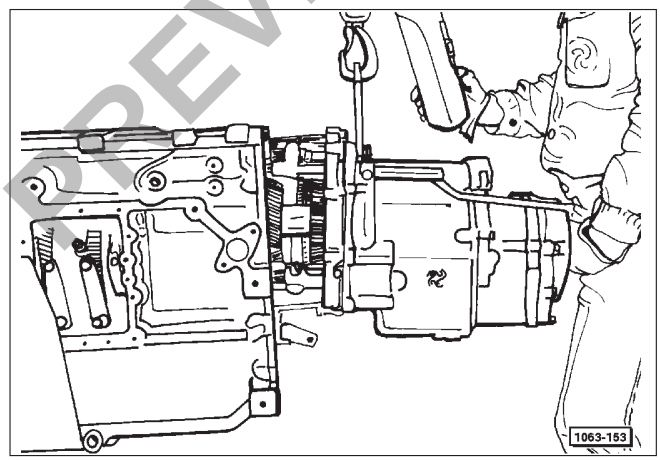

Fig. 70 - Install the Powershift unit and gearshift assembly, complete, in the rear transmission housing. Apply Silastic 738 sealant to one of the mating surfaces before uniting (on machines without Powershift, proceed with fitment as for standard gearshift only).

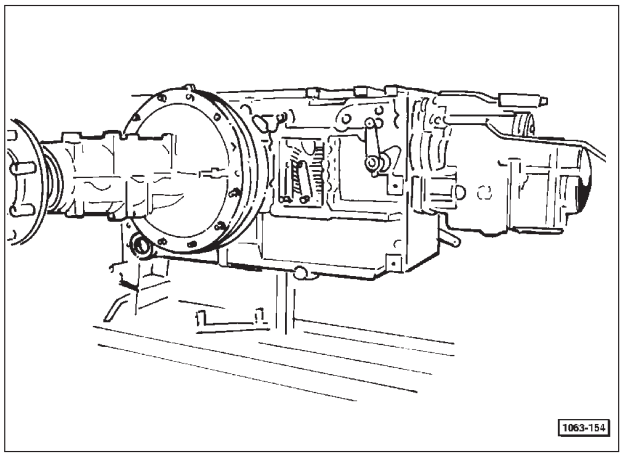

Fig. 71 - Transmission housing complete with Powershift unit.

PREVIEW - YOUFIXTHIS.COM

Download full manual at youfixthis.com

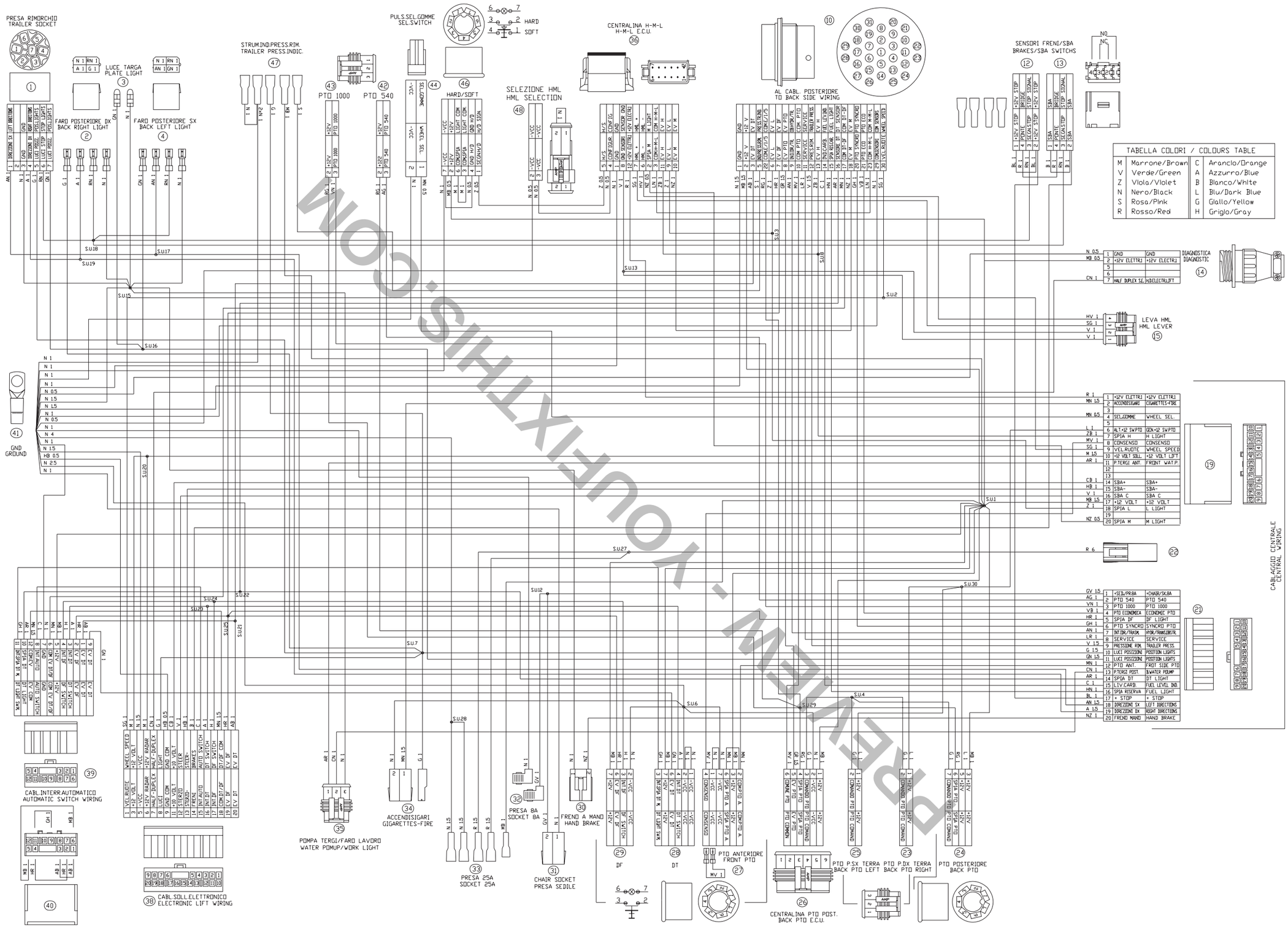

PREVIEW - YOUFIXTHIS.COM

Download full manual at youfixthis.com

TRACTOR WIRING

DIAGRAM 7 - NORMAL UNDER CARPET WIRING (functional)

010.8144.4 dwg.2

Yellow = Delivery line to hydraulic control valve
Blue = Oil from the control valve to “down” valve
Green = Pilot line for valves
Red = Pressure line to lift cylinder

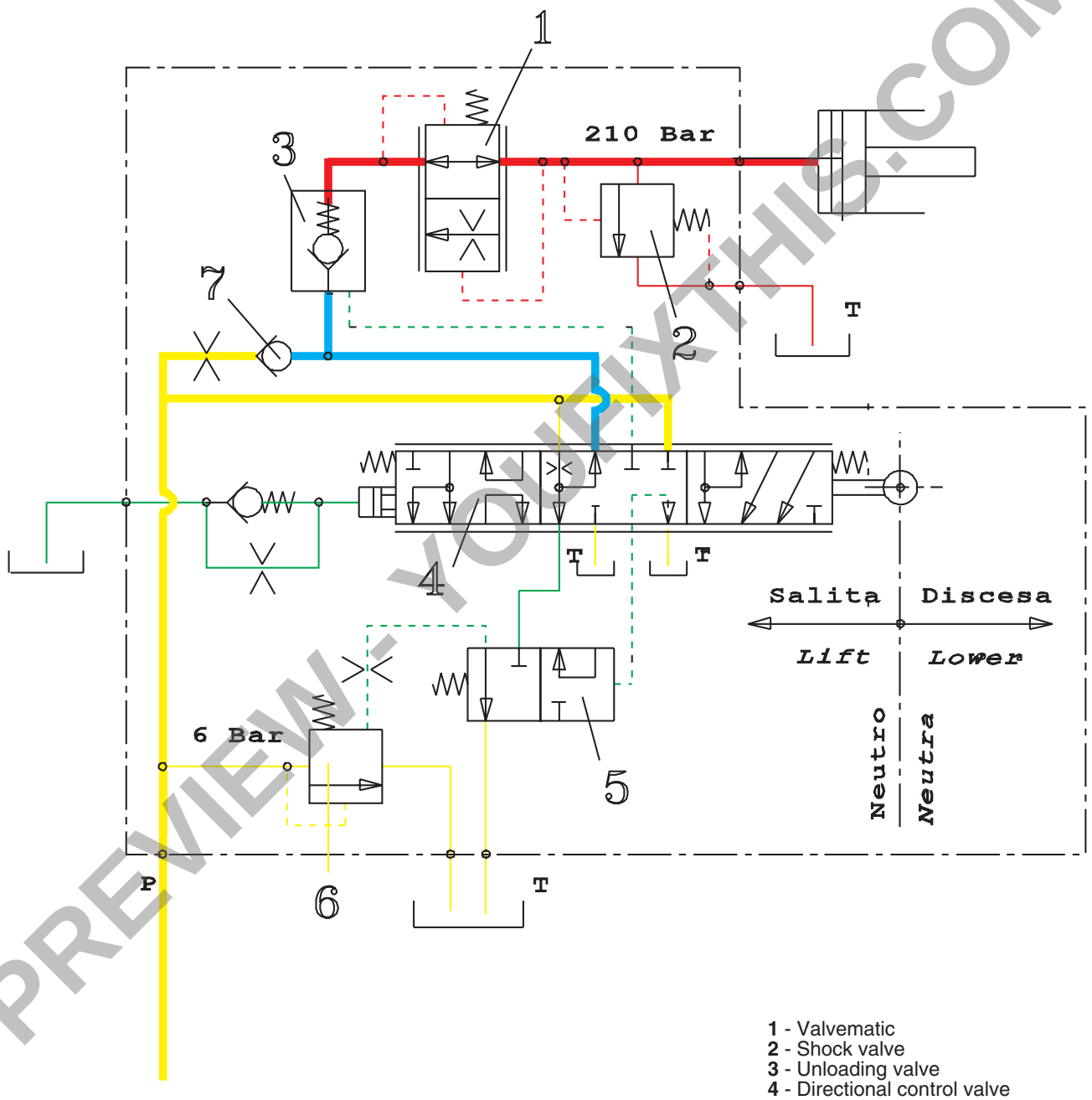

1 - Valvematic
2 - Shock valve
3 - Unloading valve
4 - Directional control valve
5 - Enabling pilot valve
6 - Enabling valve
7 - Down actuator piston
P - Pompe
T - Exhausted

Fig. 8 - Lift system - hydraulic diagram.

PREVIEW - YOUFIXTHIS.COM

Download full manual at youfixthis.com

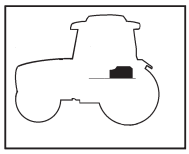

55	“SvDIF Error“	Unidentified malfunction of DIFF solenoid valve
61	“Draft Disconnected”	Draft sensor not connected
64	“Wheel Sensor Disconnected”	Wheel sensor not connected
65	“Radar Disconnected”	Radar not connected
66	“Steering Sensor Disconnected”	Steering sensor not connected
67	“ 5V power “	5V sensor power incorrect
68	“10V power"	10V sensor power incorrect
77	“EEPROM : SPEED“	EEPROM checksum not correct - Parameters menu
78	“EEPROM : CALIB“	EEPROM checksum not correct - Calibrations menu
81	“EEPROM : CTRL“	EEPROM checksum not correct - Control menu
82	“EEPROM : PWM“	EEPROM checksum not correct - PWM menu
83	“EEPROM : DRAFT“	EEPROM checksum not correct - Draft menu
84	“EEPROM : SLIP“	EEPROM checksum not correct - Slip menu
85	“EEPROM : POS“	EEPROM checksum not correct - Position menu
86	“EEPROM : AB“	EEPROM checksum not correct - Antidumping menu
87	“EEPROM : SFCFG“	EEPROM checksum not correct - Draft config. menu
88	“EEPROM : SLCFG“	EEPROM checksum not correct - Slip Config. menu

Example of display of code 23:

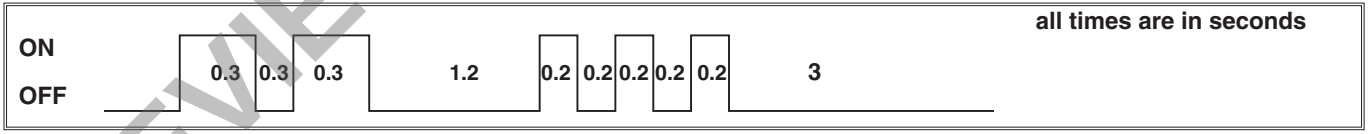

A code number is indicated as follows:
— triangle alight continuously for 2 seconds;
— successive blinks of 0.3 s duration corresponding to tens;
— triangle alight continuously for 1.2 s;
— successive blinks of 0.2 s duration corresponding to units;
— repetition of cycle until alarm deactivates.

PREVIEW - YOUFIXTHIS.COM

Download full manual at youfixthis.com

ESSENTIAL OPERATIONS FOR REFITMENT OF THE REAR P.T.O. ASSEMBLY.

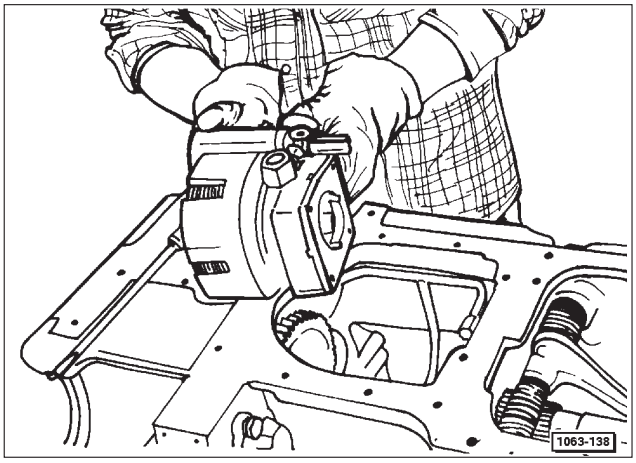

Fig. 17 - Position the complete P.T.O. clutch assembly in the transmission housing.

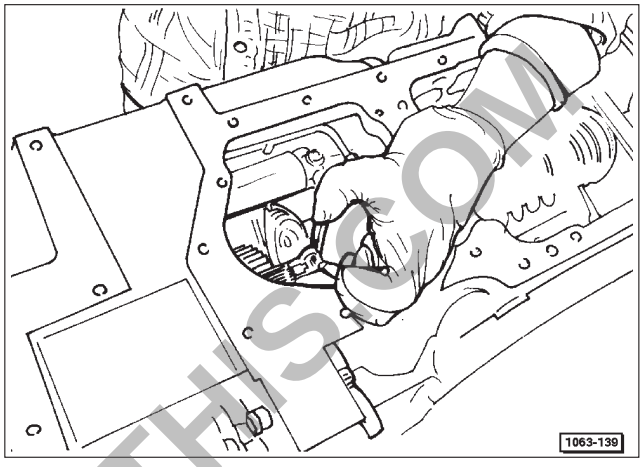

Fig. 18 - Insert the shaft in the PTO group and install the snap ring.

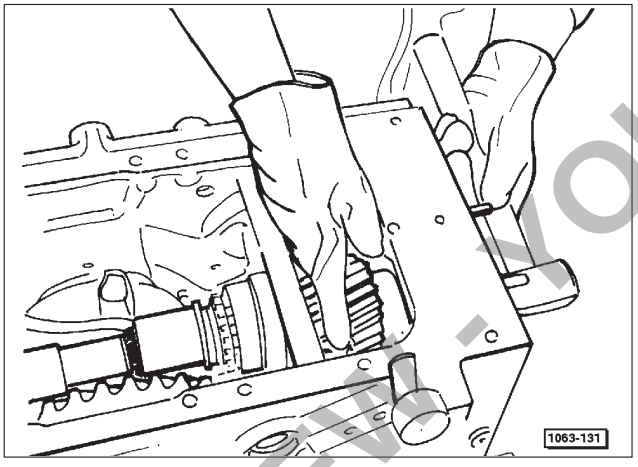

Fig. 19 - Proceed to assemble the components of the P.T.O. final reduction unit (540 - 1000 rev/min). Locate the shaft connecting the P.T.O. clutch to the final reduction, complete with the STANDARD/ECONOMY selector sleeve.

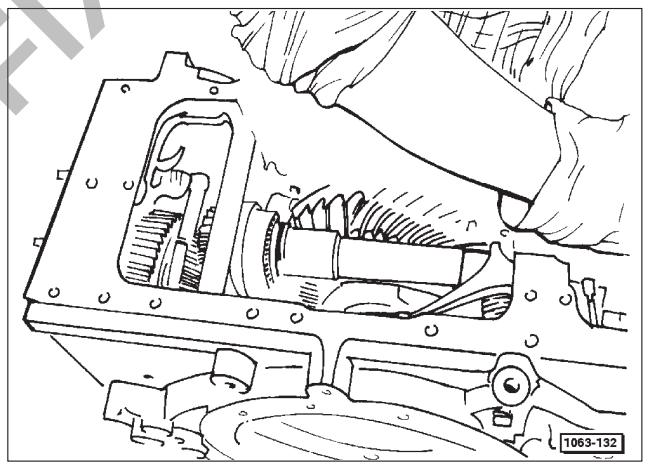

Fig. 20 - Push the drive shaft into the speed reduction assembly, aligning the parts so that the shaft is correctly positioned.

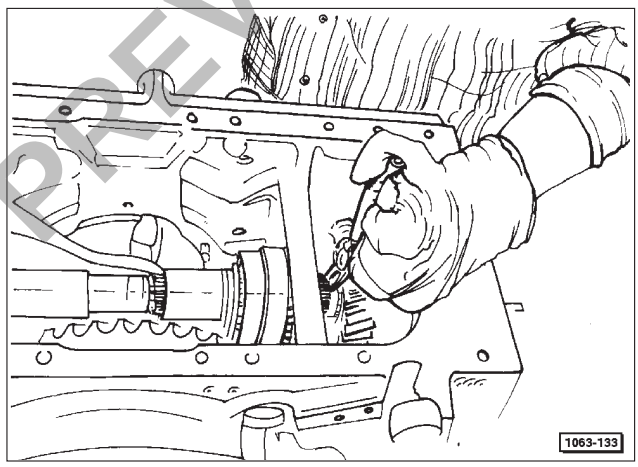

Fig. 21 - Position the spacer in contact with the gear so that the circlip seat of the 540 rpm gear uppermost remains fully exposed.

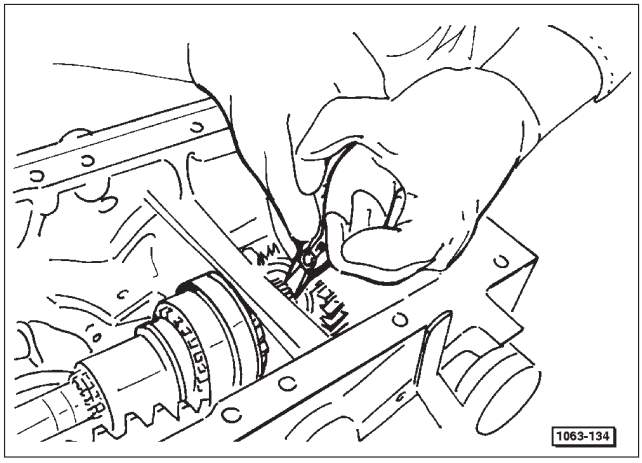

Fig. 22 - Locate the circlip in its seat, using a pair of bent tip ring pliers.

PREVIEW - YOUFIXTHIS.COM

Download full manual at youfixthis.com

List of contents

- Agroplus 75 - 85 - 95 - 100 tractor configurations · · · · · 8
- Dimensions and weights · · · · · 9
- Prescribed Lubricant and fuels · · · · · 10
- Conversion tables · · · · · 11
- Parts · · · · · 12

1 - ENGINE

- Engine · · · · · 13

2 - CLUTCH AND TRANSMISSION

- Gearshift clutch · · · · · 14
  - General characteristics · · · · · 14
  - Technical specifications · · · · · 14
- Installation of the clutch release fork · · · · · 19
- Cecking clutch · · · · · 20
- Adjusting clutch control pedal · · · · · 20
- Bleeding air from the hydraulic circuit · · · · · 20
- Stripping the slave cylinder · · · · · 21
- Inspections · · · · · 21
- Notes on refitment · · · · · 21
- Stripping the master cylinder · · · · · 22
- Inspections and checks · · · · · 23
- Reassembly · · · · · 23
- Fault diagnosis · · · · · 24
- Powershift unit · · · · · 25
  - Technical specifications · · · · · 25
- Fitment of the Powershift unit · · · · · 29
- Adjustment of end float in the Powershift unit · · · · · 31
- Main operazions involved in assembly of Powershift unit · · · · · 32
- Spring specifications · · · · · 42
- Fault diagnosis · · · · · 42

3 - TRANSMISSION

- Technical specifications · · · · · 43
- Transmission configurations with 5 speed gearbox · · · · · 44
- Gearbox removal · · · · · 59
- Stripping the gearbox · · · · · 60
- Examining parts removed · · · · · 61
  - Gearbox case · · · · · 61
  - Shafts · · · · · 61
  - Gears · · · · · 61
  - Synchronizers · · · · · 61
  - Bearings · · · · · 61
  - Installing circlips of variable thickness · · · · · 62
  - Nominal dimensions of gearbox bushes · · · · · 62
  - Installing the intermediate shaft bearing · · · · · 63
  - Adjusting secondary shaft end float for the 5-speed gearbox · · · · · 64
- Shimming the range gear input shaft on tractors without Powershift transmission · · · · · 65
  - Calculating shim thickness · · · · · 66
- Shimming the range gear input shaft on tractors with Powershift transmission · · · · · 67
  - Calculating shim thickness · · · · · 68
- “Powershuttle” electro-hidraulic shuttle control · · · · · 69
  - Updating the EPROM of the Control unit · · · · · 69
  - Powershuttle self-diagnostics tester · · · · · 71
  - Installation of the shuttle unit · · · · · 75
  - Assembly of the compound gears · · · · · 76
- Adjustment of the shuttle unit · · · · · 76

PREVIEW - YOUFIXTHIS.COM

Download full manual at youfixthis.com

- Setting the angle of the ASM sensor positioning plate 142
- Fitting the steering angle sensor 142
- Removing the differential unit from the front axle 143
- Stripping the front differential lock clutch 143
- adjustment of front axle bevel gear pair on machines with ASM System 144
- Installation of differential unit in front axle 146
- Assembly and positioning of the ASM System brake switches 146
- Four wheel drive engagement clutches for machines with ASM System 147
- Technical specifications 147
- Front and rear differential lock clutches for machines with ASM System 148
- Technical specifications 148

5 - VEHICLE

- Brakes 149
  - General characteristics 149
  - Technical specifications 149
- Hydraulic pump 150
  - Disassebly and checking procedure 150
- Assembly of brake master cylinder 152
- Checking the discs of the 2WD and 4WD front brakes and rear brakes 153
- Adjusting service brake pedals 153
- Checking parking brake pads 154
- Parking brake control lever overall travel 154
- Bleeding air from the brake hydraulic system 155
- “Separate Brakes” valve 156
- Fault diagnosis 160
  - Technical specifications 161
- Electronic power-lift 162
- Electronic control unit: operator panel 162
  - Operation 165
  - Main control switch 165
  - Stop switch 165
- ALL ROUND TESTER (1st version) 166
- Resident diagnostics 171
- AUTO-MAN procedure for entering the wheel constant relative to a tyre not listed in the table 175
  - Setting the maximum lift height 175
- Setting up the draft control sensor 175
- Setting up the steering sensor 176
- Verify the operational efficiency of the system's electrical components 176
- Multifunction control handset mounted to seat armrest 176
- External buttons 176
- Position control sensor 176
- ASM System 176
- Selecting the control type 177
- Setting the maximum lift height 177
- Lock/Unlock pushbutton 177
- Ground-operated pushbutton controls 178
- Main control knob 178
- Lowering speed adjustment knob 178
- Sensitivity adjustment knob 178
- Up/Down indicator lights 178
- Alarm warning light 178
- Electronic lift type ELCII 179
- Control panel 180
- Lift operating controls 181
- Lift setting controls 182
- Safety features 182
- Oscillation damping during transport 183
- Operating conditions 183
- Auxiliary service control switches 183
- Procedure for setting up the electronic lift 184
- RADAR / No RADAR 184
- Entering the type of tyre 184
- ALL ROUND TESTER (2nd version) 186

PREVIEW - YOUFIXTHIS.COM

Download full manual at youfixthis.com

INSPECTIONS AND CHECKS

Clean bearings and the other parts carefully, then dry using compressed air. Carefully examine the bearings turning them slowly, if the bearing is sound no vibrations, noise nor slight jam-ups shall be felt.

Carefully examine bearing race and rolling member conditions ensuring no scoring, marking, grinding signs due to foreign matter abrasion are noticed, otherwise replace the bearing.

WARNING: Should a bearing be no more serviceable, both the internal and the external bearings must be replaced.

Make sure the wheel shaft has suffered no damage and threading is whole, replace if required.

Be sure no signs of oxidation are visible on the wheel shaft, if so remove with very fine abrasive paper.

Check the shaft for either warp or damage, if so replace the shaft. Carefully inspect the axial bearing making sure no grinding, scoring or marking are evident neither on the rolling members nor on the bearing races, otherwise replace the worn parts.

Check side axle upper and lower bushes **B** for wear, ascertaining they still show evidence of the purpose-made indentations, otherwise replace.

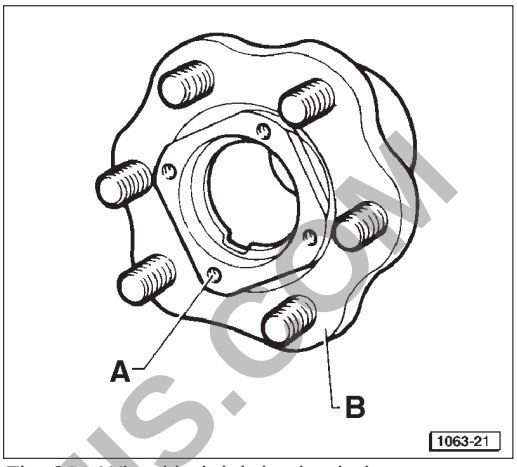

Fig. 21 - Wheel hub lubricating hole.
A - Cover fixing holes
B - Wheel hub

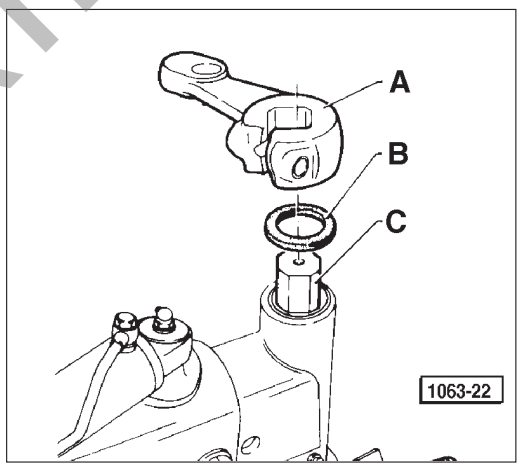

Fig. 22 - Removing the steering lever.
A - External steering lever
B - Gasket
C - Wheel shaft

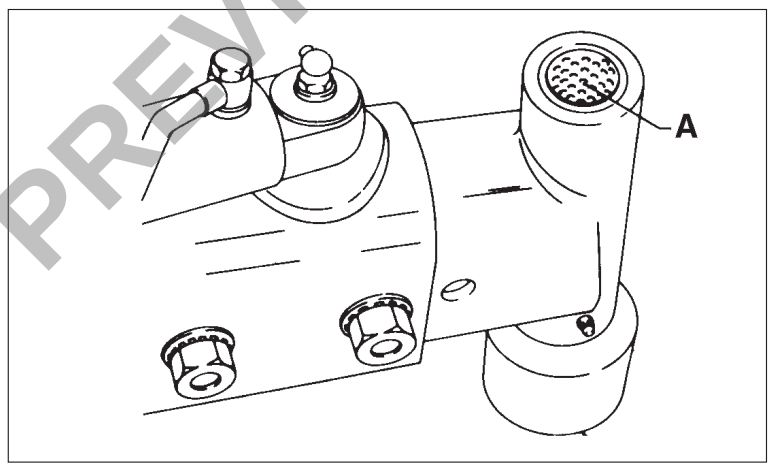

Fig. 24 - Wheel pivot bushes.
A - Clearance hole

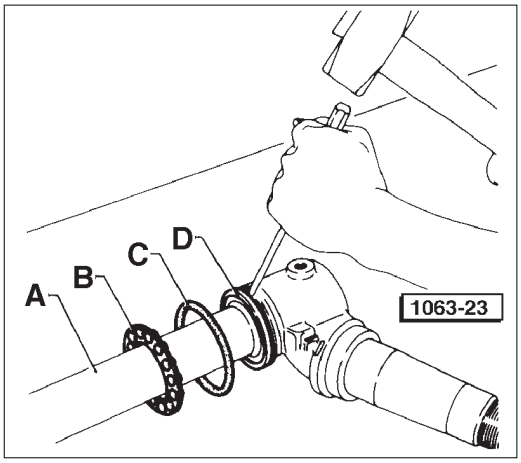

Fig. 23 - Removing the wheel pivot axial bearing.
A - Wheel shaft
B - Axial bearing
C - O-ring
D - Axial bearing race

PREVIEW - YOUFIXTHIS.COM

Download full manual at youfixthis.com

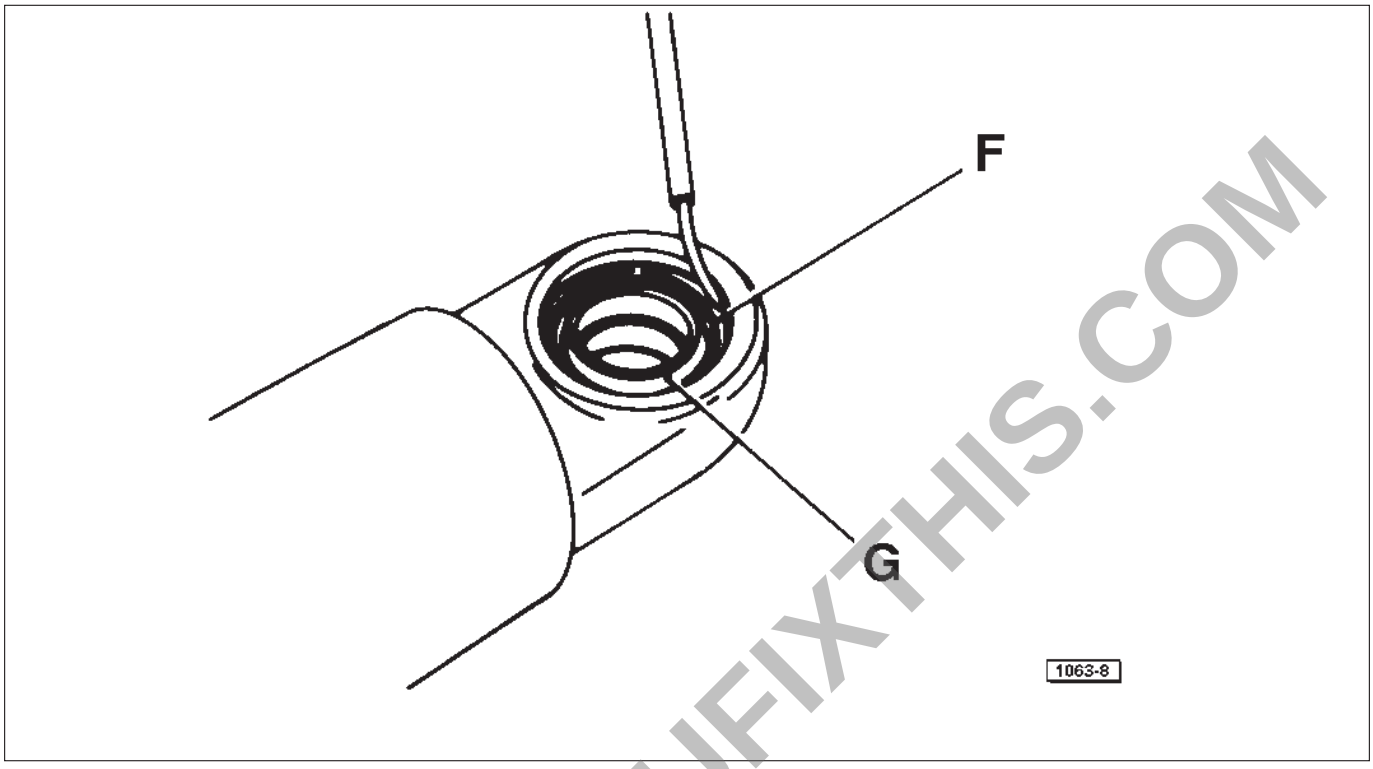

Fig. 11 - Ball joint.
F - Circlip
G - Ball joint

Servicing

Verify the integrity of the O-ring and wiper seals. Replace any components showing signs of wear or damage.

Inspect the sliding surfaces both of the rod and of the cylinder for signs of scoring, heavy wear or any kind of damage; if any of these are discernible, replace the affected component.

Check for correct operation of the ball end, ensuring that it betrays no signs of heavy wear, scoring or oxidation, the presence of which dictates replacement.
Lubricate the wiper seals and ball end with care.

Reassemble the cylinder, repeating the dismantling operations in reverse sequence.

PREVIEW - YOUFIXTHIS.COM

Download full manual at youfixthis.com

PREVIEW ONLY

You're viewing 18 of 370 pages

The full manual includes:

- All 370 pages, complete
- Searchable PDF (find any keyword)
- No watermarks
- Instant download
- Print-ready quality

GET FULL MANUAL NOW

Deutz-fahr Agroplus 75, Agroplus 85, Agroplus 95, Agroplus 100 Service Manual

Scan or click anywhere
youfixthis.com

Click anywhere on this page to get the full manual