CONTROLS AND INSTRUMENTS

1. ***Tool box.***

2. ***Splitter control lever*** (see page 23)

3. ***Instrument panel*** (see page 16).

4. ***Master clutch pedal.***

5. ***Parking brake lever*** (red button):
   — Up = On;
   — Down = Released

NOTE

*Depress red button to release parking brake lever **5**.*

6. ***Reverser lever*** *(see page 74).*

7. ***Seat suspension ride control*** (see page 43)

8. ***Lift response adjuster lever*** (see page 30)

9. ***Differential lock pedal.***

10. ***Variospeed sensitivity control knob*** (see page 28).

11. ***Remote control valve levers*** (see page 39).

12. ***P.T.O. clutch lever*** (see page 24).

13. ***Lift-O-Matic*** (see page 29)

14. ***Throttle lever.***

15. ***Hydraulic lift controls*** (see page 30).

16. ***Accelerator pedal.***

17. ***Brake pedals.***

18. ***Control board*** (see page 19)

19. ***Gear lever*** (see page 23)

20. ***Steering lock*** (see page 43).

PREVIEW - YOUFIXTHIS.COM

Download full manual at youfixthis.com

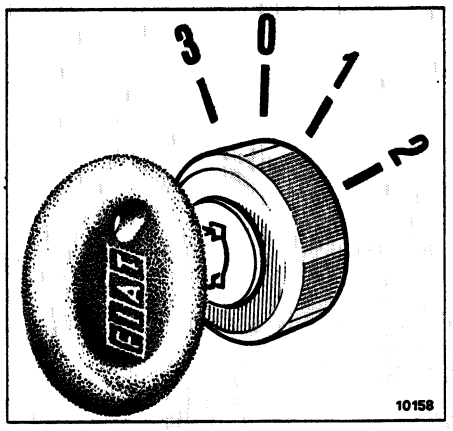

Starter Switch

0. Hazard warning lights and single-pole socket (key removable).

1. On.

2. Starting (when released key springs back to position ***1***).

3. Parking lights (key removable).

⚠ DANGER ⚠

— *Never run tractor in a closed area.*

— *Ensure all controls are in neutral position before starting.*

— *Operate controls from driver's seat only.*

— *Switch off engine before carrying out any maintenance operations.*

— *Use steps and grab handles for getting on and off the tractor.*

— *Ensure that guards are correctly mounted.*

— *During use on the road transfer, always signal when stopping, turning or reducing speed.*

— *Use appropriate slow moving vehicle symbols when operating on public roads.*

ENGINE STARTING

a. With tractor on level ground and lift arms lowered, turn starter switch key to ***1***. In this position engine oil level, rear transmission and lift oil level, transmission oil level, engine coolant level, brake fluid level and engine oil pressure indicator sending unit efficiency may be checked by the operator. Green go-ahead light should light up when all conditions are normal. If red general warning light, any indicator and buzzer come on signalling malfunction, rectify as necessary.

b. Declutch to activate starter inhibitor switch.

c. Push in shut-off control ***H*** (page 19).

PREVIEW - YOUFIXTHIS.COM

Download full manual at youfixthis.com

QUICK REFERENCE INDEX

	Page
Service	4
Tractor Identification Data	7
Safety Precautions	8
Controls and Instruments	15
Operation	20
Guide to Lift Operation	31
Servicing Schedule	50
Electrical System	56
Wiring Diagram	59
Specification	60
***Four-wheel Drive** Version*	67
***Twenty-four Speed** Version*	72
***Reverser** Version*	74
***Twin Tyre** Version*	77
***Heated and Ventilated Cab** Version*	79
***Air Conditioned Cab** Version*	87
Tractor Storage	94
Contents	95
Servicing Chart	*Inside back cover*

PREVIEW - YOUFIXTHIS.COM

Download full manual at youfixthis.com

Safety Precautions

THIS SYMBOL IS YOUR SAFETY ALERT SIGN

It means:

«ATTENTION! - DANGER! YOUR SAFETY IS INVOLVED».

Read and heed all safety instructions carrying the signal words ***NOTE, CAUTION*** and ***DANGER***.

GENERAL

■ Your tractor was designed with safety very much in mind. However, there is no real substitute for caution and attention in preventing accidents. Once an accident has happened it is too late to think about what you should have done.

■ Remember that your tractor has been designed exclusively for agricultural use. Any other application must first be authorized by the manufacturer.

■ Read this manual thoroughly before attempting to start, operate, service or refuel the tractor. A few minutes reading will save time later.

■ Read and heed all machine-mounted safety decals before refueling or servicing the machine and replace any missing decals.

■ Tractor should be operated only by responsible persons suitably trained and duly authorized.

■ Keep a first aid kit handy.

■ Do not work with loose garments that could get caught in moving parts. Check that all rotating parts connected to the PTO shaft are well shielded.

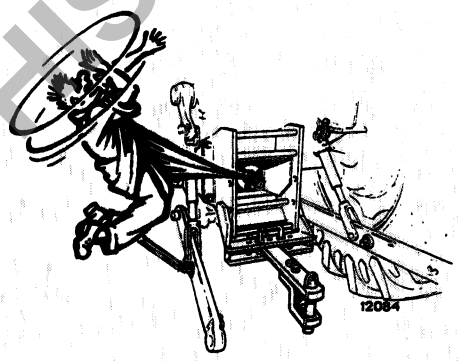

PREVIEW - YOUFIXTHIS.COM

Download full manual at youfixthis.com

***NOTE** - After extended inactivity or when starting in cold climates, prime fuel pump through 20 strokes and run engine for 5 to 10 seconds with injection pump with fuel shut-off condition.*

d. Turn starter switch key to position ***2*** and move throttle lever to mid-stroke as soon as engine fires.
Release key and bring engine speed to 1000 rpm.
With engine running the operator may check: brake fluid level, engine coolant level, generator and circuit efficiency, engine oil pressure and air cleaner restriction.
In case of malfunction red general warning light, unit indicators light and buzzer come on.

NOTE

*If the engine fails to start, red general warning light, generator and circuit efficiency indicator light, engine oil pressure indicator light and buzzer come on Return starter switch key to position **0** to extinguish the light.*

CAUTION

Before accelerating engine or starting tractor, run engine at 1000 rpm no load for 30 seconds to ensure turbocharger lubrication.

STARTING IN COLD WEATHER

NOTE

Prior to starting in cold weather cover radiator to warm up coolant quickly Subsequently, remove covering. Also note the following points:

— Do not attempt repeated engine starts for more than 15 seconds unless the engine shows a tendency to start, in which case attempt may be extended to 30 seconds;

— Wait at least one minute between attempts;

— To preserve battery charge, do not make more than six attempts.

CAUTION

*To prevent Diesel fuel from waxing in freezing weather, mix fuel with **FIAT "Diesel Mix"** antifreeze (or similar product) as directed on container.*

***FIAT "Diesel Mix"** must be added before fuel waxes as once this starts nothing can be done. Pour antifreeze into tank and then add fuel.*

***FIAT "Diesel Mix"** ensures optimum fuel supply without reducing performance even at temperatures under −20°C*

PREVIEW - YOUFIXTHIS.COM

Download full manual at youfixthis.com

The swinging drawbar may be adjusted for:

— Height, by overturning the drawbar and positioning fork upward or downward.

— Check lateral swing by means of U-pin ***A***.

Drawbar fork positions with respect to the P.T.O. shaft obtainable by implementing the foregoing adjustments are shown above.

To correctly couple implements to the P.T.O., ensure that the towbar fork faces downward.

⚠ *CAUTION* ⚠

*Lockplate **B** prevents pin **C** from slipping out of the fork. When using drawbar in overturned position move lockplate to uppermost side. To remove pin, raise and move lockplate sideways as shown.*

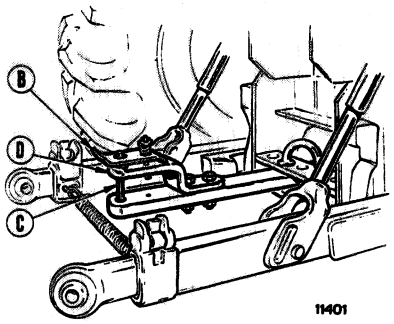

Drawbar with bolted-on end.
Drawbar has bolted-on end instead of standard welded end. Top end ***D*** of drawbar fork can be removed, thereby allowing tractor coupling with drawn implements featuring a different system of hitching.

DRILLED CROSSMEMBER
This is used for towing implements and agricultural machine even if they are driven by the P.T.O. It is not suitable for implements and machines which heavily load the drawbar because of the risk of tractor pitching.

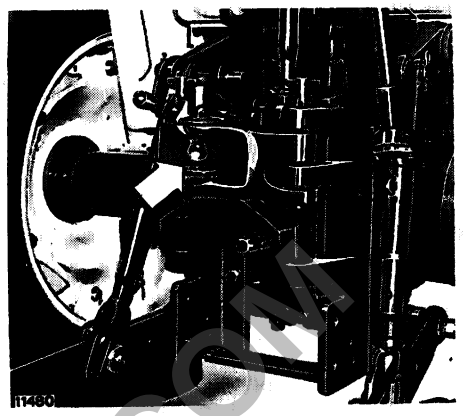

ROCKINGER JAW HOOK

The jaw hook may pivot about its longitudinal axis and incorporates a safety type automatic hitch and lock-up device.

To facilitate top link connection, hook may be tilted sideways and clamped in position through the latch on inside of hook.

This device is not adjustable for height and may be fitted together with the swinging drawbar.

PREVIEW - YOUFIXTHIS.COM

Download full manual at youfixthis.com

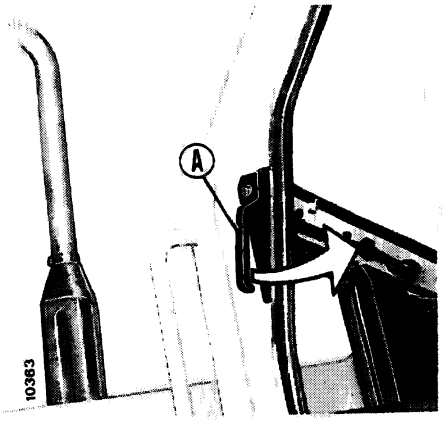

DOORS

To open from outside. Unlock and pull lever ***A.***

To open from inside. Push lever ***B*** forward.

To lock from outside. Doors may be locked from outside using key provided.

To lock from inside (on right only). Close door and pull lever ***B*** back. Doors may also be locked in open position by inserting stays ***C*** in slots on inside of lock.

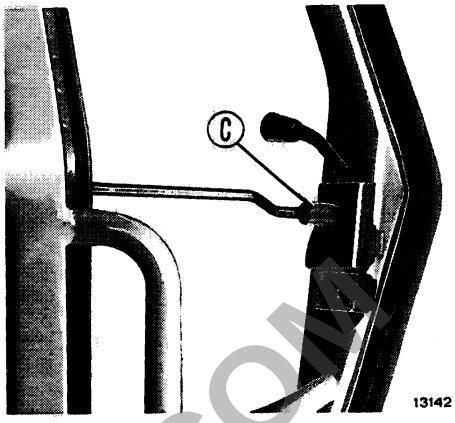

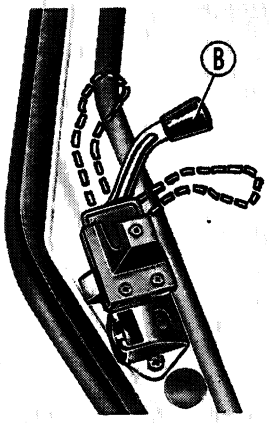

BACK LIGHT

To open, depress button on lever ***D*** and turn.
Glass may be held open through telescopic arms ***E***.

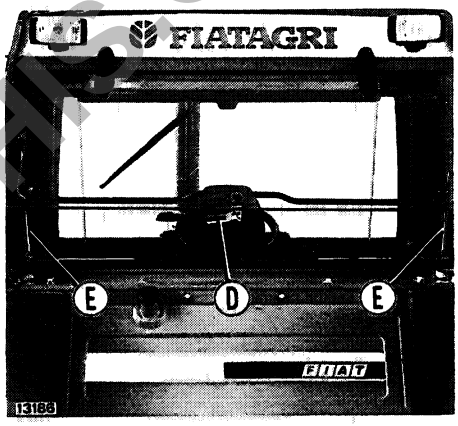

PREVIEW - YOUFIXTHIS.COM

Download full manual at youfixthis.com

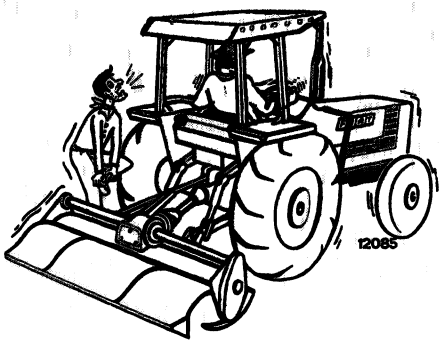

■ Never operate a PTO driven implement without first ensuring that no-one is on or too near the machine. Check that all rotating parts connected to the PTO shaft are well shielded.

■ Install rear weights when using front lifting equipment.

STOPPING

■ Never leave equipment in the raised position with the tractor stationary.

■ Return gear lever to neutral, disengage PTO, apply parking brake and stop the engine before leaving the tractor seat.
Always remove starter switch key before leaving tractor unattended.

■ Park tractor on level ground if possible, engage a gear and apply parking brake.
On gradients, apply parking brake and first gear uphill and reverse gear downhill. For greater safety, use the optional chock, especially with a trailer on tow.

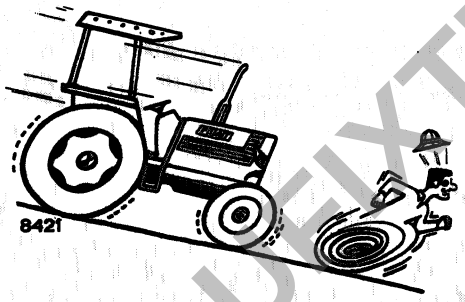

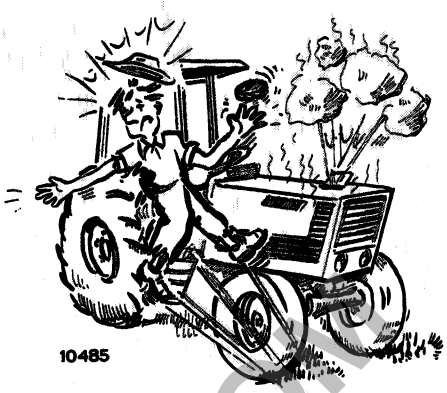

MAINTENANCE

■ Allow engine to cool down before removing radiator cap; with engine shut off, slowly turn cap to release pressure before removing cap completely.

■ Disconnect the battery ground lead before starting any work on the electrical system.

PREVIEW - YOUFIXTHIS.COM

Download full manual at youfixthis.com

Thermostarter tractors

—. Carry out operations ***a, b*** and ***c,*** indicated above.

— Turn starter switch to position ***1***.

— Depress button ***P*** (see page 19) and hold for 10 to 15 seconds.

— Turn starter switch to position ***2*** holding button ***P*** depressed for a further 10 to 15 seconds.

— After firing, release both starter switch and button. If after two or three attempts engine fails to start and considerable smoke is noticed, try again with the thermostarter off.

Start-Pilot Tractors

Start-Pilot is activated only upon energizing starter.

— Carry out operations ***a, b*** and ***c*** above.

⚠ CAUTION ⚠

Use the start-pilot only when strictly necessary (below −15°C).
With start-pilot activated, engine starting should occur at first attempt. If engine fails to start, do not insist, but turn to service network.

— Turn starter switch to position ***2***.

— Depress button ***P***, page 19.

— After firing release both the starter switch and the button.

STARTING THE TRACTOR

— Depress the master clutch pedal and engage the desired gears (see page 23).

— Increase engine speed.

— Release the parking brake and slowly release the clutch pedal.

⚠ CAUTION ⚠

Do not operate tractor for long periods at governed speeds when travelling at speed below 7.4 kph (normal range 2nd).

STOPPING THE TRACTOR

— Reduce engine speed.

— Depress the master clutch pedal and brake.

When the tractor comes to rest, return both gear levers to neutral, release the clutch pedal and apply parking brake.

STOPPING THE ENGINE

⚠ CAUTION ⚠

Prior to stopping the engine, run at no load, 1000 rpm for at least 3 minutes in order that the turbocharger may cool down.

— Pull out shut-off control ***H*** (page 19). Red general warning light, generator and circuit efficiency indicator light and buzzer come on. This is a normal condition and is not evidence of malfunction.

— When the engine comes to rest return the starter switch to position ***0*** or ***3*** if the parking lights are to be left on.

PREVIEW - YOUFIXTHIS.COM

Download full manual at youfixthis.com

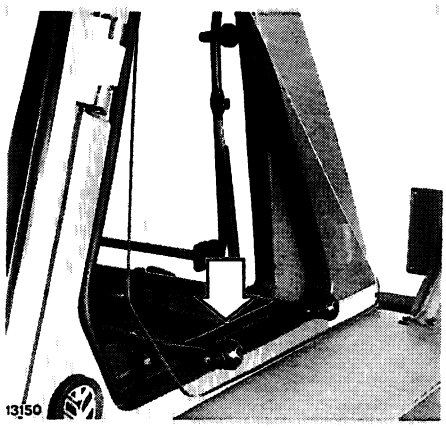

OPENING SIDE WINDOWS

To open, turn handle upward.

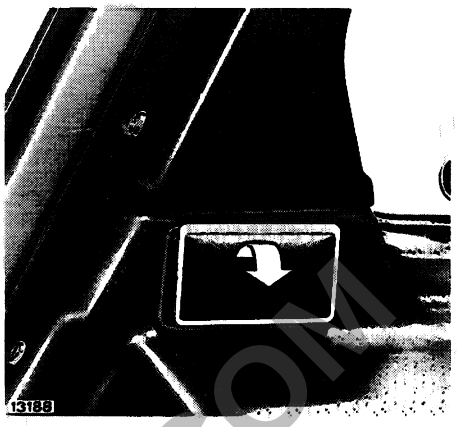

ASHTRAY

To open tilt lid down. To clean depress stubber and withdraw complete ashtray.

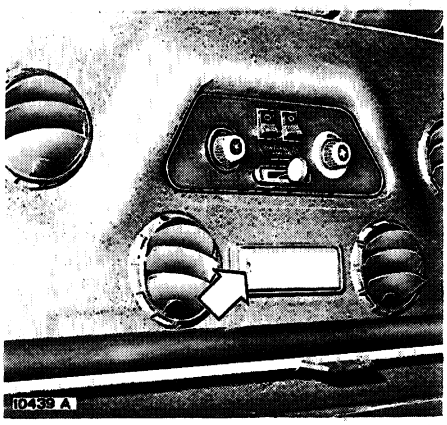

CAB INTERIOR LIGHT

To switch on, depress lens as shown and depress again to switch off.

HATCH COVER

To open, turn handle ***H***.

Telescopic arms hold cover open.

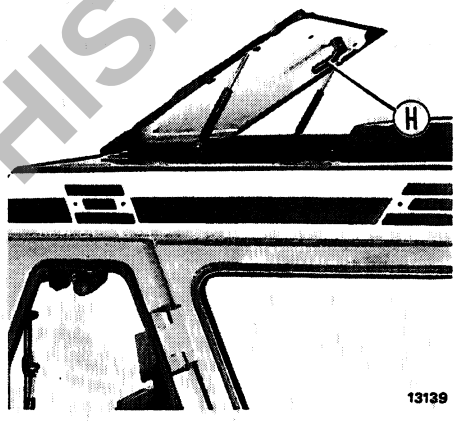

PREVIEW - YOUFIXTHIS.COM

Download full manual at youfixthis.com

PREVIEW ONLY

You're viewing 10 of 105 pages

The full manual includes:

- All 105 pages, complete
- Searchable PDF (find any keyword)
- No watermarks
- Instant download
- Print-ready quality

GET FULL MANUAL NOW

New Holland 160-90 Turbo, 180-90 Turbo Operator Manual

Scan or click anywhere
youfixthis.com

Click anywhere on this page to get the full manual