FIAT KOBELCO

COMPACT LINE

E80 EVOLUTION

WORKSHOP MANUAL
ENGLISH

Print N. 604.13.253

PREVIEW - YOUFIXTHIS.COM

Edition: 04/2003
English - Printed in Italy

Printed by Studio ti

www.fiatkobelco.com

FIAT KOBELCO

EVOLVING TECHNOLOGY

Download full manual at youfixthis.com

INDEX

SPECIFICATIONS

Section 1 - Preliminary remarks
Section 2 - Specifications
Section 3 - Attachment dimensions

MAINTENANCE

Section 11 - Tools
Section 12 - Standard maintenance time schedule
Section 13 - Maintenance standards and test procedures

SYSTEM

Section 21 - Mechatro control system
Section 22 - Hydraulic system
Section 23 - Electrical system
Section 24 - Components system
Section 25 - Air-conditioner system

DISASSEMBLING

Section 31 - Disassembling and assembling
Section 32 - Attachments
Section 33 - Upper swing body
Section 34 - Travel frame

TROUBLESHOOTING

Section 41 - Mechatro control
Section 42 - Hydraulic system
Section 43 - Electrical system
Section 44 - Engine

ENGINE

Section 51 - Engine

PREVIEW - YOUFIXTHIS.COM

15303 60413253

Download full manual at youfixthis.com

SAFETY PRECAUTIONS

WARNING

The proper and safe lubrication and maintenance for this machine, recommended by Distributor, are outlined in the OPERATOR'S MANUAL for the machine.
Improper performance of lubrication or maintenance procedures are dangerous and could result in injury or death. Read and understand the MANUAL before performing any lubrication or maintenance.

The serviceman or mechanic may be unfamiliar with many of the systems on this machine. This makes it important to use caution when performing service work. A knowledge of the system and or components is important before the removal or disassembly of any component.

Because of the size of some of the machine components, the serviceman or mechanic should check the weights noted in this manual. Use proper lifting procedures when removing any components. Weight of components table is shown in the section; SPECIFICATIONS.

The following is a list of basic precautions that must always be observed.

1. Read and understand all Warning plates and decal on the machine before Operating, Maintaining or Repairing this machine.

2. Always wear protective glasses and protective shoes when working around machines. In particular, wear protective glasses when using hammers, punches or drifts on any part of the machine or attachments. Use welders gloves, hood/goggles, apron and the protective clothing appropriate to the welding job being performed. Do not wear loose fitting or torn clothing. Remove all rings from fingers, loose jewelry, confine long hair and loose clothing before working on this machinery.

3. Disconnect the battery and hang a "Do Not Operate" tag in the Operators Compartment. Remove ignition keys.

4. If possible, make all repairs with the machine parked on a level, hard surface. Block the machine so it does not roll while working on or under the machine. Hang a "Do Not Operate" tag in the Operators Compartment.

5. Do not work on any machine that is supported only by lift, jacks or a hoist. Always use blocks or jack stands, capable of supporting the machine, before performing any disassembly.

WARNING

Do not operate this machine unless you have read and understand the instructions in the OPERATOR'S MANUAL. Improper machine operation is dangerous and could result in injury or death.

6. Relieve all pressure in air, oil or water systems before any lines, fittings or related items are disconnected or removed. Always make sure all raised components are blocked correctly and be alert for possible pressure when disconnecting any device from a system that utilizes pressure.

7. Lower the bucket, dozer, or other attachments to the ground before performing any work on the machine. If this cannot be done, make sure the bucket, dozer, ripper or other attachment is blocked correctly to prevent it from dropping unexpectedly.

8. Use steps and grab handles when mounting or dismounting a machine. Clean any mud or debris from steps, walkways or work platforms before using. Always face to the machine when using steps, ladders and walkways. When it is not possible to use the designed access system, provide ladders, scaffolds, or work platforms to perform safe repair operations.

9. To avoid back injury, use a hoist when lifting components which weigh 20 kg (45 lbs) or more. Make sure all chains, hooks, slings, etc., are in good condition and are the correct capacity. Be sure hooks are positioned correctly. Lifting eyes are not to be side loaded during a lifting operation.

10. To avoid burns, be alert for hot parts on machines which have just been stopped and hot fluids in lines, tubes and compartments.

11. Be careful when removing cover plates. Gradually back off the last two capscrews or nuts located at opposite ends of the cover or device and carefully pry cover loose to relieve any spring or other pressure, before removing the last two capscrews or nuts completely.

12. Be careful when removing filler caps, breathers

15303 60413253

Download full manual at youfixthis.com

PREVIEW - YOUFIXTHIS.COM

6. SPECIFICATIONS AND PERFORMANCE

6.1 SPEED AND CLIMBING CAPABILITY

Item \ Model	E80
Slewing speed	12.5rpm
TRAVEL SPEED (1st speed/2nd speed) km/h	3.1 / 5.5
Gradeability %(degree)	70 (35)

6.2 ENGINE

Engine model	ISUZU 4JG1 NABGA
Type	Water-cooled 4-cycle direct injection type engine
Number of cylinders－Bore×Stroke	4－95.4mm×107mm (3.76in×4.21in)
Total displacement	3,059cc (187cu·in)
Rated output / Rotation speed	40.5kW (55PS) / 2,100rpm
Maximum torque / Rotation speed	19.1kgf·m (138 lbf·ft) / 1,800rpm
Starter	24V / 3.2kW
Alternator	24V / 30A

6.3 HYDRAULIC COMPONENTS

Hydraulic pump	Variable displacement axial piston+gear pump
Hydraulic motor (slewing)	Axial piston motor
Hydraulic motor (travel)	2-speed axial piston motor
Control valve	6-spool control valve
Cylinder (Boom, Arm, Swing and Bucket)	Double action cylinder
Oil cooler	Air-cooled type

6.4 WEIGHT

Unit : kg (lb)

	Grouser shoe	Rubber shoe
Fully equipped weight	8,040 (17,720)	7,970 (17,570)
Upper structure	3,930 (8,660)	
Lower machinery (With 450mm (17.7in) shoe)	2,900 (6,390)	2,830 (6,240)
Attachment [Boom+1.80m(5ft-11in) Arm+0.28m^3(0.37cu·yd)Bucket]	1,060 (2,340)	

PREVIEW - YOUFIXTHIS.COM

Download full manual at youfixthis.com

1. GENERAL PRECAUTIONS FOR MAKING REPAIRS



1.1 PREPARATION BEFORE DISASSEMBLING

(1) Knowledge of operating procedure
Read Operator's Manual carefully to understand the operating procedure.

(2) Cleaning machines
Clean machines of soil, mud, and dust before carrying into the repair shop.
Carrying a soiled machine into the repair shop, causes making less efficient work and damage of parts, and interferes with rust prevention and dust protection while reassembling.

(3) Inspecting machines
Confirm the disassembling section before starting work, determine the disassembly procedure taking the conditions in repair shop into account, and request to procure necessary parts in advance.

(4) Recording
Record the following items to keep contact and prevent malfunction from recurring.

1) Inspecting date, place
2) Model name, Applicable machine No., Records on hour meter
3) Trouble condition, place, cause
4) Visible oil leakage, water leakage and damage
5) Clogging of filters, etc., oil level, oil quality, oil contamination and looseness which can be inspected.
6) Examine the problems on the basis of operation rate with the last inspection date and records on hour meter.

(5) Arrangement and cleaning in repair shop

1) Tools required for repair work.
2) Specify places to put the disassembled parts on in advance.
3) Prepare oil pans for leaking oil, etc.



1.2 SAFETY WHEN DISASSEMBLING AND ASSEMBLING

(1) Safety

1) Wear appropriate clothing, safety shoes, safety helmet, goggles, and clothes with long sleeves.
2) Suspend warning tag "Don't operate" from lever, and begin preliminaries before getting down to work.
3) Before starting inspection and maintenance which contain the danger of being caught in machine, stop the engine.
4) Confirm the position of first-aid box and fire extinguisher, and also where to make contact for emergency measure and ambulance to prepare for accidents and fire.
5) Choose a hard, flat and safe place, and put attachment on the ground without fail.
6) Use crane, etc. to remove parts of heavy weight (20kg [44 lbs] or more).
7) Use proper tools, and change or repair defective tools.
8) Machine and attachment required to work in the lifting condition should be supported with supports or blocks securely.

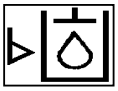

1.3 DISASSEMBLING AND ASSEMBLING HYDRAULIC EQUIPMENT

(1) Removing hydraulic equipment assy

1) Before removing pipes, release the pressure of hydraulic oil tank, or open the cover on the return side to tank, and take out the filter.
2) Put the oil in the removed pipes in reservoir taking care it is not spilled on the ground.
3) Pipes with plugs or caps to prevent oil leaking, entry of dust, etc.
4) Clean the outside surface of equipment, etc. before disassembling, and drain hydraulic oil and gear oil before putting them on working bench.

(2) Disassembling hydraulic equipment

1) Since performance and function of hydraulic equipment after disassembly and assembly results in immunity from responsibility on the manufacture's side, disassembly, assembly and conversion without permission are strictly prohibited.
2) If it is unavoidably necessary to disassemble and convert, it should be carried out by experts or personnel authorized through service training.
3) Make match mark on parts for reassembling.
4) Before disassembling, read Disassembling Instruction supplied with equipment in advance, and determine if the disassembly and assembly are permitted or not.
5) For parts which are required to use jig and tools, don't fail to use the specified jig and tools.
6) For parts which can not be removed in the specified produre, never force removal. First check for the cause.

PREVIEW - YOUFIXTHIS.COM

Download full manual at youfixthis.com

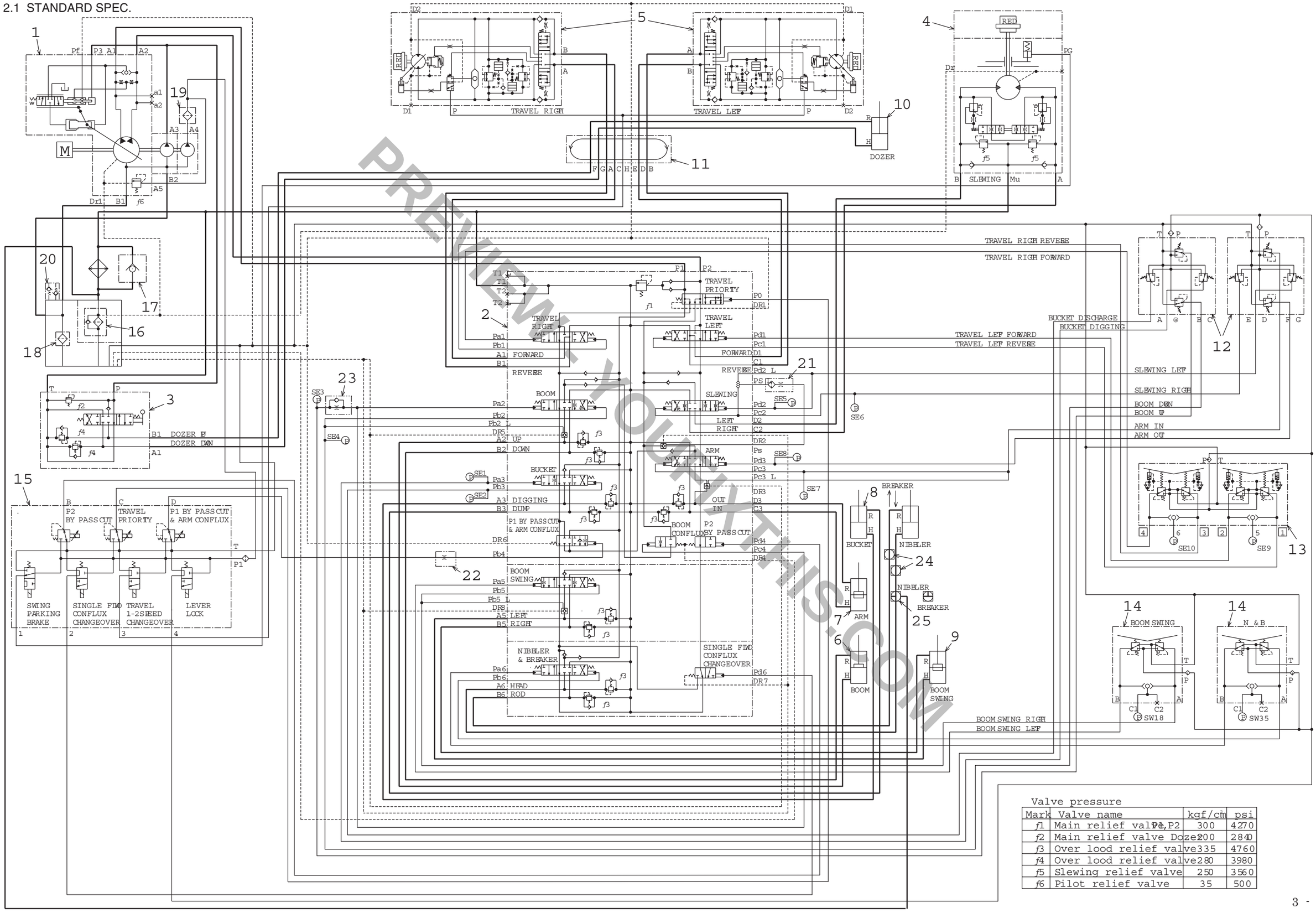

Valve pressure

Mark	Valve name	kgf/cm²	psi
f1	Main relief valve P1, P2	300	4270
f2	Main relief valve Dozer	200	2840
f3	Over lood relief valve	335	4760
f4	Over lood relief valve	280	3980
f5	Slewing relief valve	250	3560
f6	Pilot relief valve	35	500

PREVIEW - YOUFIXTHIS.COM
Download full manual at youfixthis.com

1. SUMMARY OF MECHATRO CONTROL SYSTEM

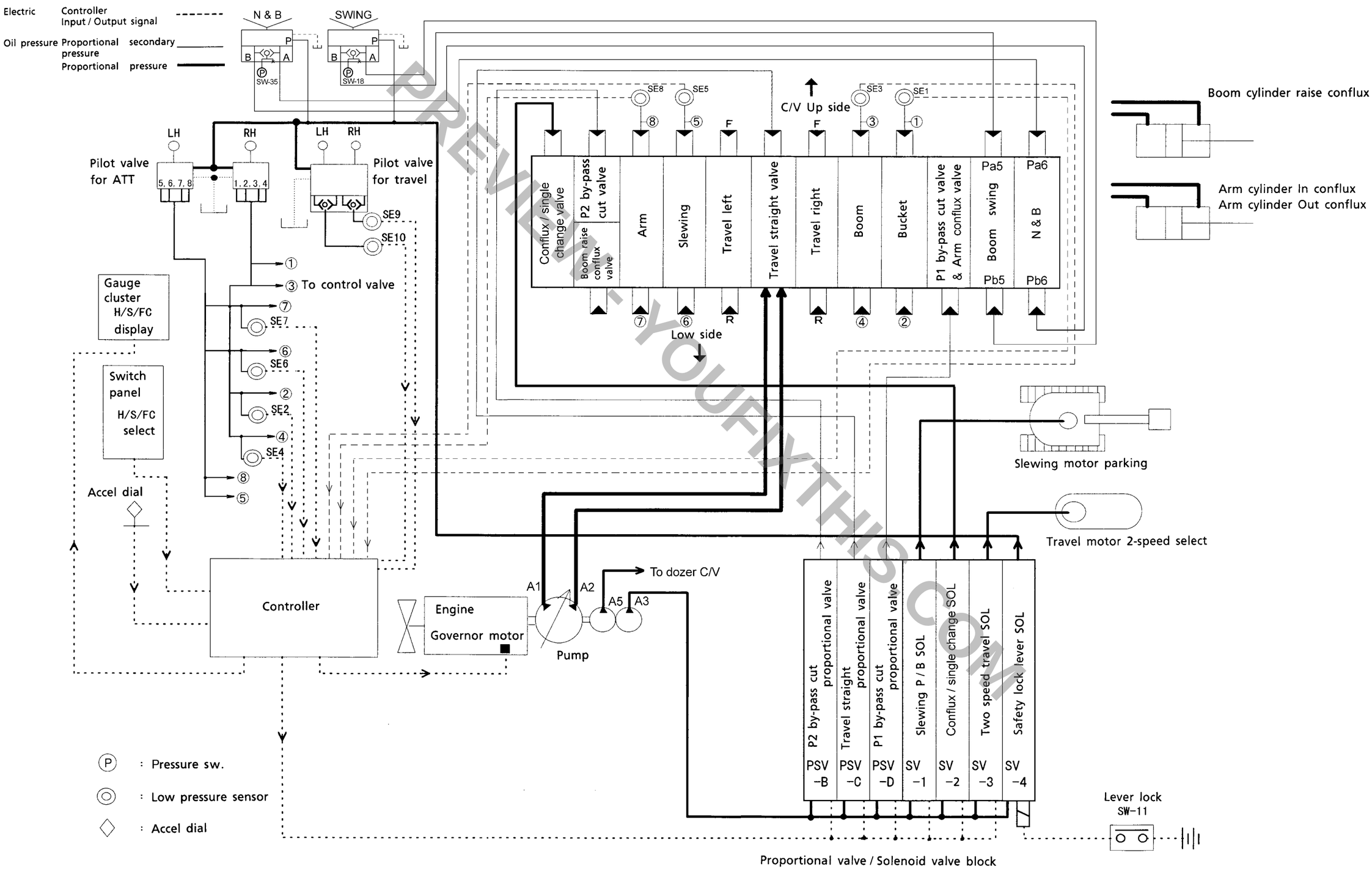

PREVIEW - YOUFIXTHIS.COM

Download full manual at youfixthis.com

1. STANDARD MAINTENANCE TIME SCHEDULE FOR EXCAVATOR

(1) Standard maintenance time schedule

1) Units of working time : 6 minutes=0.1 hour

2) Calculating method of standard maintenance time :

Maintenance time=Working time× the number of workers

(Working time=Maintenance time÷ the number of workers)

3) When more than one operation is going on :

Add each standard service time.

A pure time (readily started) is given except covers easily removed by hand. Assy works include the following works marked with black dot • .

4) O/H : Basically the installing and removing operations are included.

5) Abbreviations in the table.

A/C ; Air conditioner
ASSY ; Assy
ATT ; Attachment
BRG ; Bearing
C/V ; Control valve
Cyl ; Cylinder
E/G ; Engine
F hose ; Flexible hose
O/H ; Over haul
SOL ; Solenoid
SW ; Switch
V ; Valve

(2) Classification of working code

No.	Group	Remarks
01 02 03 04	Attachment Cab & Guard Upper frame Travel system	Indicates installing, removing, replacement and overhaul.
06	Electric equipments	Indicates the installing, removing and replacement of single items.
09	E/G relation	Indicates overhaul of the single engine. (Materials prepared by manufacturer)

(3) Conditions for standard service time of the engine

1) Tools designated by E/G maker are used

2) Genuine parts are changed

3) Correct working procedures are observed.

• The time required for works specified in this Chapter shows the total time for maintenance.

Unit : Hour

Group		Location	Work to be done	Unit	Remarks	E80
	00	Bucket relation			2. Reference for bucket	
01 Attachment	01	Bucket assy	Detach/attach	1 pc.	Include adjustment.	0.5
	02	• Bucket attaching and detaching position	Preparation	1 pc.		0.1
	03	• Bucket attaching pin	Detach/attach	1	Include locking of pin.	0.1
	04	• Bucket drive pin	Detach/attach	1		0.1
	05	• Bucket sling and movement	Preparation	1 pc.		0.1
	06	Bucket (single)	O/H	1 pc.	Not include attaching and detaching.	2.0
	07	• Tooth	Replace	1 pc.		0.5
	08	• Side cutter	Replace	1 pc.		1.0
	09	• Bushing	Replace	1 pc.		0.5
	10	Arm relation			3. Reference for arm	
	11	Arm assy	Detach/attach	1 pc.		1.0
	12	• Bucket cylinder attaching and detaching position and piping	Preparation	1 pc.		0.3
	13	• Bucket cylinder rod pin	Detach/attach	1 pc.	Include locking of pin.	0.1
	14	• Bucket cylinder head pin	Detach/attach	1 pc.	Include locking of pin.	0.1
	15	• Bucket cylinder assy	Detach/attach	1 pc.		0.1
	16	• Arm cylinder rod pin	Detach/attach	1 pc.	Include locking of pin.	0.1
	17	• Boom top pin	Detach/attach	1 pc.		0.1
	18	• Arm sling and movement	Detach/attach	1 pc.		0.1
	30	Boom relation			4. Reference for boom	
	31	Boom assy	Detach/attach	1 pc.		1.0
	32	• Boom attaching and detaching position	Preparation	1 pc.		0.1
	33	• Boom cylinder temporary slinging	Preparation	1 pc.		0.1
	34	• Boom cylinder rod pin	Detach/attach	1	Include locking of pin.	0.1

PREVIEW - YOUFIXTHIS.COM

Download full manual at youfixthis.com

1. NAME OF COMPONENTS

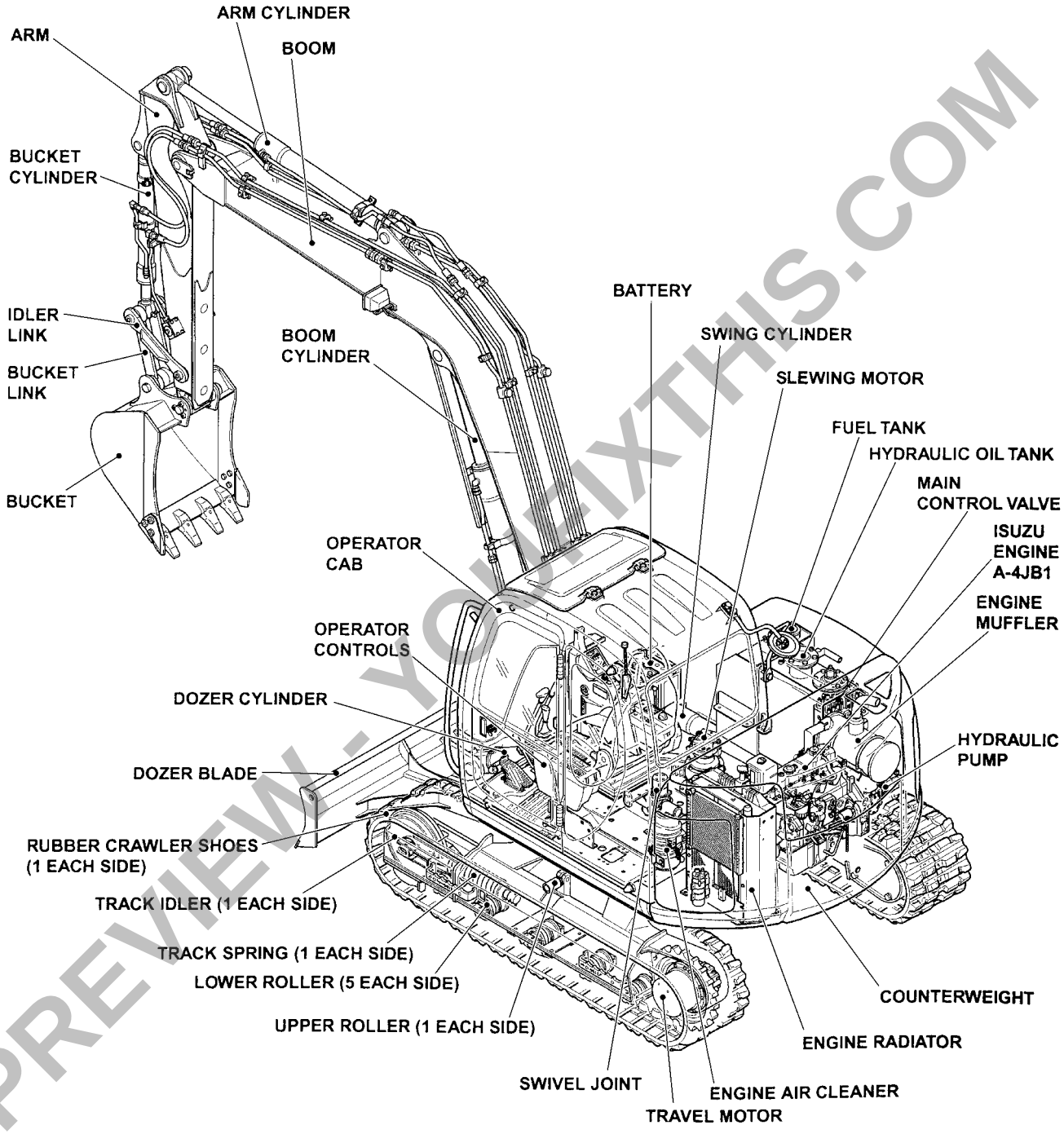

PREVIEW - YOUFIXTHIS.COM

Download full manual at youfixthis.com

1. TIGHTENING TORQUES FOR CAPSCREWS AND NUTS

Tables 1-1 and 1-2 indicate tightening torques applicable to cases where no special note is given. Overtightening of bolts may result in a twist-off and a fracture under load. Insufficient tightening may lead to a loosening or loss of bolts. Always tighten bolts to proper torques.

Table 1-1 Standard tightening torques for metric coarse screw threads unit : kgf·m (lbf·ft)

Classification	4.8T		7T		10.9T	
Nominal size	No lubrication	Oil lubrication	No lubrication	Oil lubrication	No lubrication	Oil lubrication
M 6 P=1	0.45±0.05 (3.3±0.4)	0.38±0.04 (2.7±0.3)	0.98±0.1 (7.1±0.7)	0.83±0.08 (6.0±0.6)	1.77±0.18 (13±1)	1.5±0.15 (11±1)
M 8 P=1.25	1.09±0.11 (7.9±0.8)	0.92±0.09 (6.7±0.7)	2.4±0.2 (17±1)	2.0±0.2 (14±1)	4.3±0.4 (32±3)	3.6±0.4 (26±3)
M10 P=1.5	2.2±0.2 (16±1)	1.83±0.18 (13±1)	4.7±0.5 (34±4)	4.0±0.4 (29±3)	8.5±0.9 (61±7)	7.2±0.7 (52±5)
M12 P=1.75	3.7±0.4 (27±3)	3.2±0.3 (23±2)	8.1±0.8 (59±6)	6.8±0.7 (49±5)	14.6±1.5 (110±11)	12.3±1.2 (89±9)
M14 P=2	5.9±0.6 (43±4)	5.0±0.5 (36±4)	12.8±1.3 (93±9)	10.8±1.1 (78±8)	23±2 (170±14)	19.5±1.9 (140±14)
M16 P=2	9.0±0.9 (65±7)	7.6±0.7 (55±5)	19.5±2.0 (140±14)	16.4±1.6 (120±12)	35±4 (250±29)	29±3 (210±22)
M18 P=2.5	12.4±1.2 (90±9)	10.5±1.0 (76±7)	27±3 (200±22)	23±2 (170±14)	49±5 (350±36)	41±4 (300±29)
M20 P=2.5	17.5±1.7 (130±12)	14.7±1.4 (110±10)	38±4 (270±29)	32±3 (230±22)	68±7 (490±51)	57±6 (410±43)
M22 P=2.5	23±2 (170±14)	19.6±2.0 (140±14)	51±5 (370±36)	43±4 (310±29)	92±9 (670±65)	77±8 (560±58)
M24 P=3	30±3 (220±22)	24±3 (170±22)	65±7 (470±51)	53±5 (380±36)	118±12 (850±87)	96±10 (690±72)
M27 P=3	44±4 (320±29)	36±4 (260±29)	96±10 (690±72)	78±8 (560±58)	173±17 (1300±120)	140±14 (1000±100)
M30 P=3.5	60±6 (430±43)	50±5 (360±36)	131±13 (950±94)	110±11 (800±80)	235±24 (1700±170)	198±20 (1400±140)
M33 P=3.5	81±8 (590±58)	68±7 (490±51)	176±18 (1300±130)	148±15 (1100±110)	317±32 (2300±230)	266±27 (1900±200)
M36 P=4	105±10 (760±72)	88±9 (640±65)	227±23 (1600±170)	190±19 (1400±140)	409±41 (3000±300)	343±34 (2500±250)

Table 1-2 Standard tightening torques for metric fine screw threads unit : kgf·m (lbf·ft)

Classification	4.8T		7T		10.9T	
Nominal size	No lubrication	Oil lubrication	No lubrication	Oil lubrication	No lubrication	Oil lubrication
M 8 P=1	1.15±0.11 (8.3±0.8)	0.97±0.1 (7.0±0.7)	2.5±0.2 (18±1)	2.1±0.2 (15±1)	4.5±0.4 (33±3)	3.8±0.4 (27±3)
M10 P=1.25	2.3±0.2 (17±1)	1.91±0.19 (14±1)	4.9±0.5 (35±4)	4.2±0.4 (30±3)	8.9±0.9 (64±7)	7.5±0.7 (54±5)
M12 P=1.25	4.0±0.4 (29±3)	3.4±0.3 (25±2)	8.7±0.9 (63±7)	7.3±0.7 (53±5)	15.7±1.6 (110±12)	13.2±1.3 (95±9)
M16 P=1.5	9.4±0.9 (68±7)	7.9±0.8 (57±6)	20±2 (140±14)	17.2±1.7 (120±12)	37±4 (270±29)	31±3 (220±22)
M20 P=1.5	19±1.9 (140±14)	15.8±1.6 (110±12)	41±4 (300±29)	34±3 (250±22)	74±7 (540±51)	62±6 (450±43)
M24 P=2	32±3 (230±22)	27±3 (200±22)	70±7 (510±51)	58±6 (420±43)	126±12 (910±87)	105±10 (760±72)
M30 P=2	65±6 (470±43)	54±5 (390±36)	142±14 (1000±100)	118±12 (850±87)	255±26 (1800±190)	212±21 (1500±150)
M36 P=3	109±11 (790±80)	91±9 (660±65)	238±23 (1700±170)	198±20 (1400±140)	428±43 (3100±310)	357±36 (2600±260)

PREVIEW - YOUFIXTHIS.COM

Download full manual at youfixthis.com

AVOID ACCIDENTS

Most accidents, whether they occur in industry, on the farm, at home or on the highway, are caused by the failure of some individuals to follow simple and fundamental safety rules or precautions. For this reason MOST ACCIDENTS CAN BE PREVENTED by recognising the real cause and doing something about it before the accident occurs.
Regardless of the care used in the design and construction of any type of equipment there are conditions that cannot be completely safeguarded against without interfering with reasonable accessibility and efficient operation.
Carefully read indications, cautions and safety warning quoted in the "SAFETY RULES" section.
A careful operator is the best insurance against an accident.
The complete observance of one simple rule would prevent many thousand serious injuries each year.
That rule is:
Never attempt to clean, oil or adjust a machine while it is in motion.

ATTENTION

On machines having hydraulically, mechanically and/or cable controlled equipment (such as showels, loaders, dozers, scrapers etc.) be certain the equipment is lowered to the ground before servicing, adjusting and/or repairing.
If it is necessary to have the equipment partially or fully raised to gain access to certain items, be sure the equipment is suitably supported by means other than the hydraulic lift cylinders, cable and/or mechanical device used for controlling the equipment.

COPYRIGHT BY FIAT KOBELCO CONSTRUCTION MACHINERY S.p.A.
Product Support - Documentation Centre
Strada di Settimo, 323 - S. Mauro T.SE (TO) ITALY

All rights reserved. Reproduction of text and illustrations in whole or in part, is strictly prohibited.

15303 60413253

PREVIEW - YOUFIXTHIS.COM
Download full manual at youfixthis.com

10. UPPER FRAME LIFTING JIG

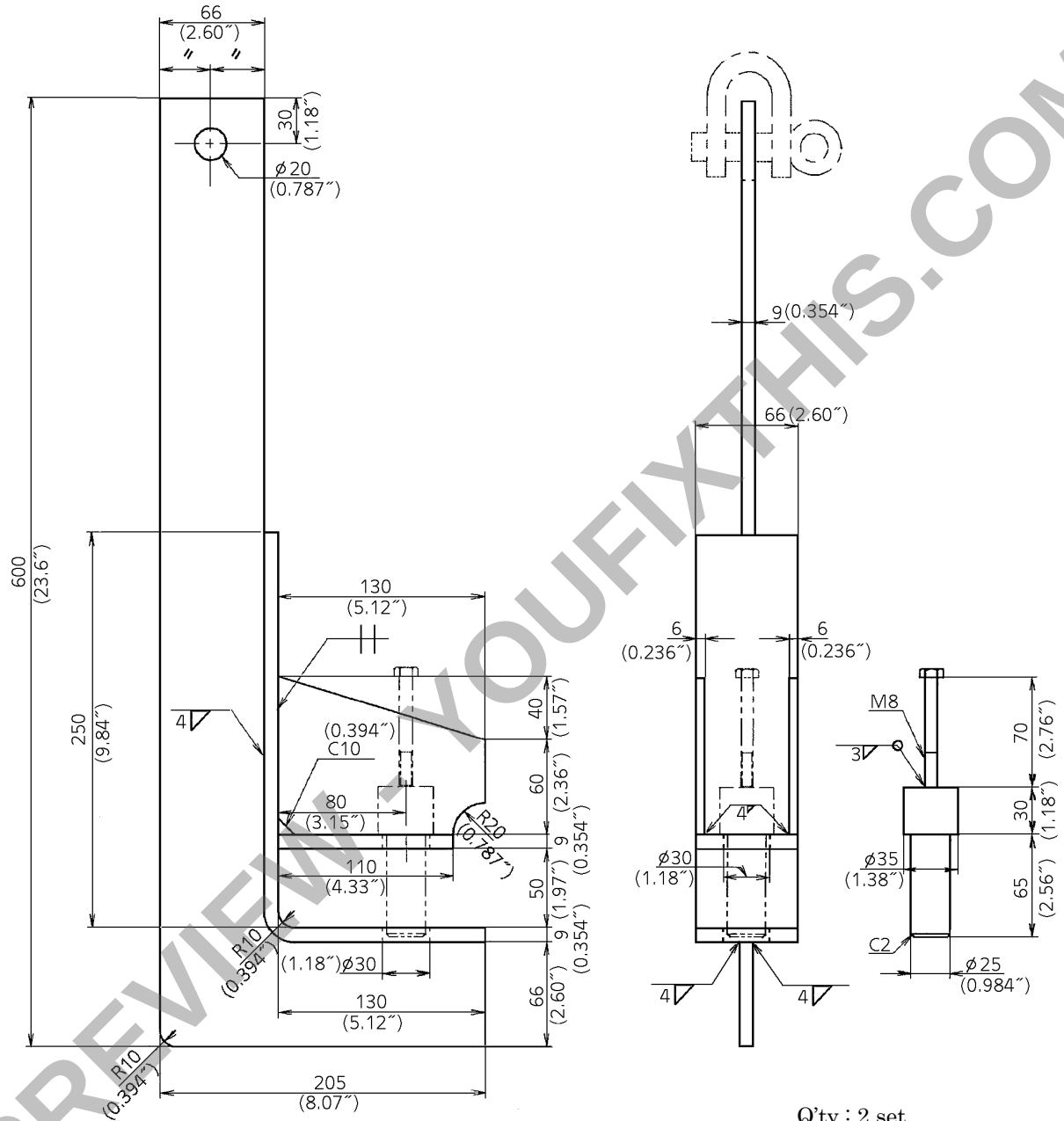

Q'ty : 2 set
Material : Mild steel

Fig. 10-1 Upper frame lifting jig

PREVIEW - YOUFIXTHIS.COM

Download full manual at youfixthis.com

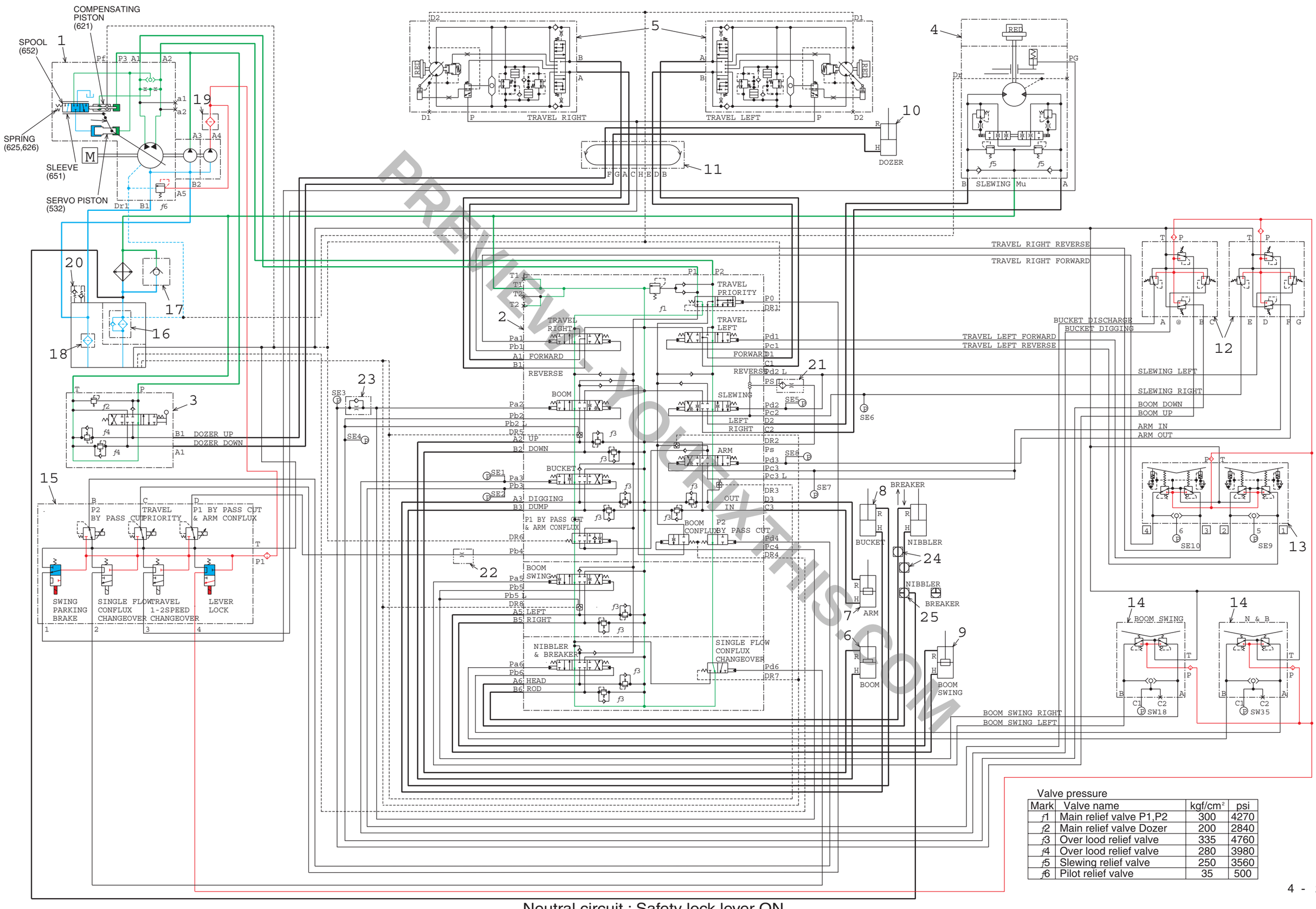

PREVIEW - YOUFIXTHIS.COM

Download full manual at youfixthis.com

Valve pressure

Mark	Valve name	kgf/cm²	psi
f1	Main relief valve P1,P2	300	4270
f2	Main relief valve Dozer	200	2840
f3	Over lood relief valve	335	4760
f4	Over lood relief valve	280	3980
f5	Slewing relief valve	250	3560
f6	Pilot relief valve	35	500

Neutral circuit : Safety lock lever ON

CONTROLLER ASSY		
ITEM	PART NAME	Q'TY
7	SWITCH ASSY	1
8	RELAY	4
22	TIMER	1
25	CONTROLLER	1
26	CONTROLLER	—
27	CAB HARNESS ASSY	1
27-3-1	INSTRUMENT PANEL HARNESS	1
27-3-2	FUSE	1
28	RELAY	—
29	CAB HARNESS ASSY	—
29-7-1	INSTRUMENT PANEL HARNESS	—
29-7-2	FUSE	—
31	CAB HARNESS ASSY	—
31-8-1	INSTRUMENT PANEL HARNESS	—
31-8-2	FUSE	—
32	CONTROLLER	—

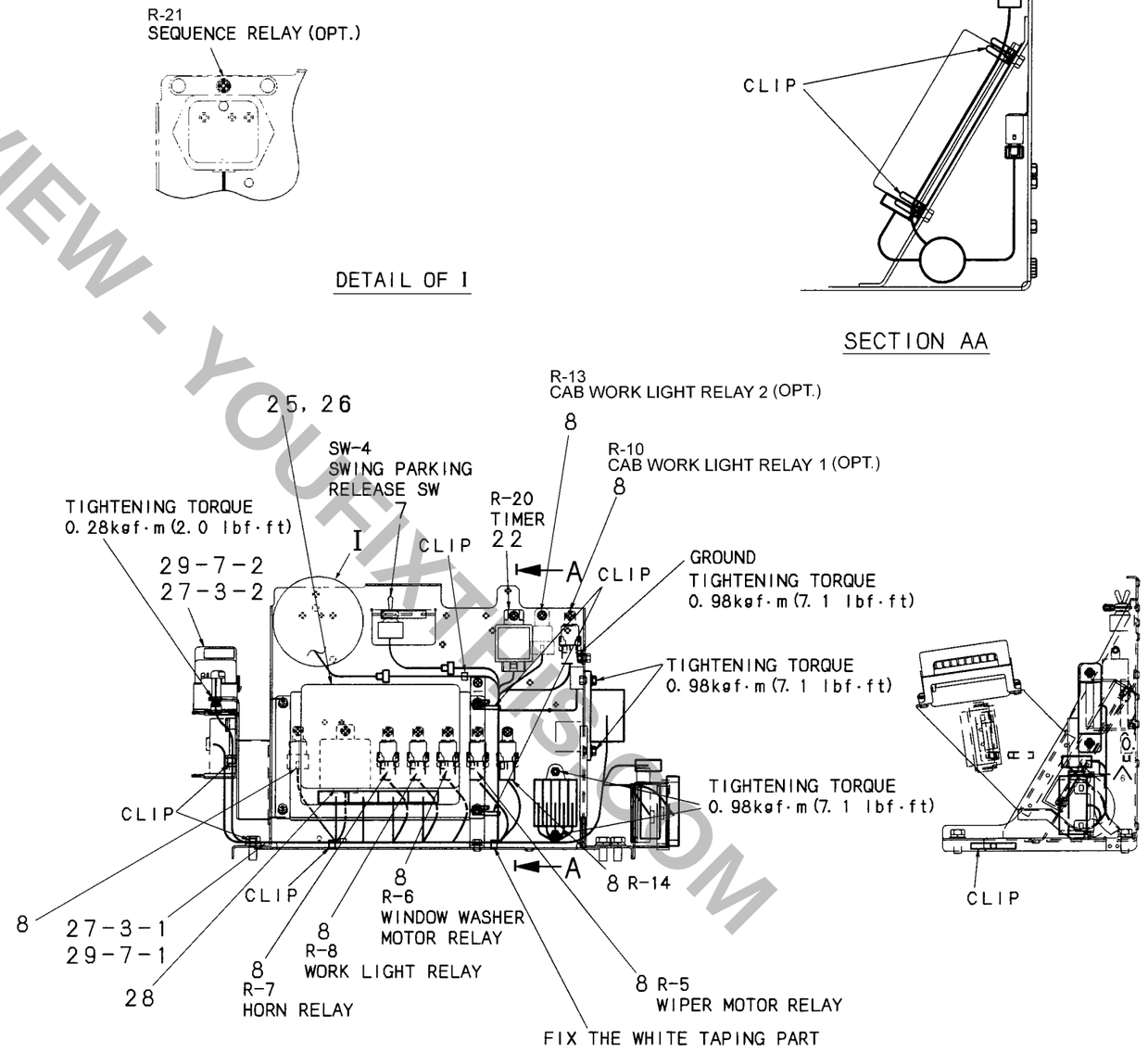

Fig. 3(2/2) Controller assy

PREVIEW - YOUFIXTHIS.COM
Download full manual at youfixthis.com

(6) Functions of lock valves
(boom, arm and boom swing)

1) When the boom spool (10) is in neutral position, the pilot piston chamber C is connected with the drain path via the pilot port Pb2 (for releasing the lock valve). The piston C (36) is therefore held by the spring.

2) The oil which has returned from the boom cylinder passes through the lock valve (28) and fills up the lock valve chamber. Therefore, the needle valve[poppet valve (29)] is positively seated against the poppet seat, while the lock valve is also firmly seated against the body seat.

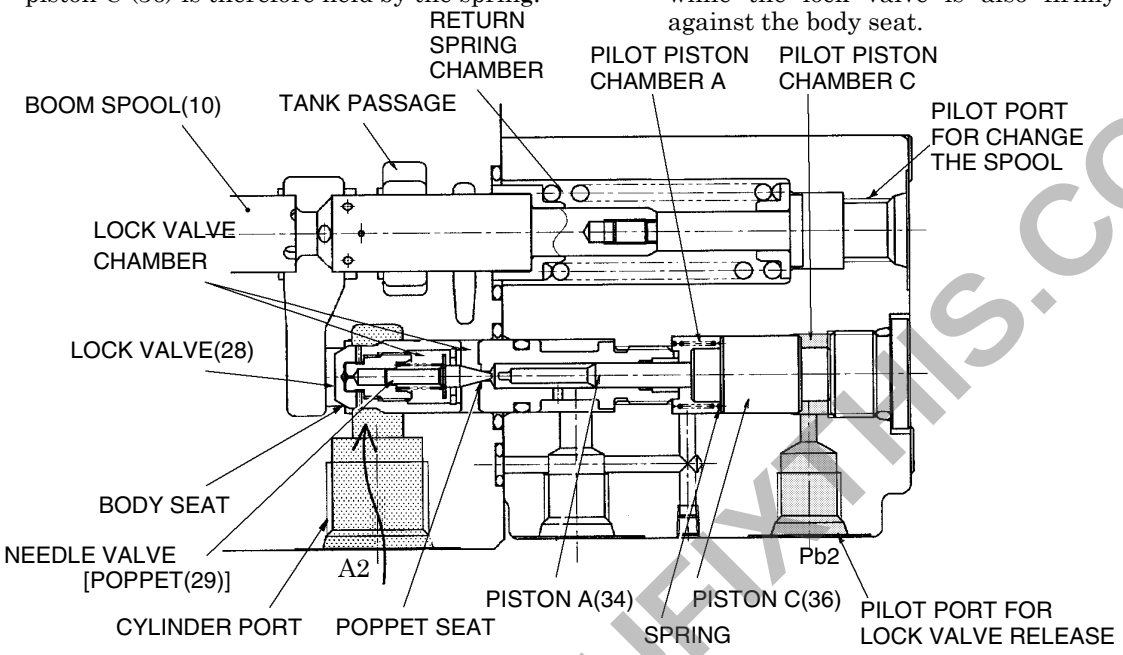

Fig. 2-14 The hold condition of lock valve

3) The moment the boom spool (10) is shifted to the spring chamber side, the Pb2 port of the lock valve releasing pilot line is pressurized. The piston A (34) is pressed by the piston C (36) and opens the needle valve [poppet (29)]. On the occasion, the oil passes through the lock valve→lock valve chamber→pilot piston chamber B→drilled hole A, in that order, and flows to the drain port DR5.

4) If the needle valve [poppet (29)] opens, the pressure of the lock valve chamber falls. The result is that the oil returning from the cylinder opens the lock valve (28) and then runs directly into the tank path via the boom spool (10).

5) If the boom spool (10) is brought back to neutral, the lock valve returns to a held state whereby the lock valve is positively seated against the body seat.

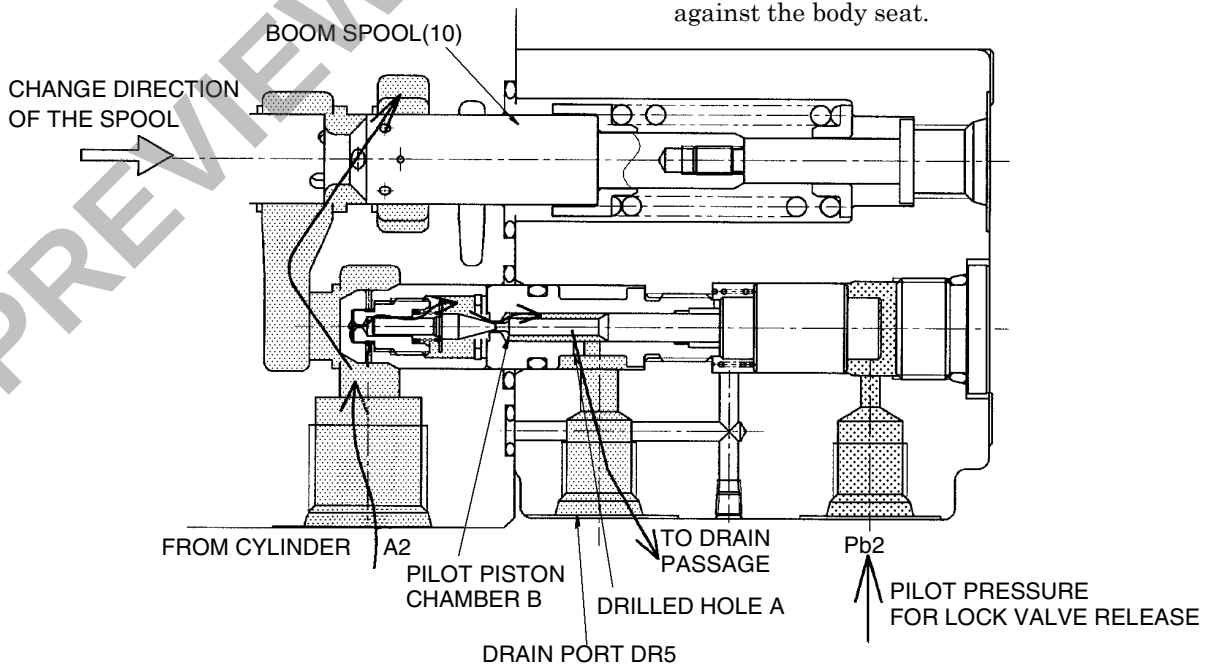

Fig. 2-15 Lock valve in open condition

PREVIEW - YOUFIXTHIS.COM
Download full manual at youfixthis.com

2. ELECTRIC EQUIPMENT

2.1 LIST OF ELECTRIC EQUIPMENTS

Group	Code	NAME	Group	Code	NAME	Group	Code	NAME
CONTROLLER			MOTOR	M−7		PROPORTIONAL SOLENOID VALVE	PSV−B	P2 bypass cut proportional valve
	C−1	Mechatro controller		M−8	Roof wiper motor (OPT.)		PSV−C	Travel straight proportional valve
				M−9	Fuel pump (Auto air bleed)		PSV−D	P1 bypass cut proportional valve
	C−2	Cluster gauge		M−10				
				M−11	Fuel tank pump			
	C−4	Air conditioner controller						
DIODE	D−1	Diode						
	D−2	Diode						
	D−3	Diode	RELAY	R−1	Battery relay	SWITCH	SW−1	Key switch
	D−4	Diode		R−2			SW−2	Switch assy
	D−5	Diode		R−3	Glow relay		SW−3	2-speed travel switch
	D−6	Diode		R−4	Safety relay		SW−4	Slewing parking brake release switch
				R−5	Wiper motor relay		SW−5	
ELECTRIC FITTINGS	E−1	Fuse box		R−6	Washer motor relay		SW−6	E/G water temperature switch [105℃ (221°F)]
				R−7	Horn relay		SW−7	E/G oil pressure switch
	E−2	Alternator (24V-30A)		R−8	Work light relay		SW−8	Air filter clogging switch
	E−3	Hour meter					SW−9	
	E−4			R−10	Cab work light relay 1 (OPT.)			
	E−5	Horn					SW−10	Grip & switch (Horn)
	E−6	Cigarette lighter		R−13	Cab work light relay 2 (OPT.)		SW−11	Lever lock switch
	E−7	Tuner AM / FM (OPT.)					SW−12	
							SW−13	Air conditioner switch
				R−20	Timer		SW−14	
	E−8	Speaker LH		R−21	Sequence relay (OPT.)		SW−15	Roof wiper switch (OPT.)
	E−9	Speaker RH					SW−16	Work light switch
	E−10	Receiver drier					SW−17	Conflux / Single flow select switch
	E−11	A/C compressor					SW−18	Pedal pressure switch ①
	E−12						SW−20	Grip & switch
			SENSOR	SE−1	Pressure sensor (low) : Bucket digging			
	E−14	DC-DC converter		SE−2	Pressure sensor (low) : Bucket dump		SW−22	
	E−15	Power socket		SE−3	Pressure sensor (low) : Boom up		SW−23	Wiper inter lock switch
	E−25	Battery (95D31R)		SE−4	Pressure sensor (low) : Boom down		SW−24	Over load switch (OPT.)
				SE−5	Pressure sensor (low) : Slewing left		SW−25	Hydraulic oil temp. switch (OPT.)
	E−A	Antenna		SE−6	Pressure sensor (low) : Slewing right		SW−26	Auto accel release switch
				SE−7	Pressure sensor (low) : Arm in		SW−27	E/G room light switch
				SE−8	Pressure sensor (low) : Arm out		SW−28	Overload indicate switch
LIGHT	L−1	Boom work light left (& right)		SE−9	Pressure sensor (low) : Travel right		SW−29	Rotary light switch
	L−2	Work light right		SE−10	Pressure sensor (low) : Travel left			
	L−3	Room light (Dome light)		SE−11				
	L−4	Cab work light front (1) OPT.		SE−12				
	L−5	Cab work light front (2) OPT.		SE−13	E/G speed sensor			
	L−6	Cab work light front (3) OPT.		SE−14	E/G water temperature sensor		SW−34	Swing / Extra select switch (OPT.)
	L−7	Engine room light		SE−15	Fuel sensor		SW−35	Pedal pressure switch ②
	L−8	Cab working light front (4)(OPT.)		SE−16	Accel potentiometer		SW−37	Buzzer stop switch (OPT.)
	L−9	Cab working light rear (OPT.)					SW−A	Cab door switch
	L−10	Rotary light (OPT.)	SOLENOID	SV−1	Slewing parking			
				SV−2	Double, single select			
				SV−3	2-speed travel			
	L−13	Hyd. oil temp. alarm lamp (OPT.)		SV−4	Lever lock			
	L−14	Swing / Extra select indication lamp (OPT.)						
				SV−6	Swing / Extra select (OPT.)			
MOTOR	M−1	Starter motor (24V×3.2kW)						
	M−2	Governor motor						
	M−3	Wiper motor						
	M−4	Washer motor						
	M−5							
	M−6							

PREVIEW, YOUFIXTHIS.COM
Download full manual at youfixthis.com

【Blower motor does not run.】

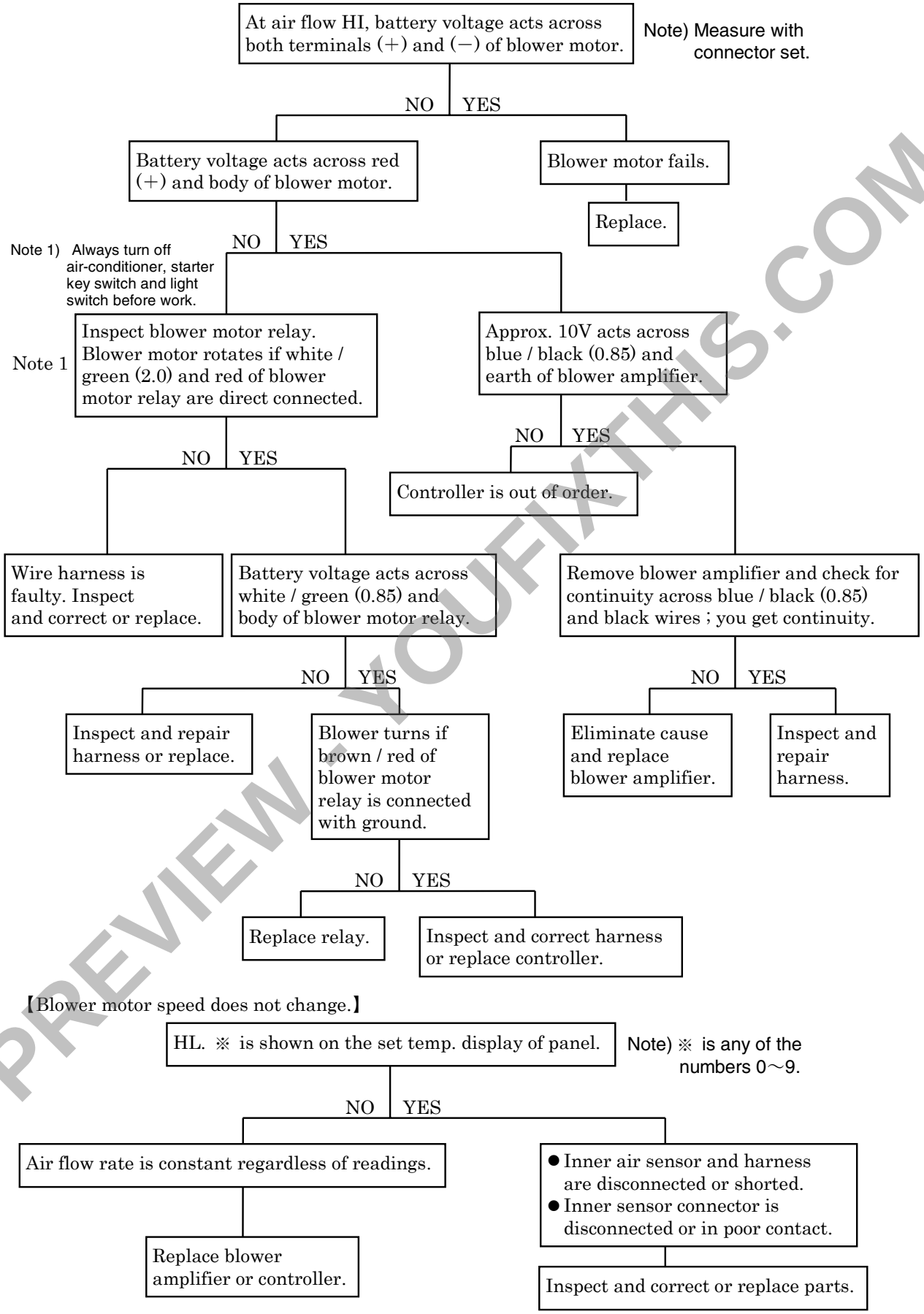

【Blower motor speed does not change.】

PREVIEW - YOUFIXTHIS.COM

Download full manual at youfixthis.com

6. GUARD

6.1 PREPARATION FOR REMOVAL

(1) Remove guard in the following procedure.
For removing equipment
Items (1) to (8).
For dismounting engine.
Items (9) to (13).

(2) All the locked equipment, open them using starter key.

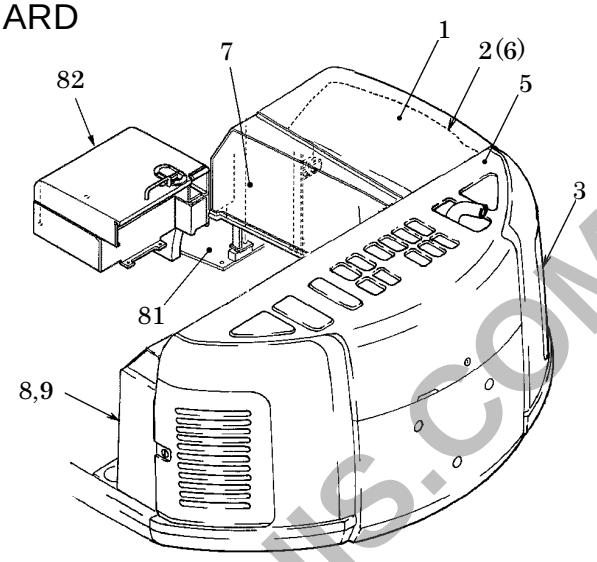

Fig. 6-1 Guard assy (Out side)

6.2 REMOVE GUARD

(1) Remove cover assy (1)
1) Open cover assy (1) and lift it up.
2) Remove two nuts (26)M12.
3) Remove cover assy (1).
: 19mm
Weight : 12.5kg (27.5 lb)

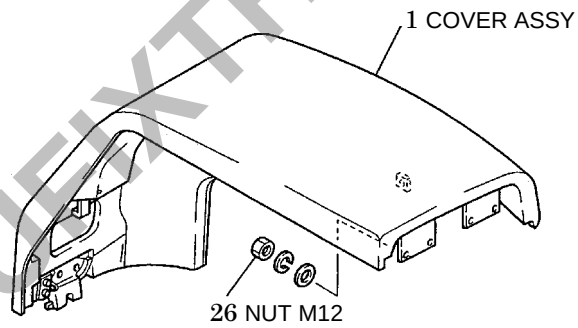

Fig. 6-2 Removing cover assy (1)

(2) Remove panel assy (2)
1) Remove two sems bolts (24)M12×25.
2) Remove two nuts (26).
3) Remove panel assy (2).
: 19mm
Weight : 12.5kg (27.5 lb)

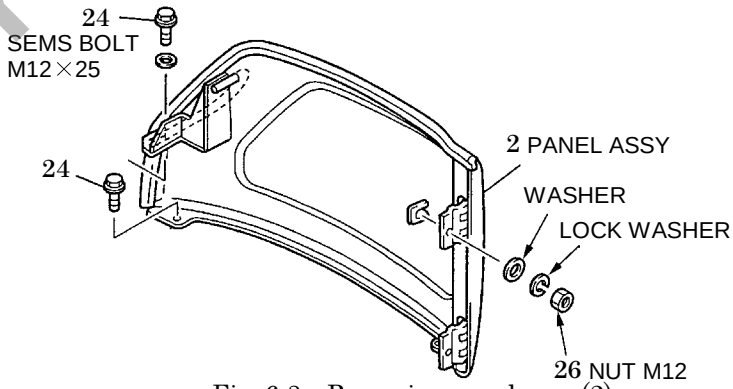

Fig. 6-3 Removing panel assy (2)

(3) Remove cover assy (6)
1) Remove two capscrews (38)M12×45.
2) Remove one sems bolt (25)M12×30.
3) Remove three sems bolts (24)M12×25.
4) Remove cover assy (6).
: 19mm
Weight : 7kg (15 lb)

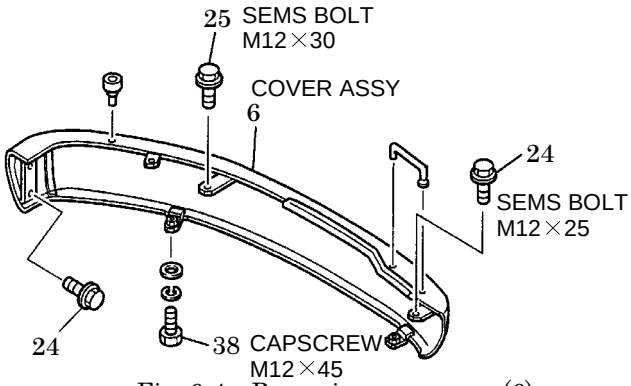

Fig. 6-4 Removing cover assy (6)

PREVIEW - YOUFIXTHIS.COM
Download full manual at youfixthis.com

3.2 DISASSEMBLY & ASSEMBLY

(1) Tools

No.	Tool Name	Remarks
a	Torque wrench	1.5~10 kgf·m class (10~75 lbf·ft)
b	Screw driver (○ , -)	W= 2~3mm, 4~5mm (0.08~0.12in, 0.16~0.20in)
c	Screw driver (○ , +)	
d	General tools	Spanner and Allen wrench

(2) Caution for disassembly & assembly

1) Exercise sufficient care to prevent entry of dust when disassembling and assembling components.
2) Handle the parts with sufficient care, preventing defect.
3) The spools, spring seats and springs used in ports 1, 3 and ports 2, 4 of this pilot valve differ slightly in dimensions. Before removing those parts, record the locations so they are installed in correct positions.

(3) Disassembly

1) Remove the handle lever assy, boots and lead wires from valve body (101). (See Fig. 3-2)
2) Fix the pilot valve with a vise, placing copper plates (or lead plates).
3) Place a wrench in the opposing flats of the disk (302) and turn counterclockwise till joint (301) gets loosened.
   : 22mm
4) Remove the operating part of the handle (301, 302, 312) from the valve body (101).
5) Remove plate (151)
6) Remove plug (211) with push rod (212) from valve body (101) so as not to exert uneven load upon it, utilizing the groove in the outer circumference of plug (211) and using a screw driver (b).

   Take care that the plug (211) may jump out by spring force of the springs (221-1, 221-2, 241-1, 241-2) while the plug is pulling out.
7) Remove push rods (212-1, 212-2) and spring seats (216-1, 216-2).
8) Record the related location of the holes in the spool assy and valve body (101). Remove the spool assy from valve body (101).
9) Take off springs (221-1, 221-2).

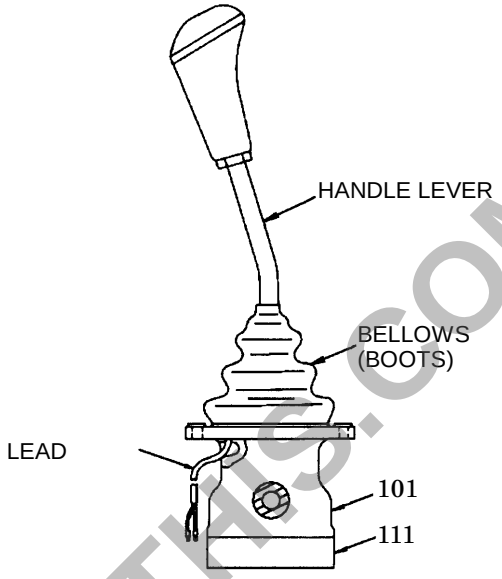

Fig. 3-2 Disassembling handle lever

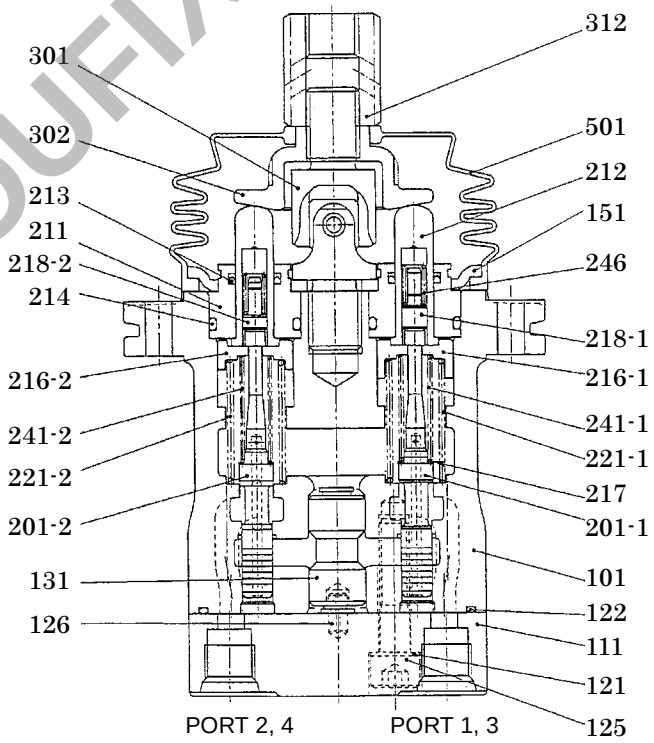

Fig. 3-3 Disassembling pilot valve

10) Loosen socket bolt (125), using an allen wrench and remove port plate (111) from valve body (101).
    : 6mm
11) Remove bushing (131) from casing (101).

PREVIEW - YOUFIXTHIS.COM
Download full manual at youfixthis.com

6) Fixing idler adjuster assy
Fit retainer plate to bracket (2), tighten holding-down nuts alternately, and secure idler adjuster assy.
: 46mm

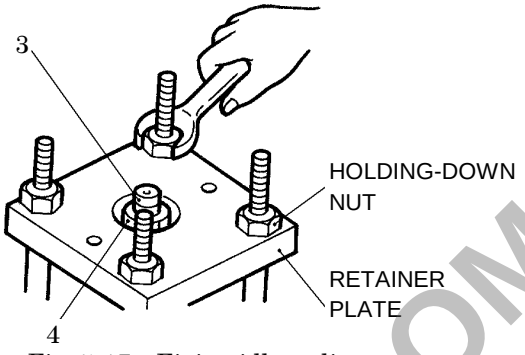

Fig. 5-17 Fixing idler adjuster assy

7) Compression of spring (5)
Remove spring pin (4), press spring (5) lifting it with jack so that nut (3) can be turned freely, and remove nut (3).
: 46mm

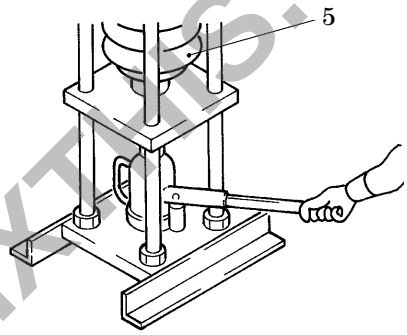

Fig. 5-18 Compression of spring (5)

8) Removing bracket (2)
Allow the hydraulic jack to lower (shorten) slowly till the spring is extended to its free length. Remove the retainer plate and take off bracket (2).
The free length of the spring : about 320mm (12.6in)
: 46mm

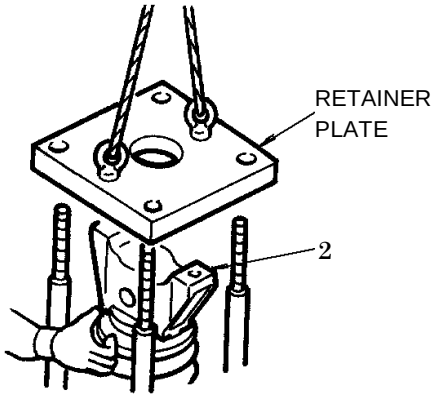

Fig. 5-19 Removing retainer plate, bracket (2)

9) Removing spring (5), grease cylinder (1)
Hook lifting eye nut (W) to screw M36×P3 on grease cylinder (1) top end and hoist it. Then, remove the set of grease cylinder (1) and spring (5) using crane from the jig.
Remove spring (5), grease cylinder (1), in that order.

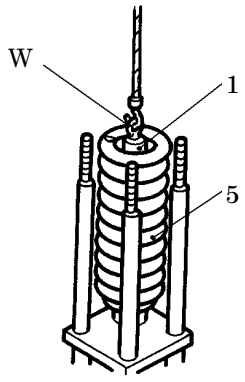

Fig. 5-20 Removing spring (5), grease cylinder (1)

PREVIEW - YOUFIXTHIS.COM
Download full manual at youfixthis.com

③ Install hub (1) to cover (8).

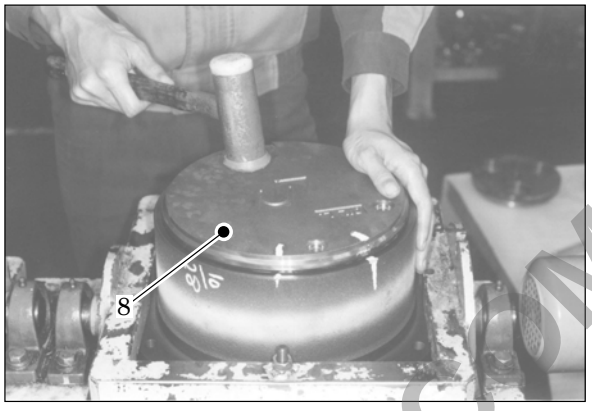

⚠
- Align the matching marks on cover (8) and hub (1) and install them.
- Install cover (8) in hub (1), tapping the outer circumference of cover (8) lightly by means of a plastic mallet. Use care that if the cover is fixed jerkily by striking it hard, the O ring is scored and brings about an oil leakage.

④ Fix ring (18) into the ring groove of hub (1).

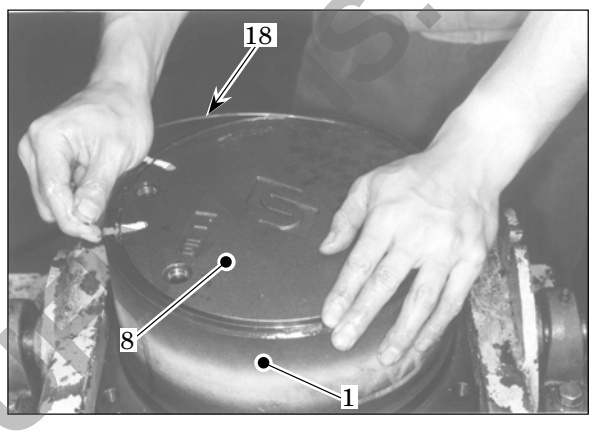

⑤ Fit the O ring (35) to flange plug (33). Tighten with flange plug (33) into the cover (8).

Tightening torque : 6kgf·m (43 lbf·ft)

⑥ Fit the O ring (35) to flange plug (34). Tighten with flange plug (34) into the cover (8).

Tightening torque : 6kgf·m (43 lbf·ft)

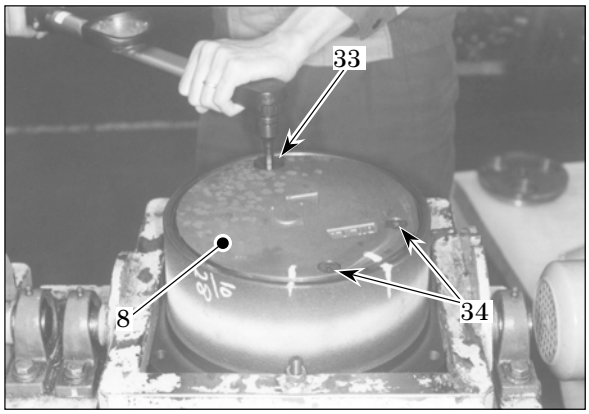

19) Removing travel motor

① Remove the travel motor attaching bolts from the work bench.

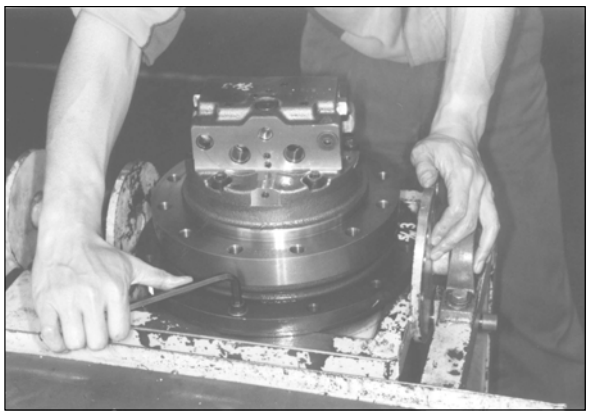

PREVIEW - YOUFIXTHIS.COM
Download full manual at youfixthis.com

PREVIEW - YOUFIXTHIS.COM

Download full manual at youfixthis.com

SECTION 4: ENGINE ASSEMBLY (2)

TABLE OF CONTENTS

Inspection and repair 48

PREVIEW - YOUFIXTHIS.COM

31102 60413252

Download full manual at youfixthis.com

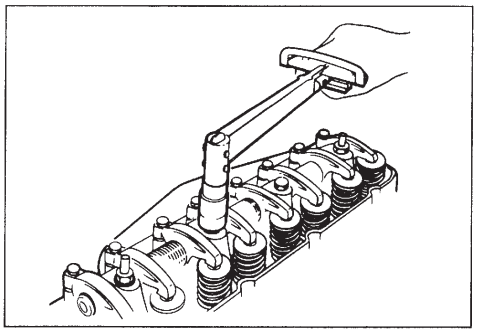

11. Rocker Arm Shaft and Rocker Arm

Tighten the rocker arm shaft bracket bolts in the numerical order shown in the illustration.

Rocker Arm Shaft Bracket Bolt Torque	N·m(kgf·m/lb.ft)
49 – 59 (5.0 – 6.0/36 – 43)	

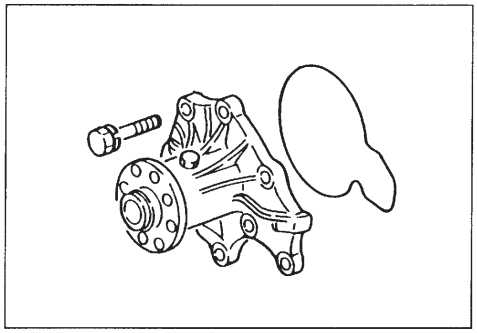

12. Water Pump

1) Temporarily tighten the water pump bolt marked with an arrow in the illustration.
This bolt will be tightened to the specified to torque when the alternator adjusting plate is installed.
2) Tighten the other water pump bolts to the specified torque.

Water Pump Bolt Torque	N·m(kgf·m/lb.ft)
14 – 24 (1.4 – 2.4/10 – 17)	

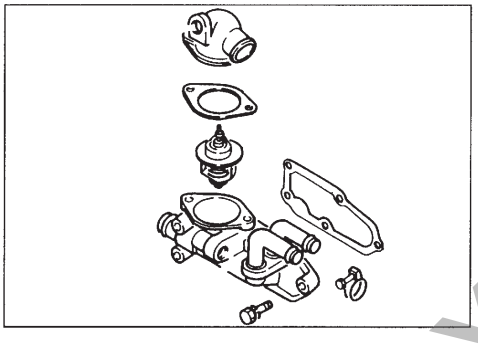

13. Thermostat Housing

1) Install the thermostat housing.
2) Tighten the thermostat housing bolts to the specified torque.

Thermostat Housing Bolt Torque	N·m(kgf·m/lb.ft)
14 – 24 (1.4 – 2.4/10 – 17)	

15. Glow Plug and Glow Plug Connector

1) Tighten the glow plugs to the specified torque.

Glow Plug Torque	N·m(kgf·m/lb.ft)
15 – 20 (1.5 – 2.0/11 – 14)	

2) Install the glow plug connectors.

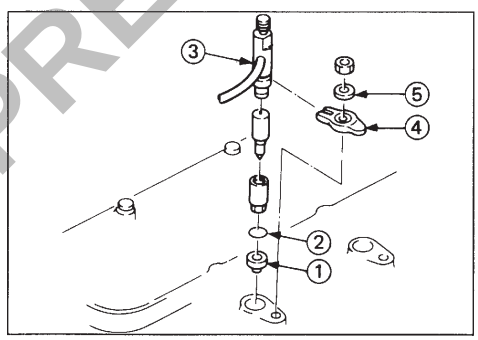

16. Injection Nozzle Holder

1) Install the injection nozzle gasket ① and the O-ring ② to the injection nozzle holder ③ .
2) Install the nozzle holder ③ together with the nozzle holder bracket ④ to the cylinder head.
3) Tighten the holder nuts with washer ⑤ to the specified torque.

Injection Nozzle Holder Nut Torque	N·m(kgf·m/lb.ft)
31 – 43 (3.2 – 4.4/23 – 32)	

15303 60413253

PREVIEW - YOUFIXTHIS.COM

Download full manual at youfixthis.com

DISASSEMBLY

These disassembly steps are based on the built-in IC regulator type.

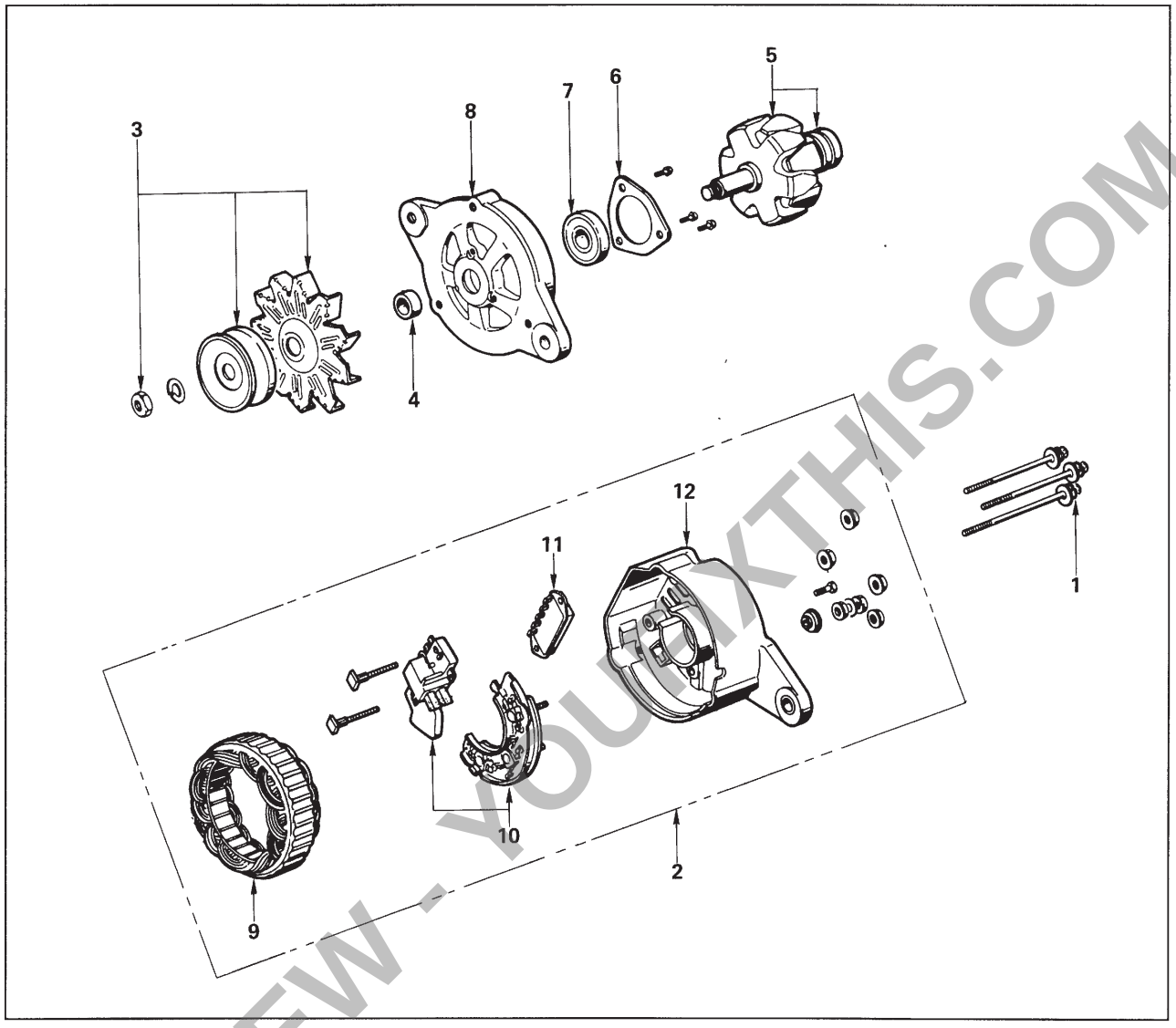

Disassembly Steps

1. Through bolt
2. Rear cover and stator
▲ 3. Pulley and fan
▲ 4. Spacer collar
5. Rotor with bearing
6. Bearing retainer
7. Ball bearing
8. Front cover
▲ 9. Stator
▲ 10. Rectifier with brush holder
11. IC regulator
12. Rear cover

PREVIEW - YOUFIXTHIS.COM

31102 60413252

Download full manual at youfixthis.com

PREVIEW ONLY

You're viewing 25 of 856 pages

The full manual includes:

- All 856 pages, complete
- Searchable PDF (find any keyword)
- No watermarks
- Instant download
- Print-ready quality

GET FULL MANUAL NOW

Fiat Kobelco E80 Evolution Repair Manual

Scan or click anywhere
youfixthis.com

Click anywhere on this page to get the full manual