Oil is picked up from the sump by the intake tube and drawn into the lower side of the oil pump body. Oil from the pump flows through passages in the block, past the

to the No. 2 cylinder rod bearing by way of the crankshaft. The crankshaft and rod bearings are lubricated by means of oil passages through the block to the main

PREVIEW - YOUFIXTHIS.COM

Blurred on purpose. The manual you buy has this page in full quality.

Download full manual at youfixthis.com

6. OIL PUMP AND FILTER

OIL PUMP

A. **Disassembly and Inspection**
Refer to Figure 31.

1. Remove the cover from the oil pump.
2. Pull out the oil pump gears.
3. Inspect the oil pump housing cover, and gears for excessively worn or damaged parts. Replace any parts that are in poor condition.
4. Measure the clearance between the oil pump gear

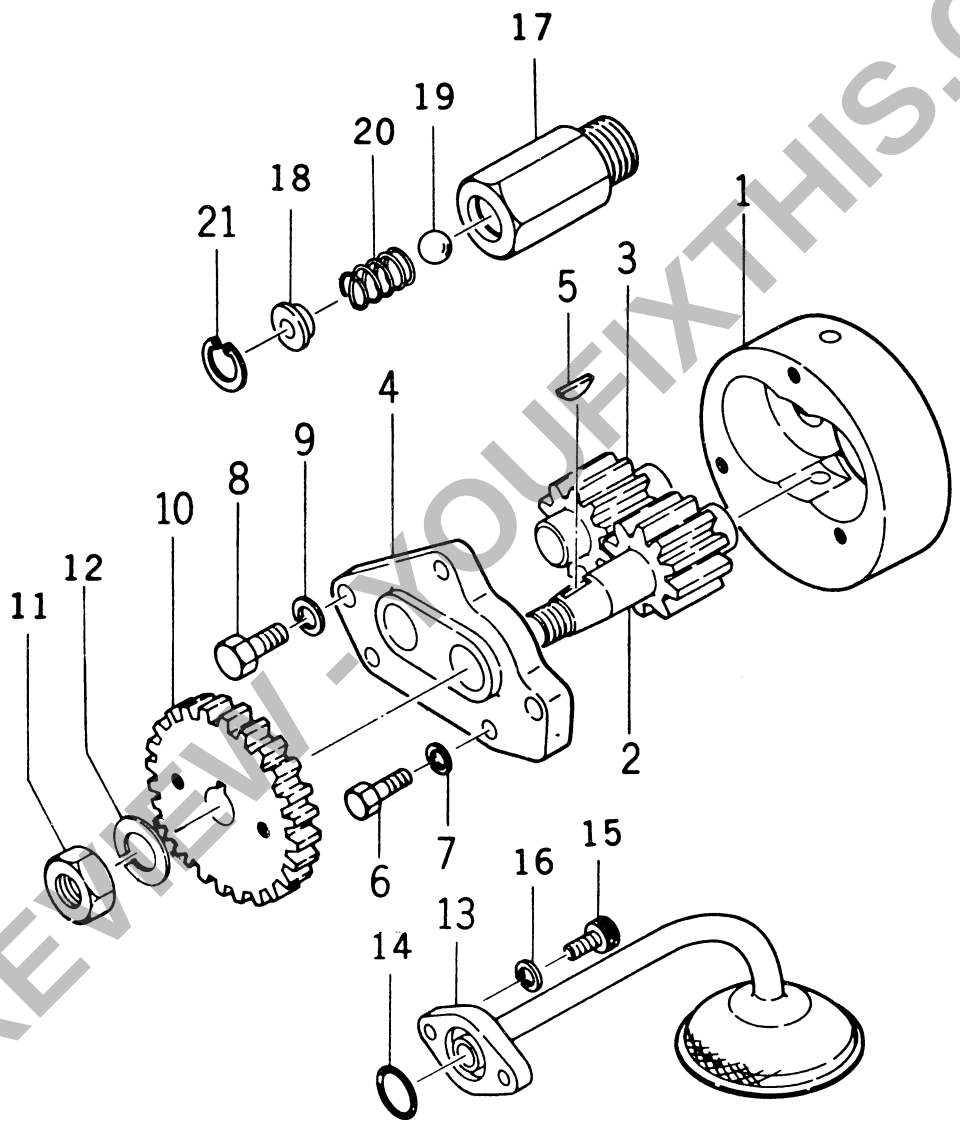

Figure 31
Exploded View of Oil Pump, Filter and Pressure Relief Valve

1. Pump Housing
2. Gear, Long Shaft
3. Gear, Short Shaft
4. Pump Cover
5. Key
6. Bolt
7. Washer
8. Bolt
9. Washer
10. Gear
11. Nut
12. Lock Washer
13. Filter
14. O-Ring
15. Capscrew
16. Lockwasher
17. Relief Valve Housing
18. Spring Holder
19. Ball
20. Spring
21. Snap Ring

PREVIEW - YOUFIXTHIS.COM

Download full manual at youfixthis.com

2. SPECIFICATIONS

ENGINE

Blurred on purpose. The manual you buy has this page in full quality.

PREVIEW - YOUFIXTHIS.COM

Download full manual at youfixthis.com

PART 3

ELECTRICAL SYSTEM

CHAPTER 1

Blurred on purpose. The manual you buy has this page in full quality.

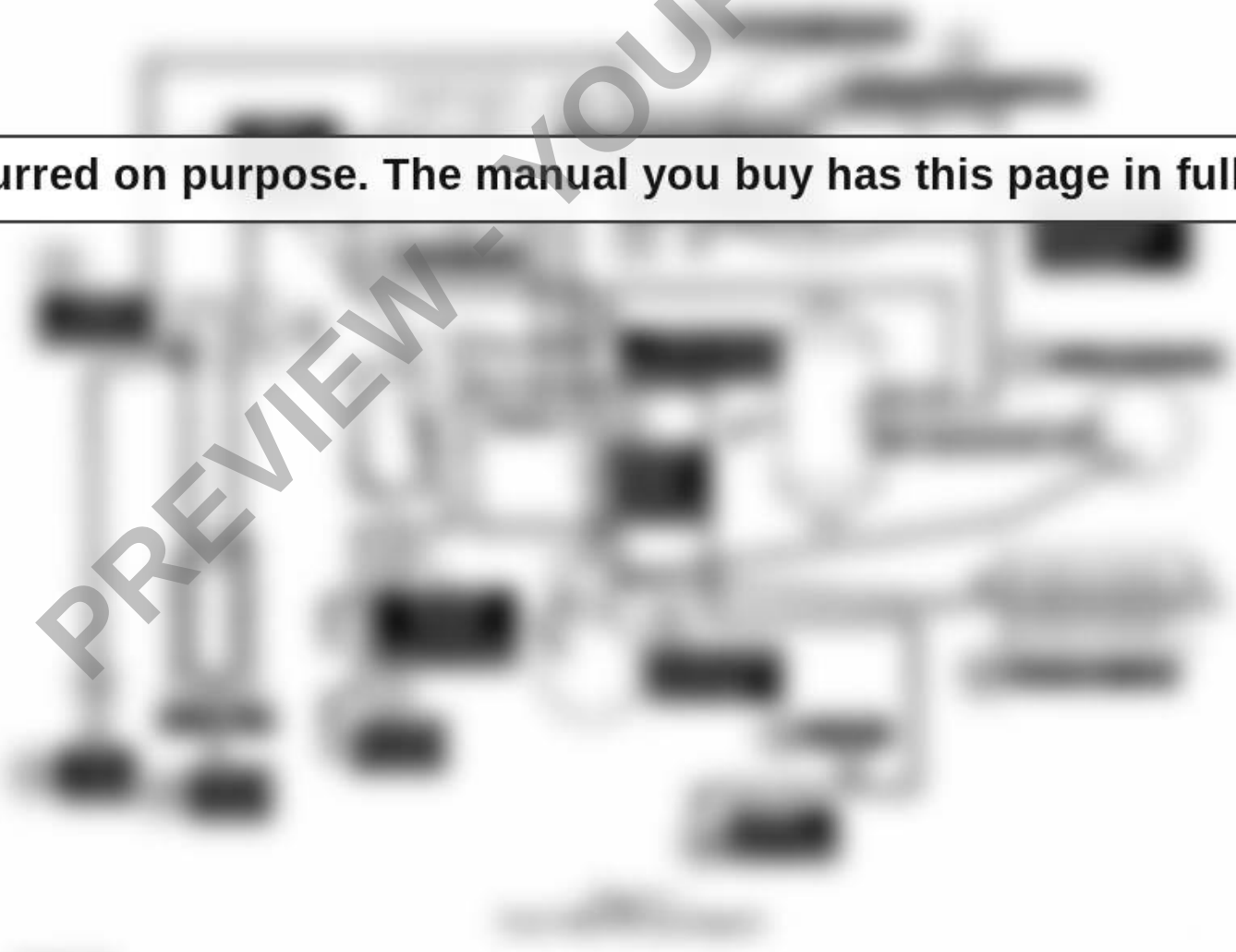

PREVIEW - YOUFIXTHIS.COM

Download full manual at youfixthis.com



slot in the bracket, an attached implement can rise over obstructions and avoid damage. For transporting mounted equipment, install the bracket pin through the rocker and

PREVIEW - YOUFIXTHIS.COM

Blurred on purpose. The manual you buy has this page in full quality.

Download full manual at youfixthis.com

Part 1

ENGINE

Chapter 3

TROUBLE SHOOTING AND SPECIFICATIONS

Section		Page
1.	Trouble Shooting	25
2.	Specifications	27

1. TROUBLE SHOOTING

Trouble	Possible Causes
Engine Does Not Develop Full Power	1. Clogged air cleaner. 2. Fuel line obstructed. 3. Improper injection timing. 4. Improper nozzle injection pressure and angle. 5. Low cylinder compression. 6. Insufficient fuel injection. 7. Improper valve lash adjustment. 8. Burned, worn or sticking valves. 9. Blown head gasket. 10. Worn or sticking piston ring.
Low Cylinder Compression	1. Burned, worn, or sticking valves. 2. Bent valve stem. 3. Broken or weak valve spring. 4. Blown cylinder head gasket. 5. Worn or sticking piston ring. 6. Blown piston.
Poor Engine Idling	1. Improper injection timing. 2. Air in injection pump. 3. Improper governor adjustment.
Engine Knocks	1. Diluted or thin oil. 2. Insufficient oil supply. 3. Low oil pressure. 4. Worn crankshaft thrust bearing. 5. Excessive flywheel runout. 6. Excessive connecting rod or main bearing clearance. 7. Seized bearing. 8. Clogged oil passages. 9. Bent or twisted connecting rod. 10. Crankshaft journals out-of-round. 11. Excessive piston-to-cylinder bore clearance. 12. Excessive piston ring side clearance. 13. Broken or damaged rings. 14. Excessive piston pin clearance. 15. Seized piston. 16. Piston pin retainer loose or missing. 17. Improper valve lash adjustment. 18. Worn valve lifter. 19. Excessive timing gear backlash.

PREVIEW - YOUFIXTHIS.COM
Download full manual at youfixthis.com

TABLE OF CONTENTS

Part	Page
PART 1 — ENGINE	
Chapter 1 — Engine and Lubrication System	1
Chapter 2 — Cooling System	20
Chapter 3 — Trouble Shooting and Specifications	25
PART 2 — FUEL SYSTEM	
Chapter 1 — Diesel Fuel System	31
Chapter 2 — Trouble Shooting and Specifications	36
PART 3 — ELECTRICAL SYSTEM	
Chapter 1 — Wiring, Lights, and Instruments	38
Chapter 2 — Alternator Charging System	41
Chapter 3 — Battery	49
Chapter 4 — Starting System	54
Chapter 5 — Trouble Shooting and Specifications	60
PART 4 — CLUTCH	
Chapter 1 — Clutch Assembly	64
Chapter 2 — Trouble Shooting, Specifications, and Special Tools	68
PART 5 — TRANSMISSION, DIFFERENTIAL, REAR AXLE, AND RELATED PARTS	
Chapter 1 — Servicing the Transmission and Differential	70
Chapter 2 — Rear Axle, Brakes, Differential Lock, and PTO Shaft	79
Chapter 3 — Trouble Shooting and Specifications	86
PART 6 — HYDRAULICS	
Chapter 1 — Hydraulic System	89
Chapter 2 — Trouble Shooting, Specifications, and Special Tools	97
PART 7 — STEERING AND FRONT AXLE	
Chapter 1 — Steering Gear Assembly	99
Chapter 2 — Front Axle and Related Parts	102
Chapter 3 — Trouble Shooting and Specifications	106
PART 8 — WHEELS AND TIRES	
Chapter 1 — Rear Wheel Track Adjustment and Weighting Procedures	108

PREVIEW - YOUFIXTHIS.COM

Download full manual at youfixthis.com

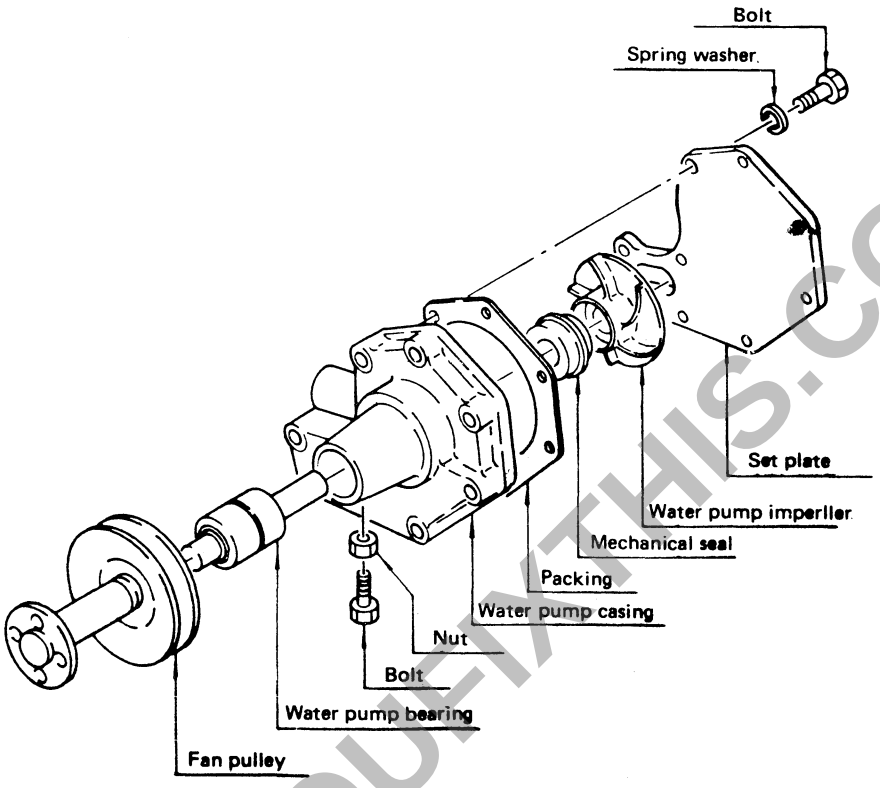

Figure 45
Exploded View of Water Pump

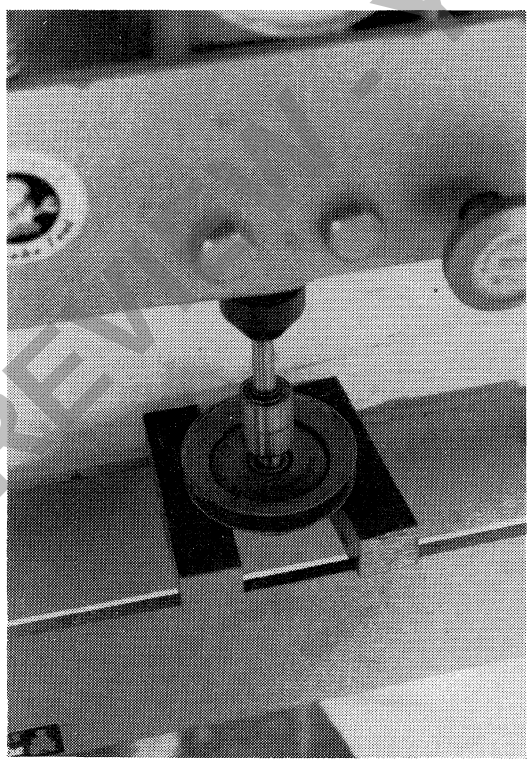

Figure 46
Bearing Installation

components. Use this figure for reference during reassembly. Using a press, install the bearing into the fan pulley, Figure 46.

2. Place the bearing into the pump casing using a press. Align the water pump casing bolt hole with the bearing outer race set hole.

3. Coat the casing side of the mechanical seal with a sealer and insert the seal into the casing.

4. Coat the mechanical seal impeller side with oil and install the impeller over the shaft using a press. Make sure that there is a standard clearance as shown in Figure 47.

5. Coat a new water pump gasket with a sealer and install the gasket and set plate onto the pump. Tighten the bolts to the specified torque, page 30.

6. Install the fan on the pulley. Tighten the bolts to the specified torque, page 30.

7. Rotate the pulley to make sure that the water pump operates smoothly.

PREVIEW ONLY YOUFIXTHIS.COM
Download full manual at youfixthis.com

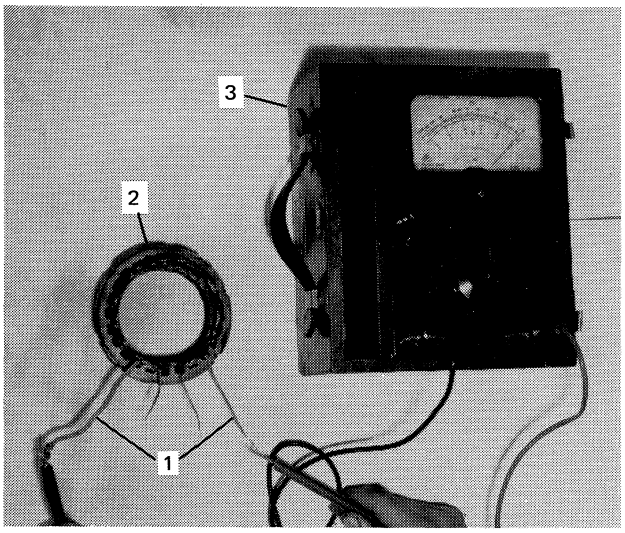

Figure 10
Conduction Test Between Stator Terminals

1. Stator Terminals
2. Stator Coil
3. Tester

conduction between the stator coil and the core. If conduction exists, the stator coil assembly must be replaced.

2. Check the conduction between the stator coil terminals as shown in Figure 10. If conduction does not exist between the terminals, replace the stator coil assembly.

Rotor Coil

1. Check the insulation of the rotor coil as shown in Figure 11. There should be no conduction between the slip ring and the core or the shaft of the rotor. If conduction exists, the rotor assembly must be replaced.

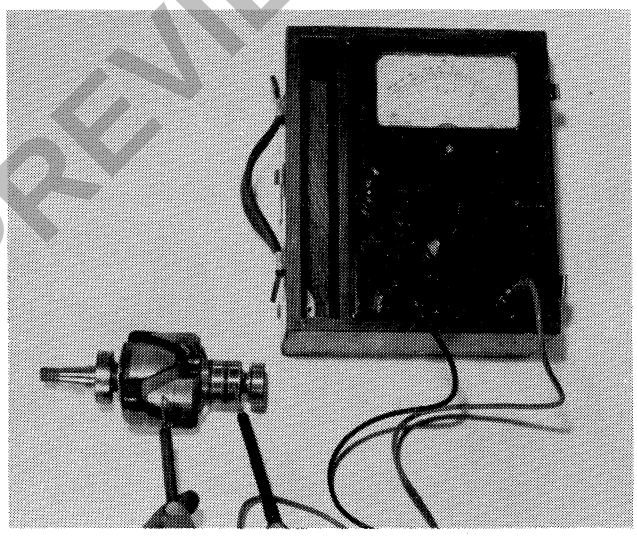

Figure 11
Insulation Test of Rotor Coil

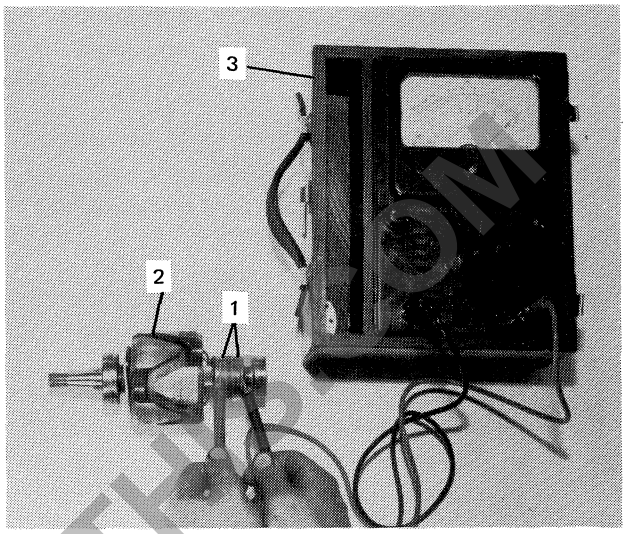

Figure 12
Conduction Test of Slip Rings

1. Slip Rings
2. Rotor Coil
3. Tester

2. Check the conduction between the two slip rings as shown in Figure 12. If no conduction exists between the slip rings, replace the rotor assembly.

Diode

1. Connect one test lead to the output terminal stud of the diode and the other to the exposed metal area on the auxiliary terminal of the heat sink, Figure 13.

2. Repeat the test with the leads reversed as shown in Figure 14.

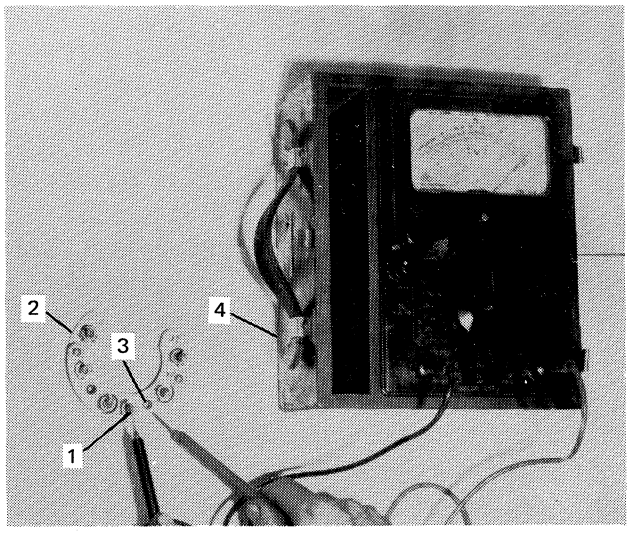

Figure 13
Conduction Test of Silicon Diodes

1. Output Terminal
2. Diode Assembly
3. Bare Metal
4. Tester

PREVIEW - YOUFIXTHIS.COM

Download full manual at youfixthis.com

3. Locate the pressure plate assembly on the flywheel and install the locating bolts and lockwashers, Figure 5. Tighten the bolts evenly to the specified torque, page 69, then remove the pilot shaft.

4. Install the transmission input shaft if removed.

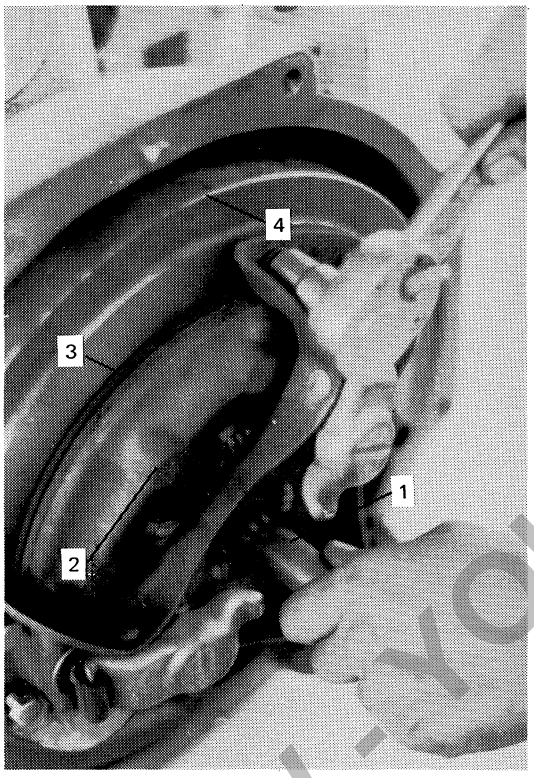

Figure 5
Installing the Clutch Disc and Pressure Plate

1. Pilot Shaft
2. Pressure Plate
3. Clutch Disc
4. Flywheel

5. Install the release bearing on the bearing release hub and move the hub to the rear of the clutch case. Connect the return spring to the hub and spring hanger, Figure 6.

6. Re-connect the engine and clutch housing as outlined in Part 1, "Engine – Installation."

7. Check and adjust the clutch free travel play as outlined in Section 2, "Adjustments."

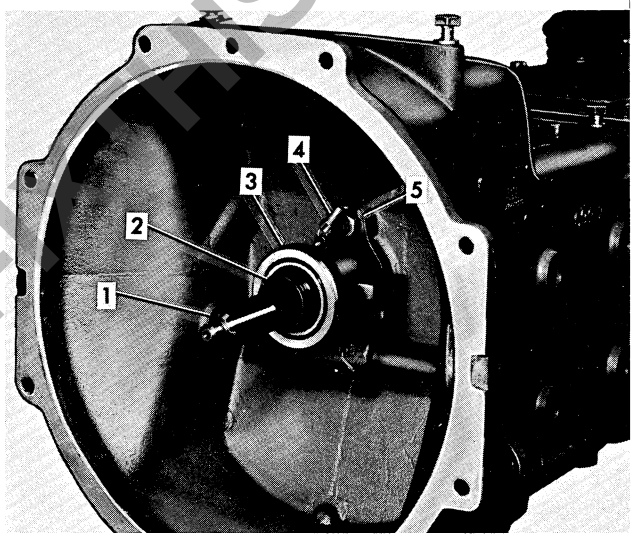

Figure 6
Release Bearing and Hub

1. Input Shaft
2. Hub
3. Release Bearing
4. Spring
5. Hanger

PREVIEW - YOUFIXTHIS.COM

Download full manual at youfixthis.com

PART 6

HYDRAULICS

CHAPTER 1

HYDRAULIC SYSTEM

Section	Page
1. Description and Operation	89
2. Adjustments and Pressure Test	92
3. Hydraulic Lift Cover Overhaul	93
4. Hydraulic Pump	95
5. Hydraulic Control Valve	96

1. DESCRIPTION AND OPERATION

The Ford 1000 hydraulic system is controlled by a single lever. An adjustable stop on the quadrant provides a reference for returning to a previous working depth (height) when intermittent changes in working depth are required, such as raising an implement for transport, see Figure 1.

This hydraulic system differs from other Ford hydraulic systems in that, the control valve is externally mounted, a separate reservoir is used, the lift cylinder is a replaceable sleeve rather than part of the control valve casting, and the system is almost entirely externally mounted, thus providing accessibility for service.

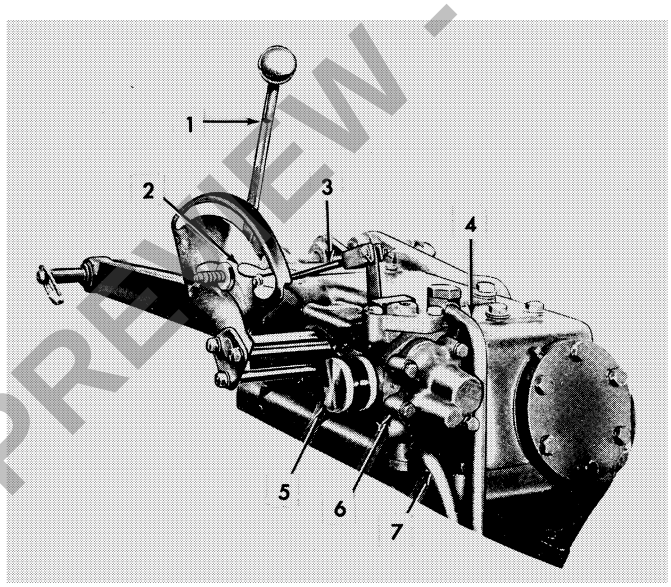

FIGURE 1
Hydraulic System Controls

1. Lift Control Lever
2. Adjustable Stop
3. Position Control Link
4. Oil Return Line
5. Flow Control (Drop Restrictor) Knob
6. Control Valve Assembly
7. Pressure Line

A flow control knob, Figure 1, provides for control of the rate of drop of the lift linkage. The device actually functions as a drop restrictor. An external position control link connects the lift arm to the control valve. This adjustable link transmits lift arm movement to the control valve spool linkage to return the spool to neutral once the desired amount of lift has been obtained. The pressure line connects to the bottom of the control valve, and the return line connects to the top of the lift cover.

POSITION CONTROL LINKAGE

Position control results from the ability to use lift shaft rotation to move the control valve spool from a raise or lowering position to neutral.

The lift control lever is connected by a shaft to a cam. The cam moves the upper end of the actuating lever forward or rearward as the lift control lever is lowered or raised. Refer to Figure 2. The actuating lever, in turn, pivots on the position control cam, and the lower end is in contact with the control valve spool. As the lift control lever is raised on the quadrant, the lower end of the actuating lever is thrust forward, pushing the control valve spool forward to initiate a raise action.

To stop the raise action without moving the lift control lever, the actuating lever pivot must move rearward to allow the spool to move to neutral. This is done by connecting the position control cam to the lift arm by the position

PREVIEW - YOUFIXTHIS.COM
Download full manual at youfixthis.com

PREVIEW ONLY

You're viewing 11 of 116 pages

The full manual includes:

- All 116 pages, complete
- Searchable PDF (find any keyword)
- No watermarks
- Instant download
- Print-ready quality

GET FULL MANUAL NOW

Ford 1000, 1600 Service Manual

Scan or click anywhere
youfixthis.com

Click anywhere on this page to get the full manual