www.manuallook.com

returns to the main oil gallery in the area of the drilled bolt located on the side of the block. Oil flow in the main oil gallery extends to the four main bearings. Oil flow to the main bearings passes through drilled passages in the crankshaft to the three connecting rod bearings. The remaining portion of the oil flow is directed through the external tube to the rocker arm assembly. Oil flows from the external tube into a passage in the rocker arm bracket to the rocker shaft.

Oil leakage from clearance between the rocker arms and the shaft overflows in the valve cover and lubricates the valve stems, push rods and tappets.

The relief valve is mounted in the side of the block and intersects the main oil passage. When the oil pressure exceeds the rated pressure, oil is by-passed through the relief valve directly to sump.

The cylinder walls, pistons and piston pins are splash lubricated by the crankshaft.

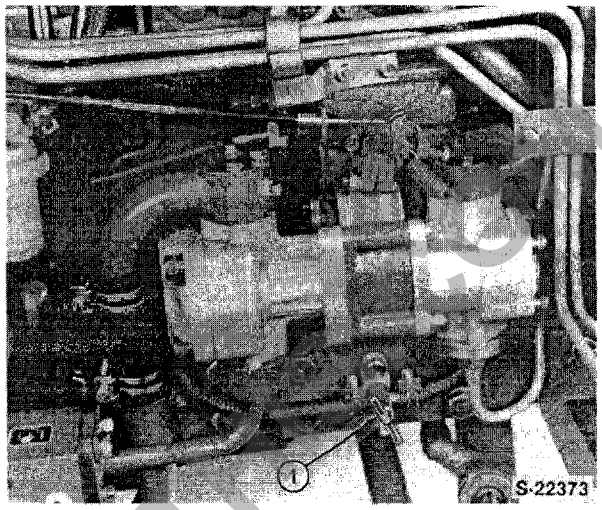

Figure 1
Radiator Drain Cock

1. Coolant Drain Cock

B. ENGINE OVERHAUL

CYLINDER HEAD AND RELATED COMPONENTS

REMOVAL

1. Drain the radiator assembly, Figure 1.
2. Remove the air cleaner assembly along with the air cleaner hoses, Figure 2.
3. Remove the upper radiator hose from the cylinder head, Figure 2.
4. Remove the exhaust muffler and manifold assembly, Figure 3.

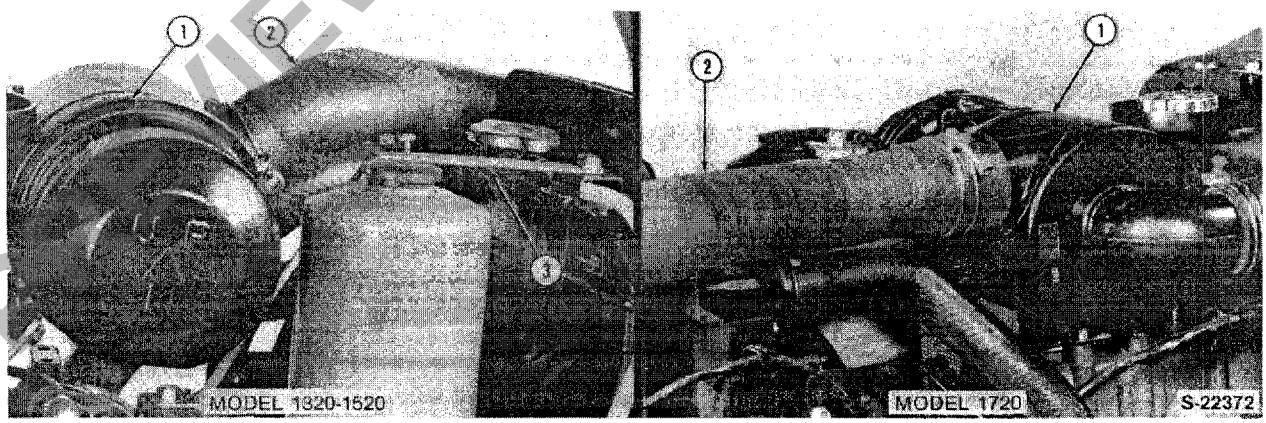

Figure 2
Air Cleaner Removal

1. Air Cleaner Assembly
2. Air Intake Tube
3. Radiator Support Brace (Model 1320/1520)

Download full manual at youfixthis.com

www.manuallook.com

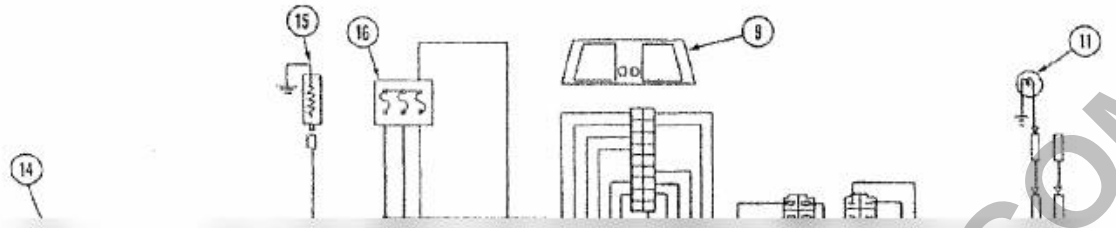

Blurred on purpose. The manual you buy has this page in full quality.

PREVIEW - YOUFIXTHIS.COM

Download full manual at youfixthis.com

www.manuallook.com

3. Principle of IC Regulator

The basic circuit of the IC regulator is shown in Figure 74. The part enclosed by a dotted line represents the IC regulator.



2. When the alternator begins to rotate, A.C. voltages are generated in the stator coil. The diodes in the rectifier assembly change the stator A.C. voltages to a D.C. voltage which appears between ground and the terminal B.

The stator also supplies D.C. field current through the diode trio, the field coil, Tr2 and then through

PREVIEW - YOUFIXTHIS.COM

Blurred on purpose. The manual you buy has this page in full quality.

Download full manual at youfixthis.com

www.manuallook.com

METRIC BOLT TORQUE SPECIFICATIONS

Bolt Size	Grade No.	Coarse Thread			Fine Thread		
		Pitch (mm)	Pounds-Feet	Newton-Meters	Pitch (mm)	Pounds-Feet	Newton-Meters
M6	4T	1.0	3.6– 5.1	4.9– 6.9	–	–	–
	7T		6.1– 8.3	8.3– 11.3			
	10T		8.7– 11.6	11.8– 15.7			

PREVIEW - YOUFIXTHIS.COM

Blurred on purpose. The manual you buy has this page in full quality.

Download full manual at youfixthis.com

www.manuallook.com

PART 1
ENGINE SYSTEMS
MODELS 1320-1520-1720

Chapter 3
TROUBLE SHOOTING, SPECIFICATIONS AND SPECIAL TOOLS

Section		Page
A.	TROUBLE SHOOTING	41
B.	SPECIFICATIONS	45
C.	SPECIAL TOOLS	52
D.	COMPRESSION TEST AND TOOLS	53

PREVIEW - YOUFIXTHIS.COM

A. TROUBLE SHOOTING

ENGINE

CONDITION	POSSIBLE CAUSES
Engine Does Not Develop Full Power	1. Clogged air cleaner. 2. Fuel line obstructed. 3. Improper injection timing. 4. Improper nozzle injection pressure and angle. 5. Low cylinder compression. 6. Insufficient fuel injection. 7. Improper valve lash adjustment. 8. Burned, worn or sticking valves. 9. Blown head gasket. 10. Worn or sticking piston rings. 11. Faulty engine stop solenoid.
Engine Will Not Stop	1. Faulty engine stop solenoid. 2. Faulty starter switch.
Low Cylinder Compression	1. Burned, worn or sticking valves. 2. Bent valve stem. 3. Broken or weak valve spring. 4. Blown cylinder head gasket. 5. Worn or sticking piston ring. 6. Scored piston.
Poor Engine Idling	1. Improper injection timing. 2. Air in injection pump. 3. Improper governor adjustment.

Download full manual at youfixthis.com

www.manuallook.com

B. SPECIFICATIONS

GENERAL SPECIFICATIONS

Tractor Model	1320	1520	1720
Engine Model	J823	J843	N843
Number of Cylinders	3	3	3
Bore x Stroke	3.22 x 3.15 in. (82 x 80 mm)	3.31 x 3.15 in. (84 x 80 mm)	3.31 x 3.54 in. (84 x 90 mm)
Displacement	77.2 cu. in.	81.1 cu. in.	91.2 cu. in.

Blurred on purpose. The manual you buy has this page in full quality.

PREVIEW - YOUFIXTHIS.COM

Download full manual at youfixthis.com

www.manuallook.com

SAFETY PRECAUTIONS

Practically all service work involves the need to drive the tractor. The Operator's Manual, supplied with each tractor, contains detailed safety precautions relating to driving, operating and servicing that tractor. These precautions are as applicable to the service technician as they are to the operator, and should be read, understood and practiced by all personnel.

Prior to undertaking any maintenance, repair, overhaul, dismantling or re-assembly operations, whether within a workshop facility or out "in the field," consideration should be given to factors that may have an effect upon safety, not only upon the mechanic carrying out the work, but also upon bystanders.

PERSONAL CONSIDERATIONS

- The wrong clothes or carelessness in dress can cause accidents. Check to see that you are suitably clothed.

  Some jobs require special protective equipment.

- **Eye Protection**
  The smallest eye injury may cause loss of vision. Injury can be avoided by wearing eye protection when engaged in chiselling, grinding, discing, welding, painting, etc.

- **Breathing Protection**
  Fumes, dust and paint spray are unpleasant and harmful. These can be avoided by wearing respiratory protection.

- **Hearing Protection**
  Loud noise may damage your hearing and the greater the exposure the worse the damage. If you feel the noise is excessive, wear ear protection.

- **Hand Protection**
  It is advisable to use a protective cream before work to prevent irritation and skin contamination. After work clean your hands with soap and water. Solvents such as white spirit, paraffin, etc., may harm the skin.

- **Foot Protection**
  Substantial or protective footwear with reinforced toe-caps will protect your feet from falling objects. Additionally, oil-resistant soles will help to avoid slipping.

- **Special Clothing**
  For certain work it may be necessary to wear flame or acid-resistant clothing.

- Avoid injury through incorrect handling of components. Make sure you are capable of lifting the object. If in doubt get help.

EQUIPMENT CONSIDERATIONS

- **Machine Guards**
  Before using any machine, check to ensure that the machine guards are in position and serviceable. These guards not only prevent parts of the body or clothing from coming in contact with the moving parts of the machine, but also ward off objects that might fly off the machine and cause injury.

- **Lifting Appliances**
  Always ensure that lifting equipment, such as chains, slings, lifting brackets, hooks and eyes are thoroughly checked before use. If in doubt, select stronger equipment than is necessary.

  Never stand under a suspended load or a raised implement.

- **Compressed Air**
  The pressure from a compressed air line is often as high as 100 psi (6.9 bar) 7 (kgf/cm²). It is perfectly safe if used correctly. Any misuse may cause injury.

  Never use compressed air to blow dust, filing, dirt, etc., away from your work area unless the correct type of nozzle is fitted.

  Compressed air is not a cleaning agent, it will only move dust, etc., from one place to another. Look around before using an air hose as bystanders may get grit into their eyes, ears or skin.

PREVIEW - YOUFIXTHIS.COM

Download full manual at youfixthis.com

www.manuallook.com

Model	Max. Inside Diameter
1320-1520	.984 in. (25.0 mm)
1720	1.106 in. (28.08 mm)

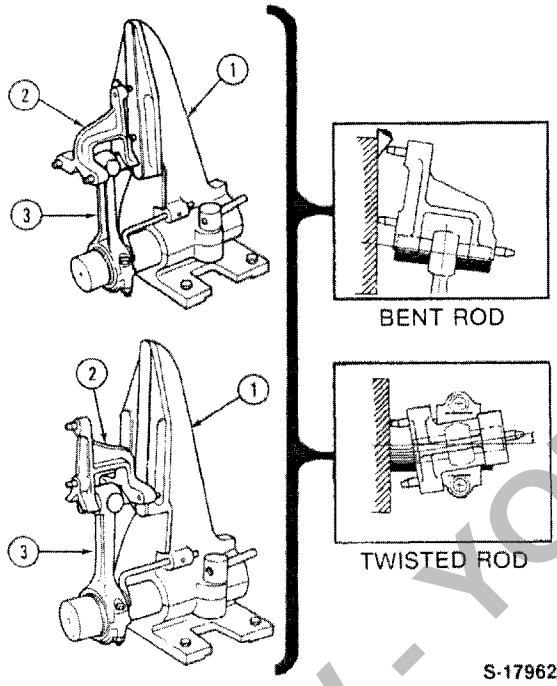

Figure 59
Connecting Rod Alignment Check
1. Alignment Fixture
2. Gauge
3. Connecting Rod

3. Remove and install the connecting rod pin bushings using a suitable driver, Figure 61, and press a new bushing into the rod bore.

4. Ream and hone the bushing to the following finished size:

Pin to Bushing Clearance

Model	Std.	Max.
All	.00039-.00098 in. (.010-.25 mm)	.0031 in. (.08 mm)

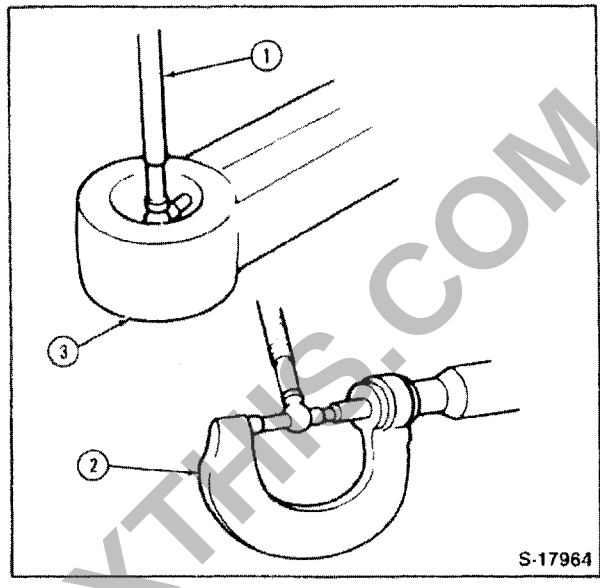

Figure 60
Connecting Rod Bushing Wear Check
1. Hole Gauge
2. Micrometer
3. Connecting Rod

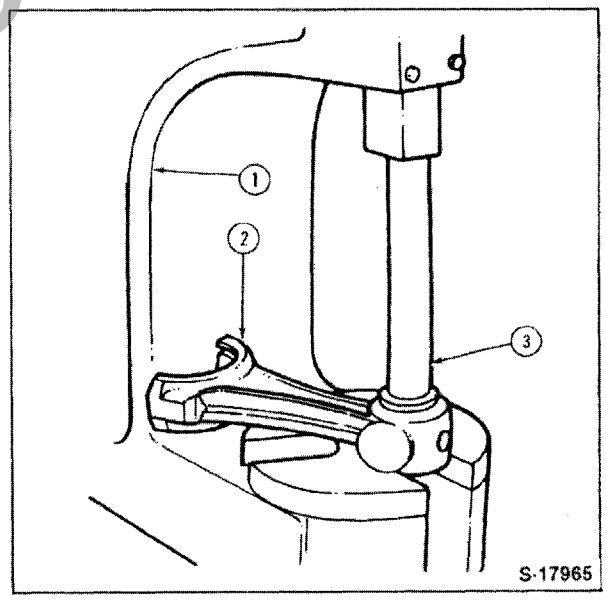

Figure 61
Connecting Rod Bushing Removal and Installation
1. Press
2. Connecting Rod
3. Bushing Driver

5. When installing a new pin bushing, use the hole in the rod as a guide and drill a lube hole in the new bushing, Figure 62.

PREVIEW - YOUFIXTHIS.COM

Download full manual at youfixthis.com

www.manuallook.com

B. SPECIFICATIONS (continued)

CAMSHAFT	1320	1520	1720
Cam Height-Valve			
Standard	1.341-1.343 in. (34.065-34.12 mm)	1.341-1.343 in. (34.065-34.12 mm)	1.3411-1.3433 in. (34.065-34.12 mm)
Minimum	1.327 in. (33.7 mm)	1.327 in. (33.7 mm)	1.3268 in. (33.7 mm)
Bend			
Standard	.001 in. (.03 mm)	.001 in. (.03 mm)	.001 in. (.03 mm)
Maximum	.004 in. (.1 mm)	.004 in. (.1 mm)	.004 in. (.1 mm)
Cam Height-Fuel			
Standard	1.651-1.656 in. (41.94-42.06 mm)	1.651-1.656 in. (41.94-42.06 mm)	1.651-1.656 in. (41.94-42.06 mm)
Minimum	1.646 in. (41.8 mm)	1.646 in. (41.8 mm)	1.646 in. (41.8 mm)

VALVES	1320	1520	1720
Stem Diameter — Intake			
Standard	.2738-.2744 in. (6.955-6.97 mm)	.2738-.2744 in. (6.955-6.97 mm)	.2738-.2744 in. (6.955-6.97 mm)
Minimum	.271 in. (6.89 mm)	.271 in. (6.89 mm)	.271 in. (6.89 mm)
Stem Diameter — Exhaust			
Standard	.273-.274 in. (6.94-6.95 mm)	.273-.274 in. (6.94-6.95 mm)	.273-.274 in. (6.94-6.95 mm)
Minimum	.269 in. (6.84 mm)	.269 in. (6.84 mm)	.269 in. (6.84 mm)
Guide Clearance — Intake			
Standard	.001-.002 in. (.03-.06 mm)	.001-.002 in. (.03-.06 mm)	.001-.002 in. (.03-.06 mm)
Maximum	.008 in. (.2 mm)	.008 in. (.2 mm)	.008 in. (.2 mm)
Guide Clearance — Exhaust			
Standard	.002.003 in. (.04-.065 mm)	.002.003 in. (.04-.065 mm)	.002.003 in. (.05-.075 mm)
Maximum	(.010 in. (.25 mm)	.010 in. (.25 mm)	.010 in. (.25 mm)
Valve Margin			
Standard	.0364-.0423 in. (0.925-1.075 mm)	0.0364-.0423 in. (0.925-1.075 mm)	.0364-.0423 in. (.925-1.075 mm)
Maximum	.0197 in. (0.5 mm)	.0197 in. (0.5 mm)	.020 in. (.5 mm)
Valve Lash	0.008 in. (0.2 mm)	0.008 in. (0.2 mm)	.008 in. (.2 mm)
Valve Spring — Free Height			
Standard	1.378 in. (35 mm)	1.378 in. (35 mm)	1.378 in. (35 mm)
Minimum	1.319 in. (33.5 mm)	1.319 in. (33.5 mm)	1.319 in. (33.5 mm)

PREVIEW - YOUFIXTHIS.COM

Download full manual at youfixthis.com

www.manuallook.com

PART 3
ELECTRICAL SYSTEM

Chapter 1
WIRING, SWITCHES, GLOW PLUGS AND INSTRUMENTATION

Section		Page
A.	DESCRIPTION AND OPERATION	1
B.	OVERHAUL	7

PREVIEW - YOUFIXTHIS.COM

A. DESCRIPTION AND OPERATION

WIRING

Reference — Figures 1 and 2

The tractor wiring consists of a front and rear main wiring harness equipped with fool-proof connectors to the sub-wiring harnesses.

SWITCHES

KEY START SWITCH
See Chapter 3, Section E.

NEUTRAL START SWITCHES
See Chapter 3, Section E.

LIGHT SWITCH

The light switch (1), Figure 3, is a dial type switch. 1st position is off, 2nd position (turn the switch clockwise) is high beam, 3rd position is low beam.

FLASHER SWITCH

The flasher warning light switch is combined with the head light switch, Figure 3, and is located on the instrument panel.

COOLANT TEMPERATURE SWITCH

The coolant temperature sender switch, Figure 4, senses coolant overheating, and causes the temperature gauge (5), to register, Figure 3.

OIL PRESSURE SWITCH

The oil pressure sender switch is located on the top front side of the engine, Figure 5. The switch opens under normal oil pressure and closes at low oil pressure to illuminate the warning light (6) on the instrument panel, Figure 3.

The warning light should illuminate when the key switch is turned on and go out when the engine is started. If the light does not go out, check the engine oil level first before checking for a malfunction of the sender switch and engine oil pump.

PRINTED IN U.S.A.

Download full manual at youfixthis.com

www.manuallook.com

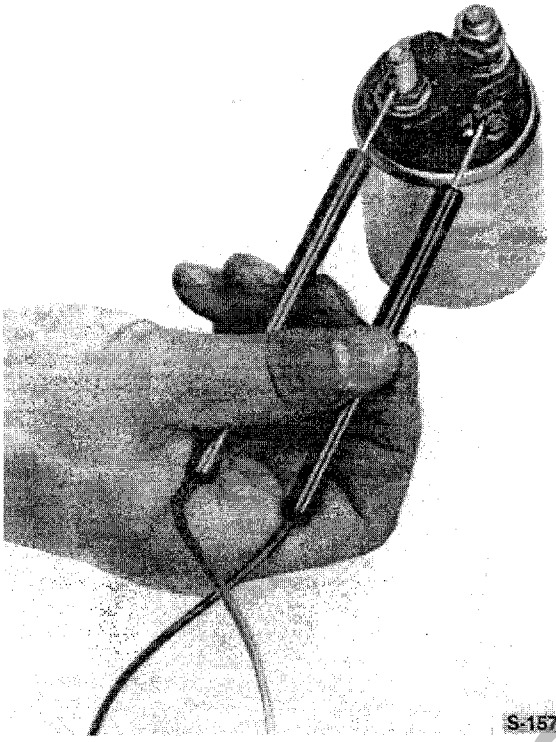

Figure 54
Solenoid Pull-In Coil Continuity Check

Test Results

Low resistance reading = Good.

High resistance reading = Faulty coil — Replace solenoid.

7. Solenoid Coil — Hold-in Coil Continuity Test

Using a ohmmeter, touch one ohmmeter lead to the switch terminal and the other lead to the solenoid housing and observe the ohmmeter reading, Figure 55.

Test Results

Low resistance reading = Good.

High resistance reading = Faulty coil — Replace solenoid



Figure 55
Solenoid Hold-In Coil Continuity Check

ASSEMBLY AND ADJUSTMENTS

Assembly of the starter generally follows the disassembly procedure in reverse, see Figure 56.

PINION CLEARANCE CHECK AND ADJUSTMENT

Bench check the assembled starter as follows:

Reference — Figure 57

1. Remove the field coil wire from the solenoid terminal (1) and insulate the wire from the housing.

   NOTE: *Failure to disconnect and insulate the wire will cause the motor to spin when the battery is connected.*

2. Use a battery and connect a jumper cable from the battery negative terminal to the starter housing, Figure 57.

3. Connect a jumper wire from the battery positive post to the solenoid switch terminal.

4. Connect a jumper wire to the solenoid motor terminal and touch the other end to the starter housing, Figure 57.

PREVIEW - YOUFIXTHIS.COM

Download full manual at youfixthis.com

www.manuallook.com

B. SPECIFICATIONS (Con'd)

ALTERNATOR	
Model	MITUBISHI
Rating	35 Amps at 12 Volts Max
Rotor Coil Resistance	3-4 Ohm at 68°F (20°C)
Stator Coil Resistance	.14 Ohm at 68°F (20°C)
Slip Ring — Std. Diameter	1.299 in. (33 mm)
Slip Ring Wear Limit	1.276 in. (32.4 mm)
Brush Length	
Std.	.71 in. (18 mm)
Wear Limit	.315 in. (8 mm)
Drive Belt Tension	.19 in. (5 mm)

PREVIEW - YOUFIXTHIS.COM

Download full manual at youfixthis.com

www.manuallook.com

PART 5
TRANSMISSION SYSTEMS

Chapter 1
9 x 3 GEAR TRANSMISSION — MODEL 1320-1520

Section		Page
A.	DESCRIPTION AND OPERATION	1
B.	OVERHAUL	4
C.	SHIFT LEVERS	12

PREVIEW - YOUFIXTHIS.COM

A. DESCRIPTION AND OPERATION

The standard 9 x 3 gear transmission is a three range gearbox with each range having three forward and one reverse speed, for a total of nine forward and three reverse speeds, Figure 1.

Two gearshift levers control the operation of the transmission, Figure 2.

The range selector lever (1), Figure 2, controls operation of the range transmission.

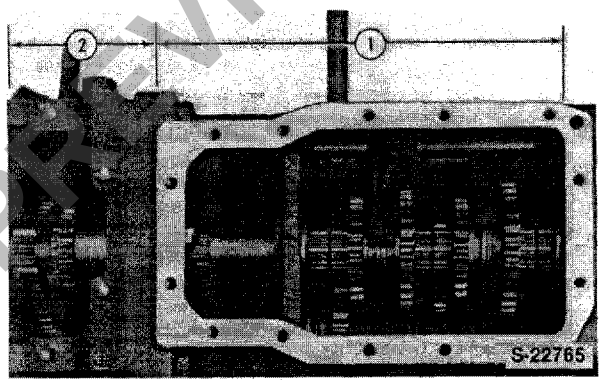

Figure 1
9 x 3 Gear Transmission — Model 1320-1520
1. Main Transmission Gearbox
2. Range Gearbox

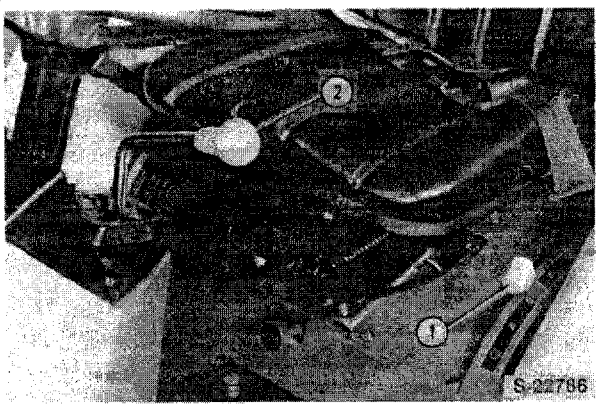

Figure 2
Shift Levers
1. Range Shift Lever
2. Main Shift Lever

The main shift lever (2), Figure 2, controls the three forward and one reverse speeds of the main transmission.

The transmission housing is a part of a common oil reservoir which provides gear lubricant for the differential and transmission and hydraulic system. The oil used is Ford 134B or equivalent.

The oil fill plug (1), Figure 3, is located on the rear of the hydraulic lift cover. The oil level check dipstick (2) is located on the transmission cover.

PRINTED IN U.S.A.

Download full manual at youfixthis.com

www.manuallook.com

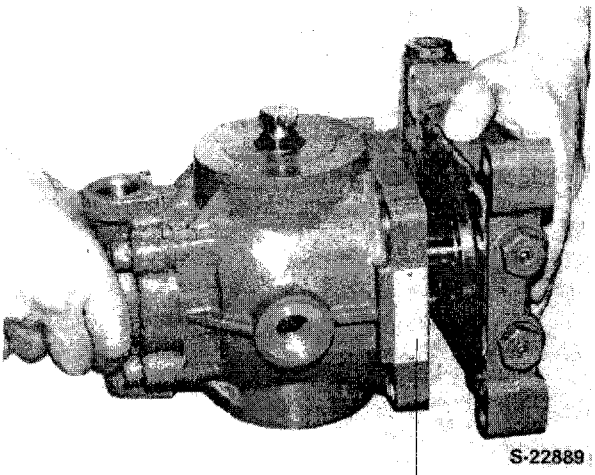

Figure 71
Hydrostatic Pump and Port Block Assembly

Tightening Torque . . . . . 25.3 ± 2.5 lbs. ft.
(34.3 ± 3.4 Nm)

MOTOR AND PORT BLOCK — ASSEMBLY

1. Using a straight edge and feeler gauge, measure the depth of the cylinder block surface below the housing end. Clearance should be approximately 0.078 in. (2.0 mm), Figure 72.

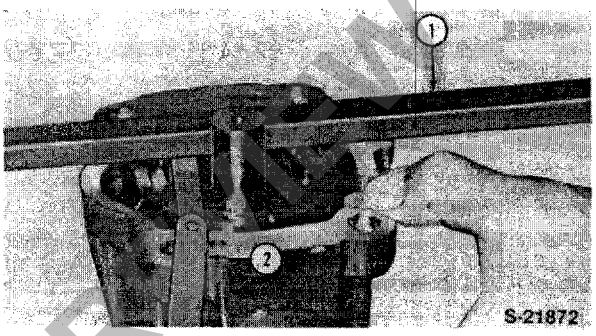

Figure 72
Motor and Port Block Assembly
1. Straight Edge 2. Feeler Gauge

If insufficient clearance is found, disassemble the motor assembly and recheck the position of the thrust plate and assembly procedures.

2. If removed, install the two dowel pins in the motor housing.

3. Coat the surface of the gasket with lithium base grease and position it on the motor housing,.

4. Install the port valve plate onto the port block, Figure 73.

5. Install the assembled motor housing to the port block, Figure 74.

6. Tighten the four socket head type bolts. Be sure the input and output shafts rotate freely and then apply the final tightening to the bolts, Figure 75.

Tightening Torque . . . . . 25.3 ± 2.5 lbs. ft.
(34.3 ± 3.4 Nm)

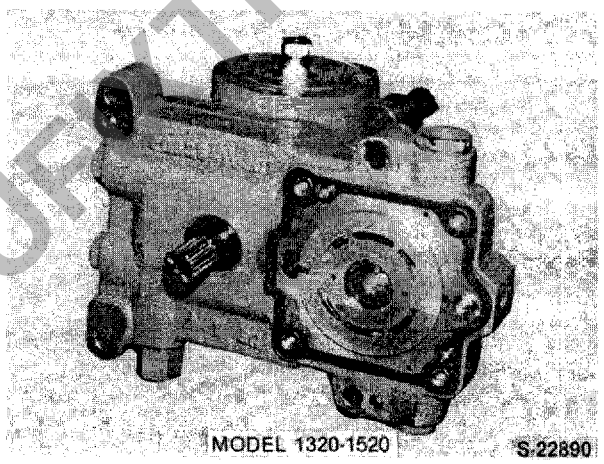

Figure 73
Motor and Port Block Assembly

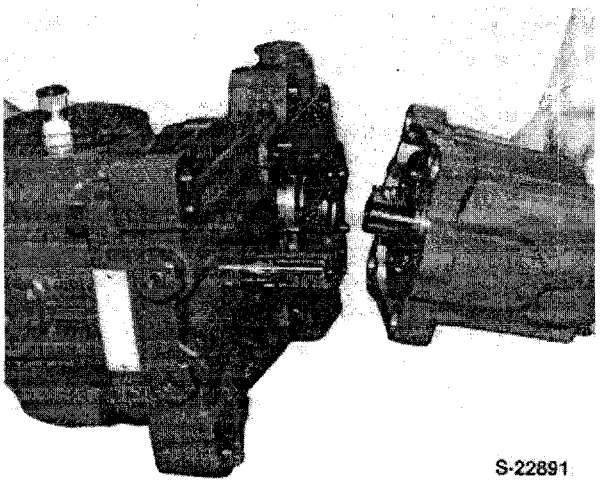

Figure 74
Motor and Port Block Assembly

PREVIEW - YOUFIXTHIS.COM

Download full manual at youfixthis.com

www.manuallook.com

5. Install the shifter shaft (1) in the housing from the top and through the shift arm (3), Figure 122.

6. Install the double roll pin and wire together with a new safety wire.

7. Install the plug (5) in the case.

8. Install the interlock (balk) pin (9), Figure 121.

9. Position the 2nd-Rev fork in the case.

10. Install the 2nd-Rev shift rail in the housing through the fork and install the roll pin.

11. Install the upper detent ball, spring and pin as shown, Figure 121.

COUNTERSHAFT — ASSEMBLY — SINGLE TRANSMISSION

Reference — Figure 128

1. Install the countershaft, gears and bearings as shown, Figure 128.

   NOTE: *When equipped with the double clutch, first install the input shaft in reverse order as described in steps 1 through 7, "Countershaft Removal," Figure 119.*

INPUT SHAFT — ASSEMBLY

Reference — Figures 117 and 118

1. If removed, install the rear snap ring (11) and rear bearing (10), Figure 118.

2. Position the fixed gears and collars in place.

   NOTE: *If new input shaft components parts are used, or if the collar (8) has been upset install a new collar assembly at time of assembly.*

   When a new collar is used, assemble the collar to provide free play on the shaft during assembly. Make final adjustment only after installation of the front retainer assembly.

3. Install the input shaft from the front through the gears and collars.

4. Install the front bearings (3), Figure 118.

5. Install a new seal (2) in the retainer, Figure 117.

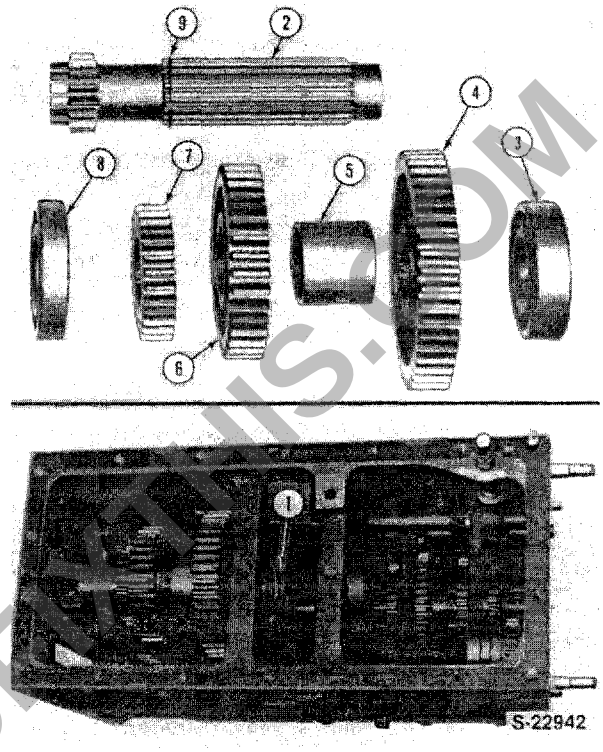

Figure 128
Countershaft Assembly

1. Snap Ring
2. Countershaft
3. Bearing
4. Fixed Gear (4th Range)
5. Spacer
6. Fixed Gear (3rd Range)
7. Fixed Gear (2nd Range)
8. Bearing
9. Snap Ring

6. Using a new gasket, install the retainer and tighten the bolts to the specified torque.

   NOTE: *Use new sealing washers on the retainer mounting bolts.*

COLLAR ADJUSTMENT

Reference — Figure 129

1. Adjust the length of the collar by hand to zero free play of the gears on the shaft. The collar should not be binding nor should it have free play. With proper adjustment, the collar should rotate with medium hand pressure.

2. After adjustment, stake the nut flange into the groove to lock the assembly.

   Never reuse a collar assembly if the staking has been upset.

PREVIEW - YOUFIXTHIS.COM

Download full manual at youfixthis.com

www.manuallook.com

5. Remove the sliding gear (2) from the drive pinion shaft.

SHIFT RAIL AND FORK REMOVAL
Reference — Figure 175

1. Remove the detent retaining bolt and remove the detent spring and ball (11 and 12).
2. Drive the roll pin out of the shift lever (10) and remove the lever.
3. Drive the roll pins out of the shift fork (3) and shifter boss (6).
4. Slide the shift rail forward and remove the fork and boss from the housing.
5. Remove the shift arm retaining plate (9) and remove the shift arm (7) from the housing.

INSPECTION

1. Clean all components in a suitable solvent and air dry.
2. Inspect the gears for excess wear or damage.
3. Check the bearings for excess wear or damage by slowly rotating the bearings by hand.
4. Inspect the shift rail for worn detent gears.
5. Inspect the detent ball and spring for excess wear or damage.
6. Inspect the shift fork for excess wear or the pads for bent fingers.

ASSEMBLY
Reference — Figure 175

Assembly of the creeper gear components generally follows the disassembly procedure in reverse order.

1. Install the sliding gear (2) onto the pinion shaft.
2. If removed, install the rear bearing (17) and snap ring (18).
3. Position the idler gear (14) and snap ring (15) and insert the countershaft through the idler gear and snap ring from the front.
4. Secure the idler gear with snap ring.
5. Install the top cover of the rear axle center housing.
6. Install the PTO coupler (22) with inner bearing from the front into the PTO countershaft.
7. Install the shift arm from inside using a new O-ring and install the shift arm retaining plate (9).
8. Position the fork and boss in place.
9. Install the shift rail through the fork and boss from the front and drive the roll pin into the fork and boss.
10. Install the shift lever and drive the roll pin into the shift lever.
11. Install the detent ball, spring and retaining bolt.
12. Complete the assembly of the tractor. See "Separating the Tractor," Part 12.

PREVIEW - YOUFIXTHIS.COM

Download full manual at youfixthis.com

www.manuallook.com

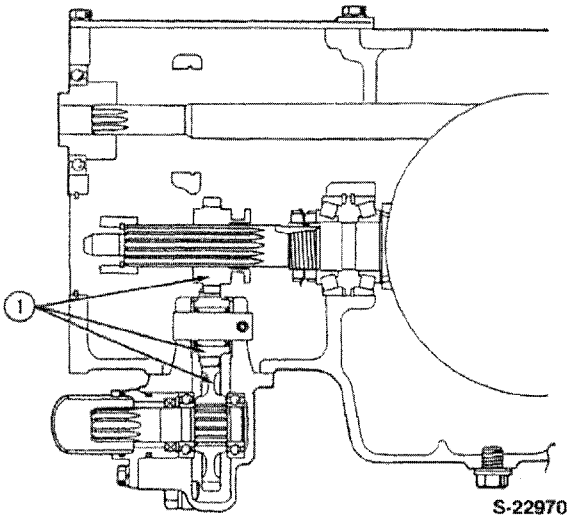

Figure 3
Front Wheel Drive Gears
1. FWD Gears

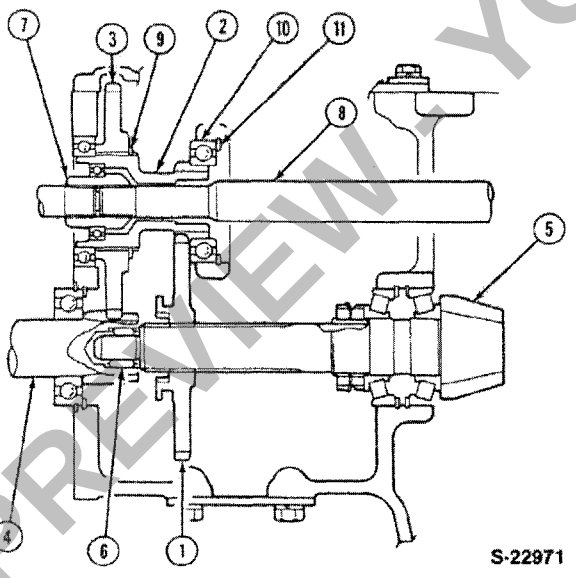

Figure 4
Creeper Gear (Option) Model 1720
1. Sliding Gear
2. Counter Gear
3. Idler Gear
4. Rear Main Shaft
5. Pinion Shaft
6. Needle Bearing
7. Coupler
8. PTO Countershaft
9. Snap Ring
10. Bearing
11. Snap Ring

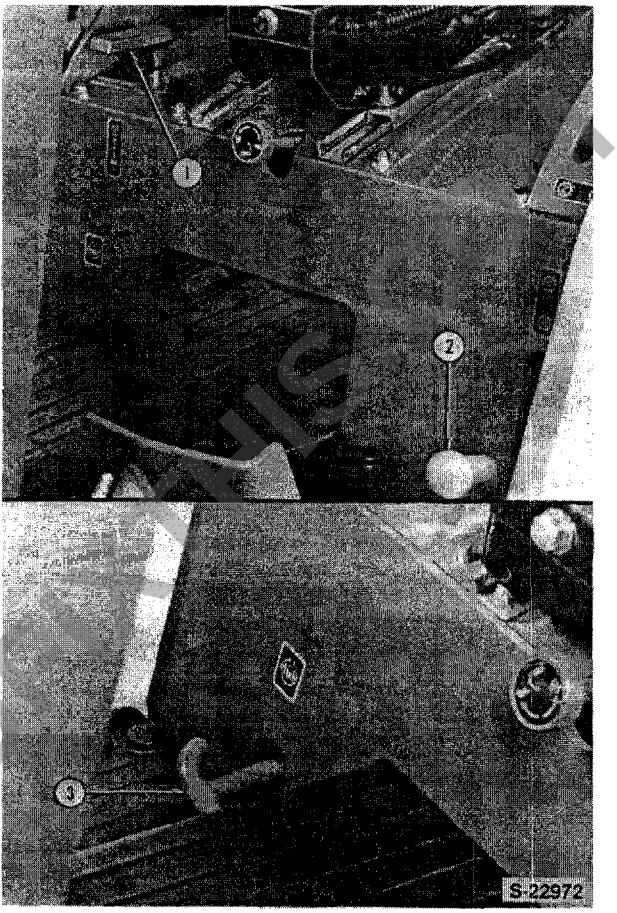

Figure 5
FWD, Creeper Gear and Differential Lock Control Lever — Model 1720
1. FWD Control Lever
2. Creeper Gear Control Lever
3. Differential Lock Control Lever

REAR AXLE AND BRAKES

The rear axle is a double reduction type using the conventional ring gear and pinion for the primary reduction and a final drive pinion and gear for the secondary reduction.

The axle housing enclose the brake discs and stators, Figure 7. The rear axle and differential components are lubricated by the common oil reservoir.

Power is transmitted by the transmission to the differential drive pinion and ring gear. The ring gear is bolted to the differential case which contains the differential pinions and axle side gears, Figure 8.

PREVIEW - YOU

Download full manual at youfixthis.com

www.manuallook.com

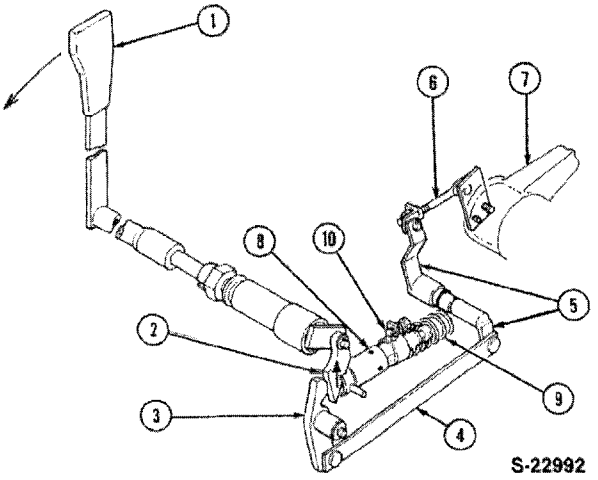

Figure 15
Position Control Operation — Neutral Position to Lowering

1. Position Control Lever
2. Position Control Lever — Cam
3. Feedback Link — Cam
4. Feedback Link (Internal)
5. Feedback Link (Int./Ext.)
6. Feedback Adjustment Rod
7. Lift Arm
8. Control Valve Spool
9. Valve Return Spring
10. Lowering Pin and Bolt

The rear lever (1), draft control, provides automatic implement depth control to maintan a constant draft on the tractor.

The system of automatic depth control (draft control) uses the top compression link to signal for raising or lowering the implement to maintain a constant draft.

When the control lever is moved to the full lowered position, the implement carried on the lift arms will float until a raise signal is received.

NOTE: *Position control operation (raise, netural and lowering condition) is same as single lever position control models.*

TOP LINK SENSING — RAISE
Reference — Figure 16

As soil conditions vary, an increase in implement draft will increase the force on the top link (8) and further compress the draft control main spring (7) to move the feedback linkage (3, 4, 5 and 6) in the direction of the arrows and push the control valve spool inward to a raise position. This action causes the implement to raise and as the implement is lifted, the force on the top link and main spring decreases and reduces the force on the feedback linkage and cam on the control valve spool. The control valve spring moves the control valve spool outward into the neutral position when the force on the top link and main spring is reduced to the original amount to maintain the original draft load on the tractor.

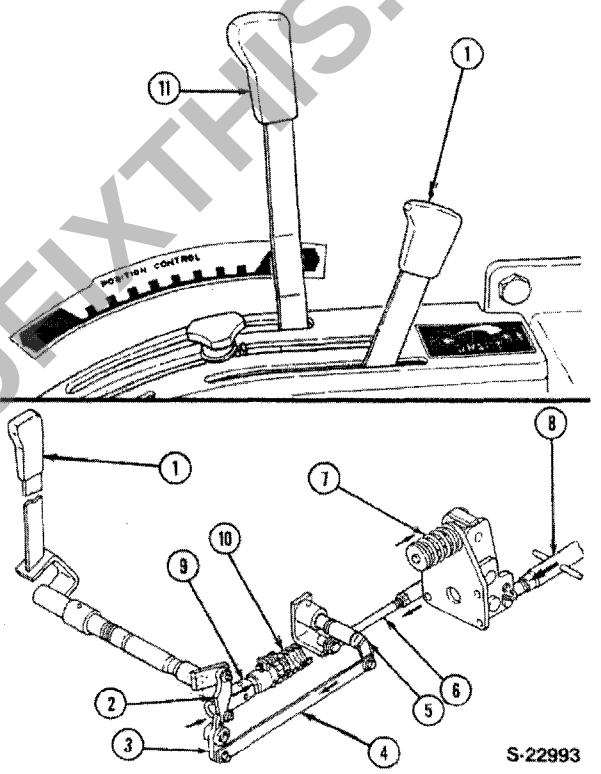

Figure 16
Draft Control Linkage Operation — Top Link Sensing to Raise

1. Draft Control Lever
2. Control Lever — Cam
3. Feedback Link — Cam
4. Feedback Link (Internal)
5. Feedback Arm
6. Adjustment Rod
7. Main Spring
8. Top Link
9. Control Valve Spool
10. Valve Spring
11. Position Control Lever

TOP LINK SENSING — LOWERING
Reference — Figure 17

As the soil conditions vary to decrease the draft load of the implement, the force on the top link (8) is reduced

PREVIEW - YOUFIXTHIS.COM

Download full manual at youfixthis.com

www.manuallook.com

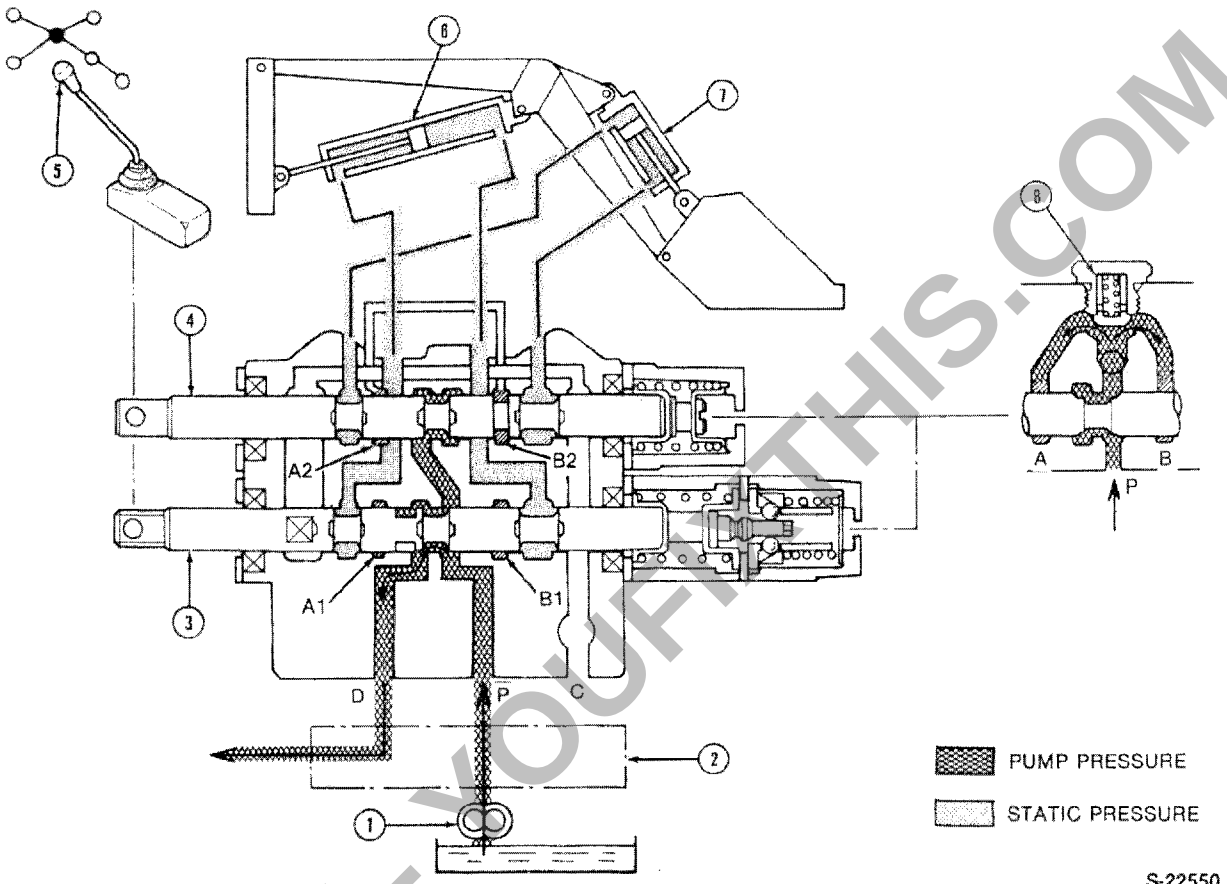

Figure 67
Oil Flow Bucket and Lift Cylinder — Neutral Position — Two Spool Valve

1. Oil Pump
2. System Relief — Diverter Manifold
3. Lift Control Valve Spool
4. Bucket Control Valve Spool
5. Control Lever
6. Lift Cylinder
7. Bucket Cylinder
8. Load Check Valve

A^1 Lift Cylinder Rod Port
B^1 Lift Cylinder Piston Port
A^2 Bucket Cylinder Piston Port
B^2 Bucket Cylinder Rod Port
P Pump Pressure Port
C Return-to-Sump Port
D Pump Pressure to Three-Point Hydraulic System

4. If required, remove the bolt (5) and separate the centering spring and seats from the spool.

INSPECTION

1. Inspect the spool and spool bore for pitting, scratches or excess wear. If inspection reveals defects, a new control valve assembly must be installed.
2. Check that the spool moves freely in the spool bore. If defective, replace the control valve assembly.

ASSEMBLY

Reassembly generally follows the dissasembly procedure in reverse.

PREVIEW - YOUFIXTHIS.COM

Download full manual at youfixthis.com

www.manuallook.com

CONDITION	POSSIBLE CAUSE	REMEDY
Steering wheel will not return to neutral or will turn by itself.	1. ORBITROL (1)Spool and sleeve combination is stuck and will not rotate. (2)ORBITROL not aligned to steering column.	Replace control valve assy. Re-align.
Cylinder will not follow steering wheel rotation or will respond sluggishly.	1. ORBITROL (1)ORBITROL has been improperly rebuilt, resulting in valve mistiming. 2. Steering cylinder (1)Air is trapped in the cylinder. (2)Internal oil leakage because of damaged piston seal.	Repair. Bleed air out. Replace the seal.
Steering wheel will "kick back."	1. ORBITROL (1)ORBITROL has been improperly rebuilt, resulting in valve mistiming. 2. Piping (1)Pipes are improperly connected to the four ports of ORBITROL.	Repair. Correct the pipe connections.
Oil leakage 1. From the splined connection of column to spool. 2. From mated face joints (valve body, spacer plate, ORBITROL, end cap).	Leaky oil seal (1)Dirty hydraulic oil. Damaged "O" ring (1)A pinched or damaged "O" ring in a mated face joint can be the cause, which resulted from lack of attention in reassembling the ORBITROL.	Replace oil seal. Change the oil. Replace.

B. PRESSURE TESTING

PUMP, STEERING MOTOR, RELIEF VALVE

To check the operator of the pump and relief valve, use the following procedure:

1. With the tractor engine stopped, disconnect one of the hydraulic lines which run to the steering cylinder.

2. Connect the pressure gauge to the end of the line from the steering motor and cap the line leading to the steering cylinder Figure 35.

3. Install the male end cap into the open end of the tee.

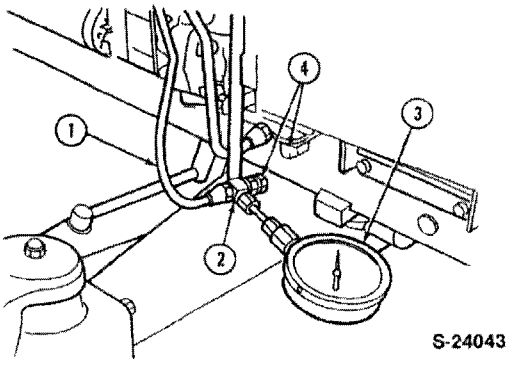

Figure 35
Pressure Testing Pump and Relief Valve

1. Steering Motor to Steering Cylinder Line
2. "Tee" Fitting #11451
3. 0-3000 psi Pressure Gauge
4. Caps

PREVIEW - YOUFIXTHIS.COM

Download full manual at youfixthis.com

www.manuallook.com

GENERAL

BOLT TORQUE SPECIFICATIONS

Bolt Size	Grade No.	Coarse Thread			Fine Thread		
		Pitch (mm)	Pounds-Feet	Newton-Meters	Pitch (mm)	Pounds-Feet	Newton-Meters
M6	4T	1.0	3.6-5.1	4.9-6.9	–	–	–
	7T		6.1-8.3	8.3-11.3			
	10T		8.7-11.6	11.8-15.7			
M8	4T	1.25	9.4-12.3	12.7-16.7	1.0	11.2-14.8	15.2-20.1
	7T		16.6-21.0	22.6-28.4		19.5-25.3	26.5-34.3
	10T		21.0-26.8	28.4-36.3		22.4-29.7	30.4-40.2
M10	4T	1.5	18.8-24.6	25.5-33.3	1.25	21.0-26.8	28.4-36.3
	7T		32.5-41.2	44.1-55.9		36.2-46.3	49.0-62.8
	10T		39.8-51.4	53.9-69.9		42.7-54.2	57.9-73.5
M12	4T	1.75	27.5-34.7	37.3-47.1	1.25	31.8-40.5	43.1-54.9
	7T		48.5-61.5	65.7-83.4		55.0-69.4	74.5-94.1
	10T		68.0-85.4	92.9-116		73.1-93.3	99.0-127
M14	4T	2.0	46.3-59.3	62.8-80.4	1.5	51.4-64.4	69.6-87.3
	7T		76.7-96.9	104-131		86.1-109	117-148
	11T		102-129	139-175		108-137	147-186
M16	4T	2.0	63.6-81.0	86.3-110	1.5	67.3-84.6	91.3-115
	7T		110-136	149-184		116-142	157-192
	11T		152-188	206-255		163-199	221-270
M18	4T	2.0	83.9-104	114-141	1.5	95.9-120	313-163
	7T		145-174	196-235		170-206	131-279
	11T		203-246	275-333		221-271	299-368
M20	4T	2.5	106-132	144-179	1.5	127-156	172-211
	7T		177-213	240-289		203-246	275-333
	11T		268-325	363-441		293-358	397-485

PREVIEW - YOUFIXTHIS.COM

Download full manual at youfixthis.com

www.manuallook.com

PART 12
SEPARATING THE TRACTOR

Chapter 2
SPECIFICATIONS

Section		Page
A.	SPECIFICATIONS	15

PREVIEW - YOUFIXTHIS.COM

A. SPECIFICATIONS

Lubricant

Transmission, Rear Axle and Hydraulic System — Oil ..... Ford 134

Front Axle ..... Ford 134

Ford Sealant (Gasket Eliminator) ..... Ford FP-119

METRIC BOLT TORQUE SPECIFICATIONS

Bolt Size	Grade No.	Coarse Thread			Fine Thread		
		Pitch (mm)	Pounds-Feet	Newton-Meters	Pitch (mm)	Pounds-Feet	Newton-Meters
M6	4T 4T 4.8	1.0	3.6-5.1	4.9-6.9	–	–	–
	7T 7T 8T 8.8		6.1-8.3	8.3-11.3			
	10T 10T 11T		8.7-11.6	11.8-15.7			
M8	4T	1.25	9.4-12.3	12.7-16.7	1.0	11.2-14.8	15.2-20.1
	7T		16.6-21.0	22.6-28.4		19.5-25.3	26.5-34.3
	10T		21.0-26.8	28.4-36.3		22.4-29.7	30.4-40.2
M10	4T	1.5	18.8-24.6	25.5-33.3	1.25	21.0-26.8	28.4-36.3
	7T		32.5-41.2	44.1-55.9		36.2-46.3	49.0-62.8
	10T		39.8-51.4	53.9-69.9		42.7-54.2	57.9-73.5
M12	4T	1.75	27.5-34.7	37.3-47.1	1.25	31.8-40.5	43.1-54.9
	7T		48.5-61.5	65.7-83.4		55.0-69.4	74.5-94.1
	10T		68.0-85.4	92.9-116		73.1-93.3	99.0-127
M14	4T	2.0	46.3-59.3	62.8-80.4	1.5	51.4-64.4	69.6-87.3
	7T		76.7-96.9	104-131		86.1-109	117-148
	11T		102-129	139-175		108-137	147-186
M16	4T	2.0	63.6-81.0	86.3-110	1.5	67.3-84.6	91.3-115
	7T		110-136	149-184		116-142	157-192
	11T		152-188	206-255		163-199	221-270
M18	4T	2.0	83.9-104	114-141	1.5	95.9-120	313-163
	7T		145-174	196-235		170-206	131-279
	11T		203-246	275-333		221-271	299-368
M20	4T	2.5	106-132	144-179	1.5	127-156	172-211
	7T		177-213	240-289		203-246	275-333
	11T		268-325	363-441		293-358	397-485

Download full manual at youfixthis.com

www.manuallook.com

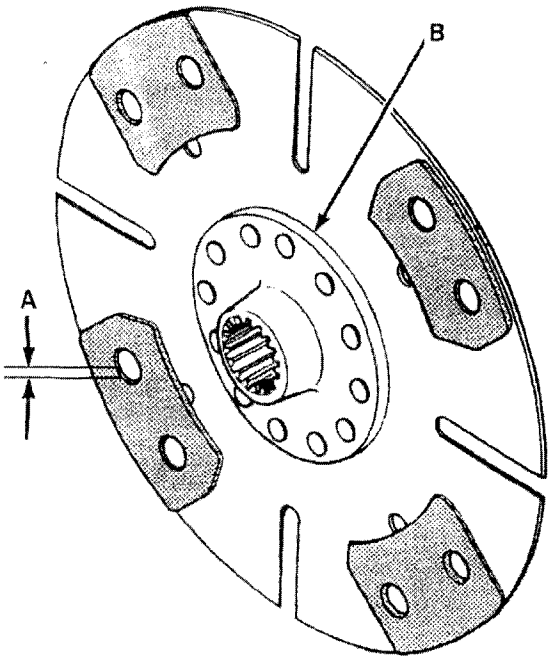

Clutch Disc Assembly **Figure 4-5**

A Disc wear limit 0.12 in. (3 mm)
B Clutch hub

Refer to Figure 4-5

4. Inspect the clutch disc lining for excess wear. Replace the clutch disc if the lining is worn to less than 0.012 in. (0.3 mm) from the top of the rivet head.

5. Inspect the clutch lining for indications of overheating, scoring, or oil impregnation in the lining.

6. Inspect the hub spline, B, for excess wear.

If any damage to the disc is apparent, replace the clutch disc assembly.

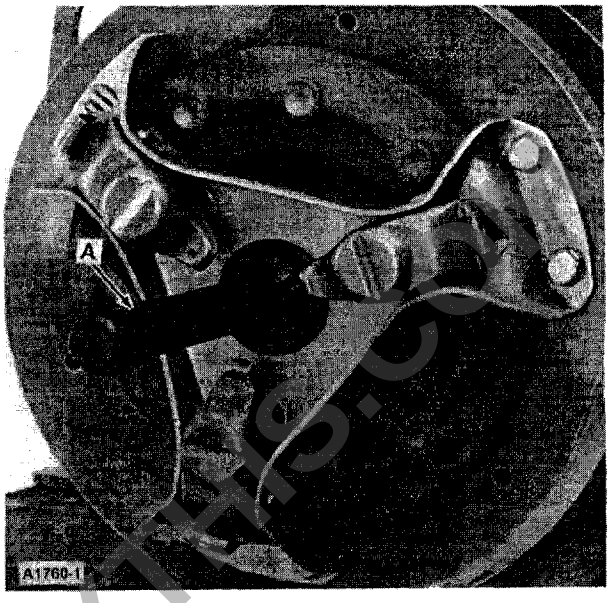

Clutch Installation **Figure 4-6**

A Alignment arbor FNH 00091

INSTALLATION

Refer to Figure 4-6

IMPORTANT: When installing a new pressure plate assembly, the pressure plate friction surface must be wiped clean with a suitable solvent to remove the protective film.

1. Lightly lubricate the hub splines of the transmission input shaft using a high temperature lubricant.

2. Using the Clutch Alignment Arbor Tool No. FNH 00091, A, position the clutch disc on the engine flywheel.

3. Position the clutch pressure plate on the flywheel and install the six attaching bolts.

   NOTE: Tighten the attaching bolts evenly to 16-21 lbs.-ft. (23-28 N·m).

PREVIEW - YOUFIXTHIS.COM

Download full manual at youfixthis.com

www.manuallook.com

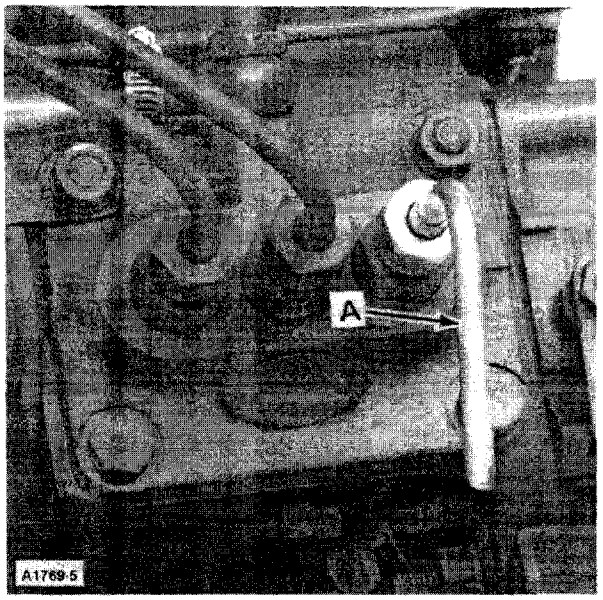

Spill Tube **Figure 2-12**
A. Spill tube

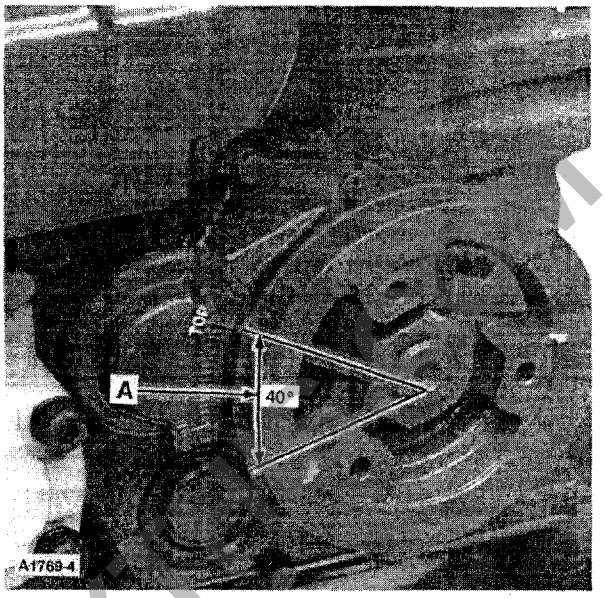

Crankshaft Rotated **Figure 2-13**
A. 40°

12. Fabricate a spill tube, A, Figure 2-12, from a discarded injection line and install the tube on the No. 1 port on the injection pump.
13. Move the throttle to the wide open position.
14. Rotate the crankshaft counterclockwise (viewed from the front of the engine) approximately 40 degrees, Figure 2-13.
15. Turn on the fuel supply to the injection pump. Fuel, A, Figure 2-14, should flow out of spill tube, B, on the No. 1 cylinder port.

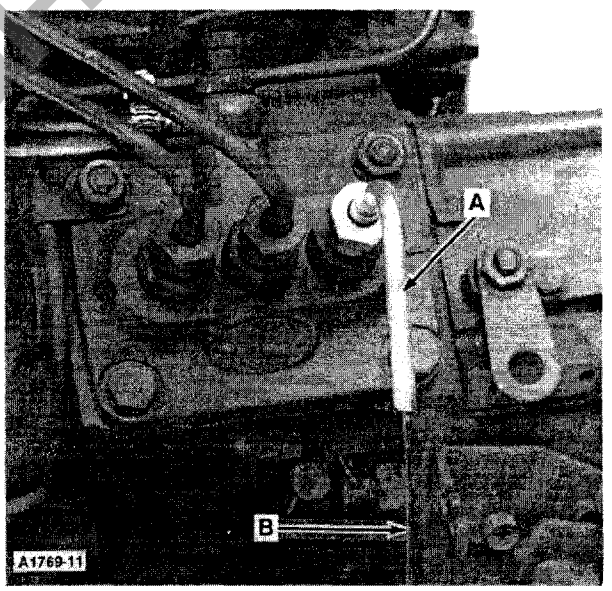

Fuel Flow **Figure 2-14**
A. Fuel flow
B. Spill tube

PREVIEW. YOUFIX

Download full manual at youfixthis.com

www.manuallook.com

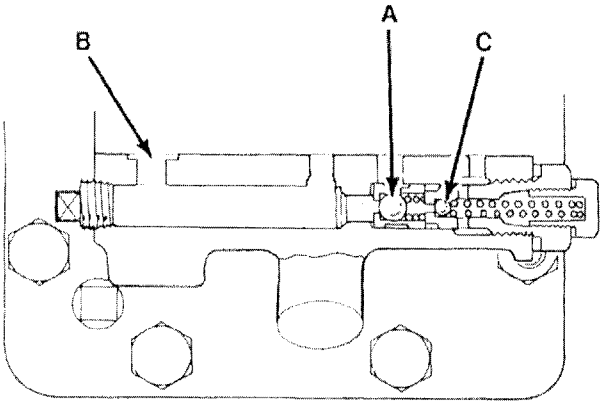

High Pressure Safety Valve **Figure 8-7**

A Check ball
B Inlet passage
C Safety valve

High Pressure Safety Valve
Refer to Figure 8-7

The high pressure safety valve, C, is located in the cylinder head and protects the lift cylinder against shock loads. When the cylinder pressure exceeds 3625 ± 290 psi (250 ± 20 bar), the safety valve opens and allows the cylinder oil to escape to sump.

LINKAGE OPERATIONS
Refer to Figure 8-8

The single lever hydraulic system, consists of the single quadrant control lever, A, connected by internal linkage to the control valve spool and, when moved, determine a raise, lower, or neutral condition for the hydraulic system.

The single lever control is used to maintain mounted implements at a constant height relative to the tractor. The lift arms respond to the movement of the control lever, A. The rod connected to the lift arm, actuates the feedback links to move the control valve spool to the neutral position when the desired height is achieved.

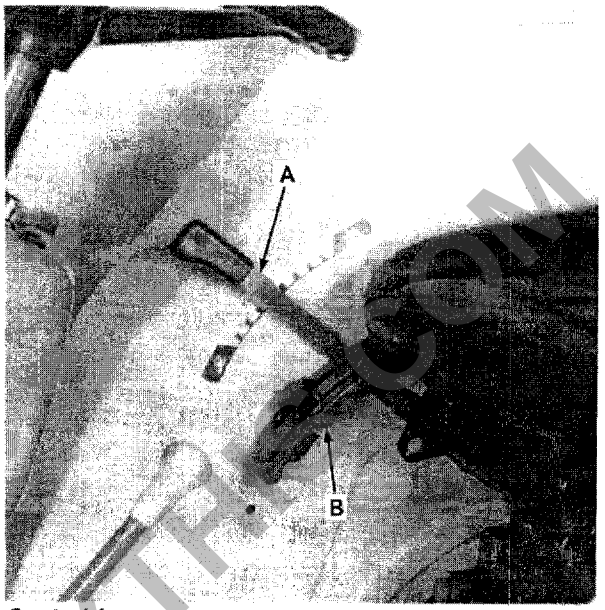

Control Lever **Figure 8-8**

A Lever
B Guide

LIFT CYLINDER ASSEMBLY — REMOVAL

1. Before removing the lift cover assembly, discharge the oil from the lift cylinder by lowering the lift links to their lowest position.
2. Disconnect the wiring harness at the fenders.
3. Remove the hydraulic control lever grip, Figure 8-8.
4. Remove the lever guide, B, from the right fender.

PREVIEW - YOUFIXTHIS.COM

Download full manual at youfixthis.com

PREVIEW ONLY

You're viewing 25 of 519 pages

The full manual includes:

- All 519 pages, complete
- Searchable PDF (find any keyword)
- No watermarks
- Instant download
- Print-ready quality

GET FULL MANUAL NOW

Ford 1320, 1520, 1720 Repair Manual

Scan or click anywhere
youfixthis.com

Click anywhere on this page to get the full manual