Models 1510 and 1710 only:

- Loosen the clamp and disconnect the air cleaner inlet hose from the engine, Figure 130.
- Remove the bolts attaching the radiator support to the frame rails and remove the radiator, radiator support and air cleaner assembly as a unit, Figure 131.

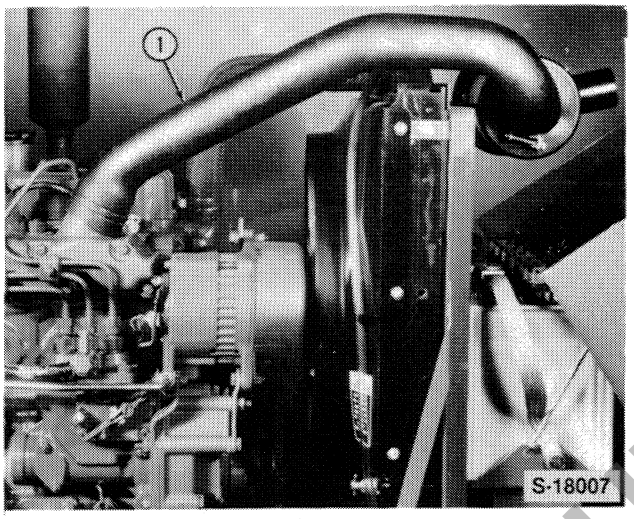

Figure 130
Radiator Removal — Models 1510-1710
1. Air Cleaner Inlet Hose

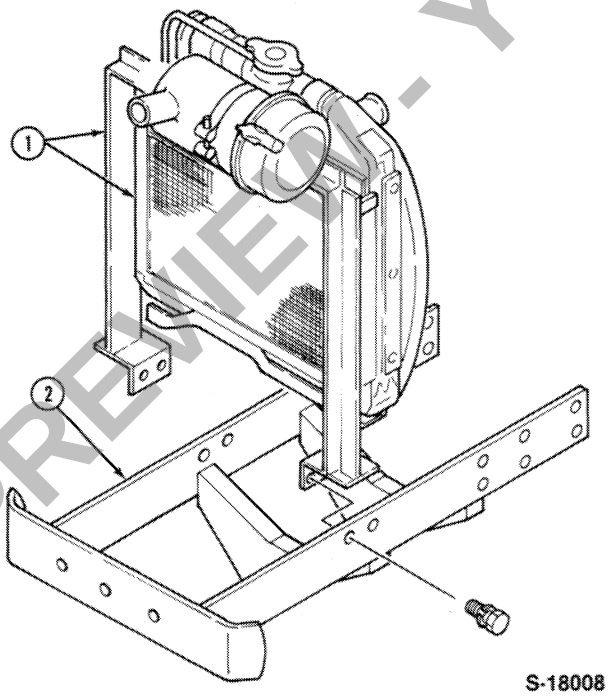

Figure 131
Radiator Removal — Models 1510-1710
1. Radiator and Support Assembly
2. Frame Side Rails

- Separate the radiator from the radiator support, Figure 132.

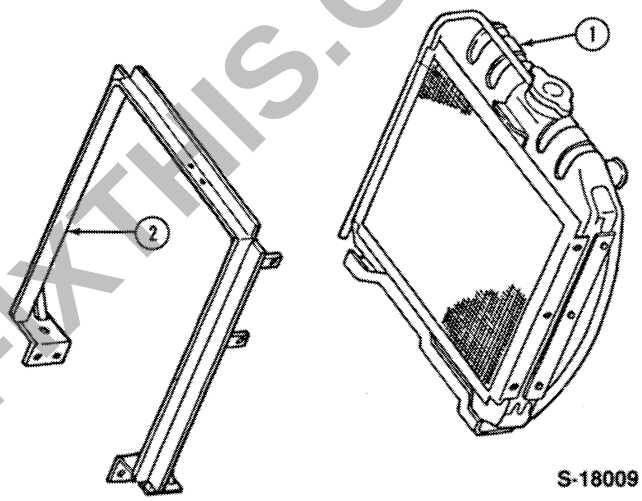

Figure 132
Radiator Removal — Models 1510-1710
1. Radiator Assembly
2. Radiator Support

INSPECTION AND REPAIR

1. Inspect the radiator fins and be sure they are free from obstruction.
2. Check the radiator for signs of coolant leakage and repair as required.

INSTALLATION

Installation of the radiator generally follows the removal procedure in reverse.

On installation, observe the following requirements.

Refill the radiator with the correct grade and quantity of antifreeze.

Run the engine for several minutes and check the hose connections for leaks.

PREVIEW - YOUFIXTHIS.COM
Download full manual at youfixthis.com

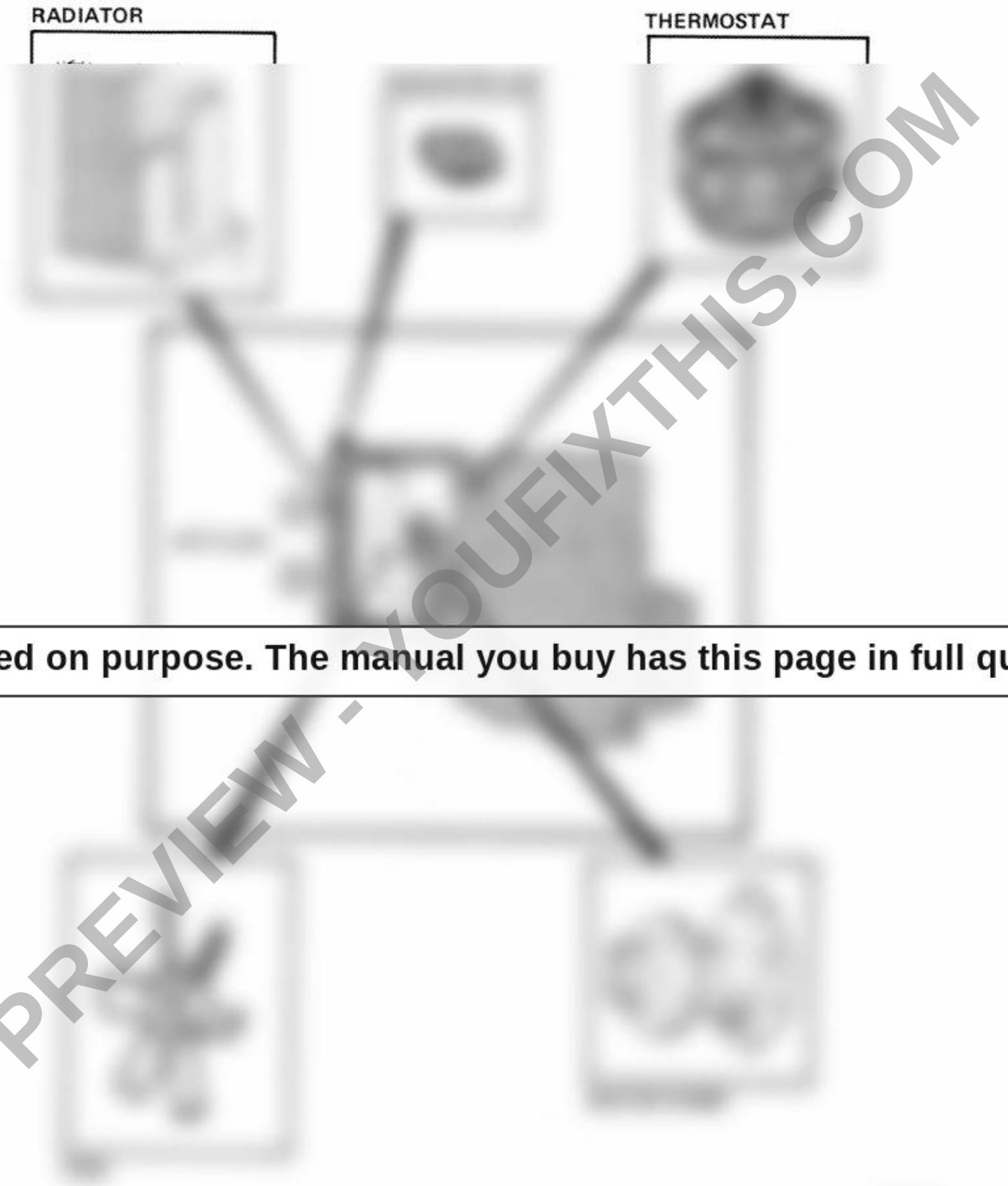

Blurred on purpose. The manual you buy has this page in full quality.

PREVIEW - YOUFIXTHIS.COM

Download full manual at youfixthis.com

B. SPECIFICATIONS (Continued)

GENERAL BOLT TORQUE SPECIFICATION

BOLT SIZE	BOLT HEAD IDENTIFICATION MARKS AS PER GRADE	COARSE THREAD				FINE THREAD			
		PITCH (mm)	TORQUE kgf.m	TORQUE Lbs.-Ft.	TORQUE Nm	PITCH (mm)	TORQUE kgf.m	TORQUE Lbs.-Ft.	TORQUE Nm

Blurred on purpose. The manual you buy has this page in full quality.

PREVIEW - YOUFIXTHIS.COM

Download full manual at youfixthis.com

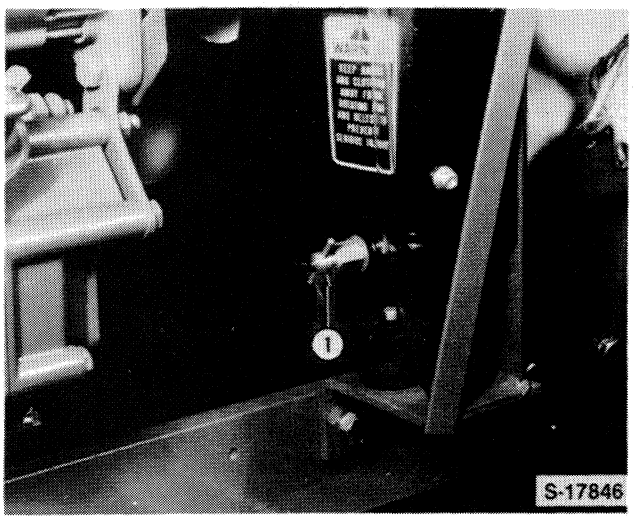

Figure 1
Radiator Drain — Models 1510-1710
1. Drain Cock

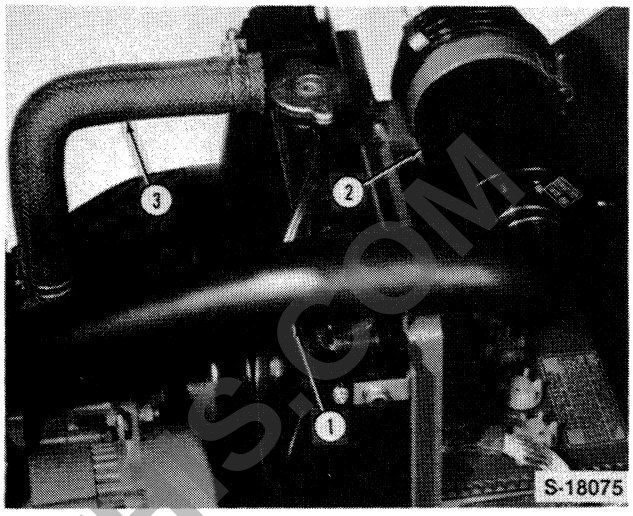

Figure 3
Air Cleaner Removal — Models 1510-1710
1. Air Cleaner Outlet Hose
2. Air Cleaner Assembly
3. Upper Radiator Hose

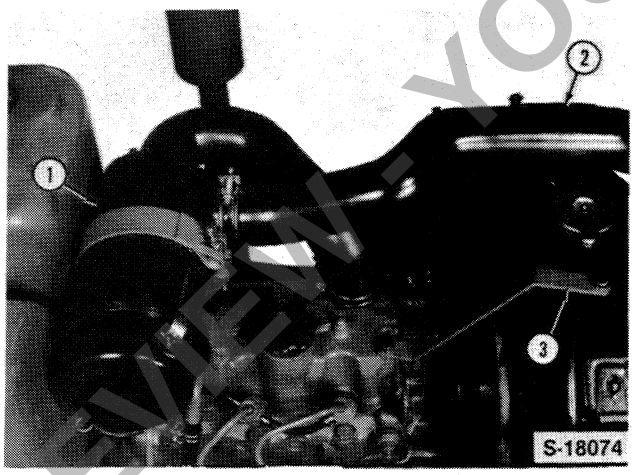

Figure 2
Air Cleaner — Model 1310
1. Air Cleaner Assembly
2. Air Inlet Tube
3. Radiator Support Brace

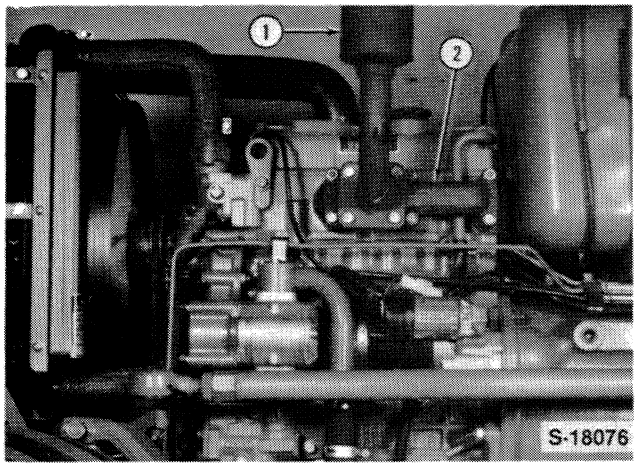

Figure 4
Exhaust Manifold Removal — Models 1510-1710
1. Muffler Assembly
2. Exhaust Manifold

4. Remove the exhaust muffler and manifold assembly, Figure 4.

5. **Model 1310 only:** Remove the radiator top support brace from the cylinder head, Figure 2.

   NOTE: *Glow plugs must be removed before removing injection pre-chamber.*

6. Remove the injection lines and cap all openings, Figure 5.

7. Remove the injector assemblies, Figure 5.

   NOTE: *Be sure to remove the injector sealing washer and cup type shield from the injector bore, Figure 6.*

PREVIEW - YOUFIXTHIS.COM
Download full manual at youfixthis.com

PART 1
ENGINE SYSTEMS — MODELS 1310-1510-1710

Chapter 3
TROUBLE SHOOTING, SPECIFICATIONS AND SPECIAL TOOLS

Section		Page
A.	TROUBLE SHOOTING	67
B.	SPECIFICATIONS	71
C.	SPECIAL TOOLS	80

PREVIEW - YOUFIXTHIS.COM

A. TROUBLE SHOOTING

ENGINE

CONDITION	POSSIBLE CAUSES
Engine Does Not Develop Full Power	1. Clogged air cleaner. 2. Fuel line obstructed. 3. Improper injection timing. 4. Improper nozzle injection pressure and angle. 5. Low cylinder compression. 6. Insufficient fuel injection. 7. Improper valve lash adjustment. 8. Burned, worn or sticking valves. 9. Blown head gasket. 10. Worn or sticking piston ring.
Low Cylinder Compression	1. Burned, worn, or sticking valves. 2. Bent valve stem. 3. Broken or weak valve spring. 4. Blown cylinder head gasket. 5. Worn or sticking piston ring. 6. Scored piston.
Poor Engine Idling	1. Improper injection timing. 2. Air in injection pump. 3. Improper governor adjustment.

Download full manual at youfixthis.com

B. SPECIFICATIONS

GENERAL SPECIFICATIONS

Blurred on purpose. The manual you buy has this page in full quality.

PREVIEW - YOUFIXTHIS.COM

Download full manual at youfixthis.com

SAFETY PRECAUTIONS

Practically all Service work involves the need to drive the tractor. The Operator's Manual, supplied with each tractor, contains detailed safety precautions relating to Driving, Operating and Servicing that tractor. These precautions are as applicable to the service technician as they are to the operator, and should be read, understood and practiced by all personnel.

Prior to undertaking any maintenance, repair, overhaul, dismantling or re-assembly operations, whether within a workshop facility or out "in the field", consideration should be given to factors that may have an effect upon Safety, not only upon the mechanic carrying out the work, but also upon bystanders.

PERSONAL CONSIDERATIONS

- The wrong clothes or carelessness in dress can cause accidents. Check to see that you are suitably clothed.
- Some jobs require special protective equipment.
- **Skin Protection**
  Used motor oil may cause skin cancer. Follow work practices that minimize the amount of skin exposed and length of time used oil stays on skin.
- **Eye Protection**
  The smallest eye injury may cause loss of vision. Injury can be avoided by wearing eye protection when engaged in chiselling, grinding, discing, welding, painting, etc.
- **Breathing Protection**
  Fumes, dust and paint spray are unpleasant and harmful. These can be avoided by wearing respiratory protection.
- **Hearing Protection**
  Loud noise may damage your hearing and the greater the exposure the worse the damage. If the noise is excessive, wear ear protection.
- Avoid injury by correctly handling components. Make sure you are capable of lifting the object. If in doubt get help.
- **Hand Protection**
  It is advisable to use a protective cream before work to prevent irritation and skin contamination. After work clean your hands with soap and water. Solvents such as white spirit, paraffin, etc., may harm the skin.
- **Foot Protection**
  Substantial or protective footwear with reinforced toe-caps will protect your feet from falling objects. Additionally, oil-resistant soles will help to avoid slipping.
- **Special Clothing**
  For certain work it may be necessary to wear flame or acid-resistant clothing.
- Avoid injury through incorrect handling of components. Make sure you are capable of lifting the object. If in doubt get help.

EQUIPMENT CONSIDERATIONS

- **Machine Guards**
  Before using any machine, check to ensure that the machine guards are in position and serviceable. These guards not only prevent parts of the body or clothing coming in contact with the moving parts of the machine, but also ward off objects that might fly off the machine and cause injury.
- **Lifting Appliances**
  Always ensure that lifting equipment, such as chains, slings, lifting brackets, hooks and eyes are thoroughly checked before use. If in doubt, select stronger equipment than is necessary.

  Never stand under a suspended load or raised implement.
- **Compressed Air**
  The pressure from a compressed air line is often as high as 100 psi (6.9 bar) 7 (kgf/cm²). It is perfectly safe if used correctly. Any misuse may cause injury.

PREVIEW - YOUFIXTHIS.COM

Download full manual at youfixthis.com

HYDRAULIC PUMP DRIVE GEAR

1. Remove the hydraulic pump drive gear, shaft, and bearings, Figure 46.

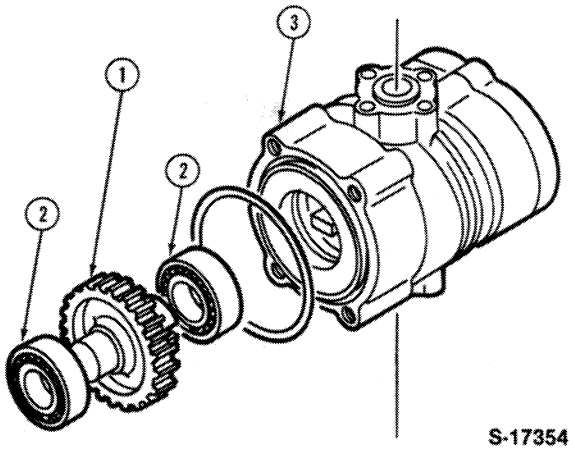

Figure 46
Hydraulic Pump Drive Gear Removal — Model 1310

1. Drive Gear and Shaft Assembly
2. Bearings
3. Hydraulic Pump

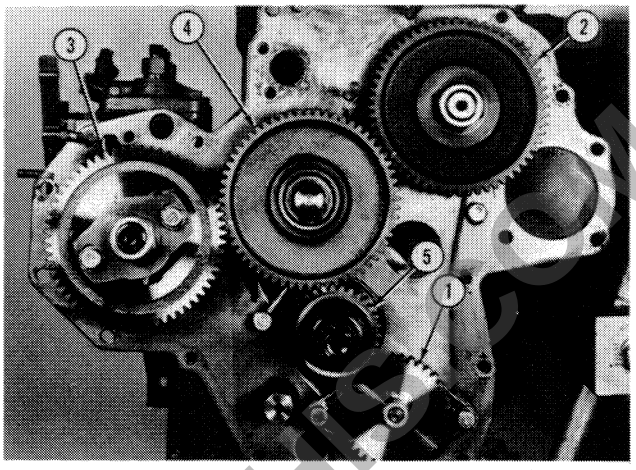

Figure 47
Timing Gears and Oil Pump Removal — Models 1510-1710 (Model 1510 Shown)

1. Oil Pump Drive Gear
2. Camshaft Gear
3. Injection Pump Drive Gear
4. Idler Gear
5. Crankshaft Gear

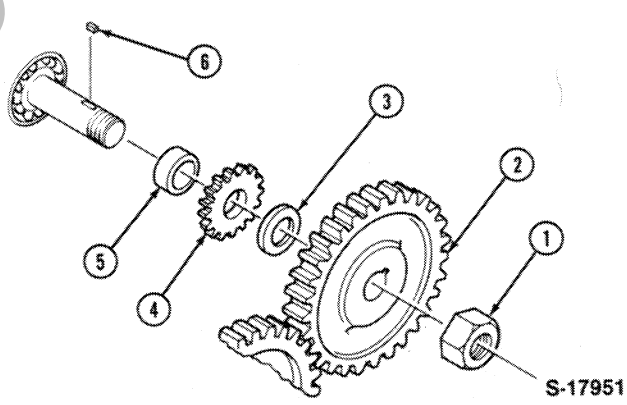

Figure 48
Camshaft Gear Removal — Models 1510-1710

1. Nut
2. Camshaft Gear
3. Spacer
4. Tachometer Gear
5. Collar
6. Key

TIMING GEARS AND OIL PUMP — REMOVAL

Models 1510 and 1710:

1. Remove the oil pump drive gear, Figure 47.

2. Remove the camshaft gear, spacer, tachometer drive gear, tachometer drive shaft, collar and key, Figure 48.

3. Remove the injection pump gear and coupler retaining nut, Figure 47 (1510), and Figure 49 (1710), and remove the drive gear and coupler assembly as a unit.

4. Remove the idler gear snap ring and remove the gear and spacer collar, Figures 47 and 49.

OIL PUMP REMOVAL

Models 1510 and 1710 only:

1. Remove the oil pump drive gear, Figure 50.

2. Remove the oil pump mounting bolts and withdraw the oil pump from the engine block, Figure 50.

PREVIEW - YOUFIXTHIS.COM
Download full manual at youfixthis.com

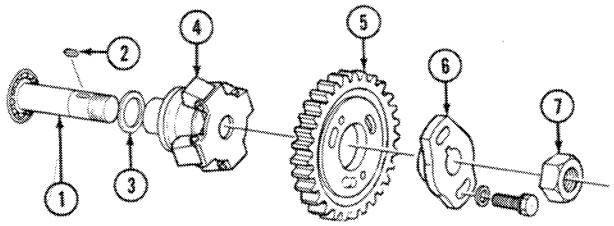

S-17998

Figure 121
Governor and Injector Pump Gear Installation — Model 1510

1. Camshaft
2. Coupling Key
3. Shim
4. Flyweight Assembly
5. Injection Pump Gear
6. Coupling
7. Retaining Nut

On Model 1710 only:

1. If removed, install the injection pump coupling, key and retaining nut.

2. Install the injection pump gear and retaining bolts, Figure 123.

NOTE: *Match the injection pump gear and idler gear timing marks. Also, match the pump gear and coupling timing marks, Figure 124.*

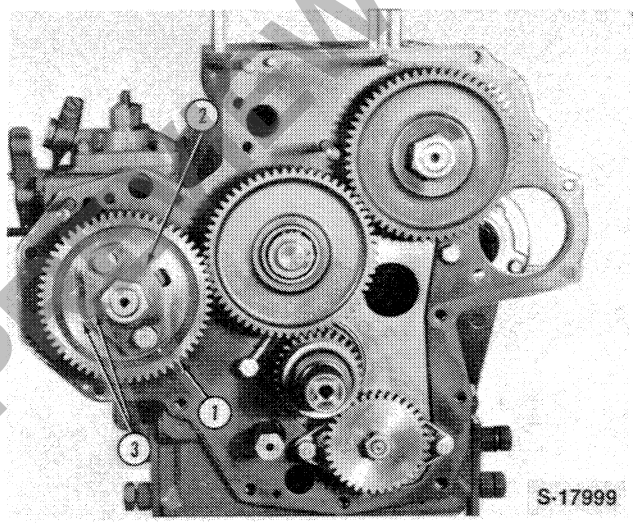

S-17999

Figure 122
Injection Pump Gear and Coupling Timing Marks — Model 1510

1. Injection Pump Gear
2. Coupling
3. Timing Marks

INJECTION PUMP TIMING

See Part 2 for injection pump timing procedures.

1. Tighten all bolts to the correct torque. See "Specifications," Chapter 3.

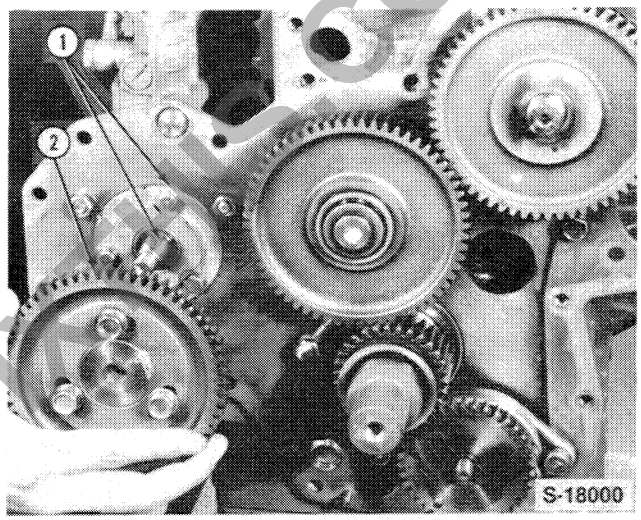

S-18000

Figure 123
Injection Pump Gear and Coupling Installation — Model 1710

1. Coupling and Key
2. Gear

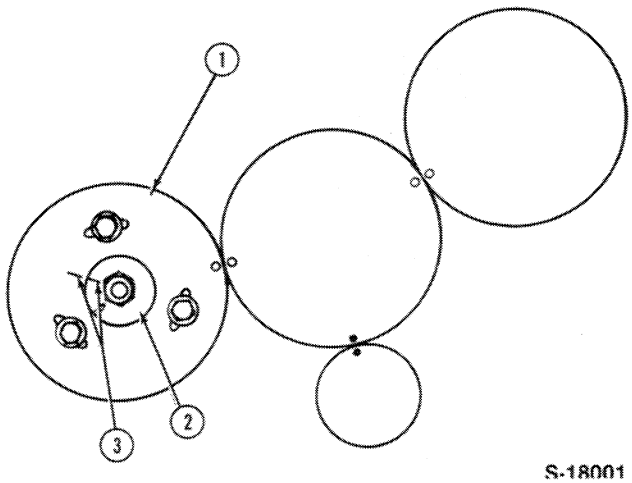

S-18001

Figure 124
Injection Pump Gear and Coupling Timing Marks — Model 1710

1. Gear
2. Coupling
3. Timing Marks

Download full manual at youfixthis.com

B. SPECIFICATIONS (Continued)

CAMSHAFT

	1310	1510	1710
Cam Height-Valve			
Standard	1.041-1.043 in. (26.445-26.5 mm)	1.418-1.42 in. (36.017-36.072 mm)	1.418-1.42 in. (36.017-36.072 mm)
Minimum	1.027 in. (26.1 mm)	1.397 in. (35.5 mm)	1.397 in. (35.5 mm)
Bend			
Standard	.001 in. (.03 mm)	.001 in. (.03 mm)	.001 in. (.03 mm)
Maximum	.004 in. (.1 mm)	.004 in. (.1 mm)	.004 in. (.1 mm)
Cam Height-Fuel			
Standard	1.335-1.341 in. (33.94-34.06 mm)	1.377-1.378 in. (34.98-35.02 mm)	Not Applicable
Minimum	1.33 in. (33.8 mm)	1.370 in. (34.80 mm)	Not Applicable

VALVES

	1310	1510	1710
Stem Diameter - Intake			
Standard	.2738-.2744 in. (6.955-6.97 mm)	.313-.314 in. (7.955-7.97 mm)	.313-.314 in. (7.955-7.97 mm)
Minimum	.271 in. (6.89 mm)	.310 in. (7.88 mm)	.310 in. (7.88 mm)
Stem Diameter - Exhaust			
Standard	.2736-.2740 in. (6.95-6.96 mm)	.313-.314 in. (7.95-7.96 mm)	.313-.314 in. (7.95-7.96 mm)
Minimum	.269 in. (6.84 mm)	.309 in. (7.85 mm)	.309 in. (7.85 mm)
Guide Clearance - Intake			
Standard	.001-.002 in. (.03-.06 mm)	.001-.002 in. (.03-.06 mm)	.001-.002 in. (.03-.06 mm)
Maximum	.008 in. (.2 mm)	.008 in. (.2 mm)	.008 in. (.2 mm)
Guide Clearance - Exhaust			
Standard	.002-.003 in. (.04-.065 mm)	.002-.003 in. (.04-.065 mm)	.002-.003 in. (.04-.065 mm)
Maximum	.010 in. (.25 mm)	.010 in. (.25 mm)	.010 in. (.25 mm)
Valve Margin			
Standard	.0364-.0423 in. (0.925-1.075 mm)	.056-.062 in. (1.425-1.575 mm)	.056-.062 in. (1.425-1.575 mm)
Maximum	.0197 in. (0.5 mm)	.004 in. (1.0 mm)	.004 in. (1.0 mm)
Valve Lash	0.008 in. (0.2 mm)	.012 in. (.3 mm)	.012 in. (.3 mm)

PREVIEW - YOUFIXTHIS.COM

Download full manual at youfixthis.com

PART 2
FUEL SYSTEM

Chapter 2
INJECTORS

Section		Page
A.	INJECTORS — DESCRIPTION AND OPERATION	23
B.	INJECTORS — REMOVAL AND INSTALLATION	24
C.	INJECTORS — OVERHAUL	25

A. INJECTORS — DESCRIPTION AND OPERATION

Pintle type injectors are used in all engine applications. The injectors have a .040 in. (1.01 mm) single orifice and are set to 1700 psi (120 kg/cm²) opening pressure. The pressure adjustment is made by adding or deleting shims from the top of the injector pressure adjusting spring. The pintle type injectors have an injection angle of 12°. The injection pipes are .080 in. (2 mm) I.D. and are the same length for each cylinder to help keep the injection intervals in time.

The engine injector function is to inject fuel into a pressurized cylinder in a fully atomized condition so as to burn efficiently with a minimum of smoke.

Each injector consists of a nozzle assembly and needle valve assembly, a nozzle holder assembly and injector needle valve regulating spring, Figure 49.

Fuel from the fuel injection pump enters the injector fuel inlet and passes down through a drilling in the nozzle holder and body to the needle valve seat.

The fuel, pressurized by the injection pump, lifts the needle valve off the seat against the action of a spring. The fuel is then forced, in an atomized state, through the .040 orifice in the nozzle tip, Figure 50. When the pressure from the injection pump drops, the needle valve snaps back onto the seat under pressure from the spring.

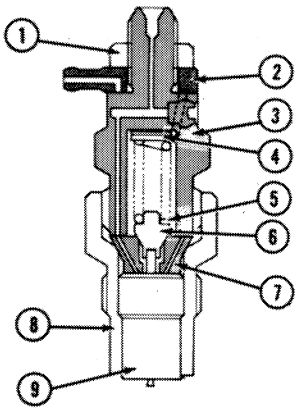

S-16690

Figure 49
Injector Assembly

1. Nut
2. Nipple Joint
3. Body
4. Shim
5. Spring
6. Push Rod
7. Distance Piece
8. Nozzle Nut
9. Nozzle Assembly

To provide lubrication of the injector, a small amount of fuel is permitted to leak up between the needle valve and the nozzle body. The excess fuel rises to the top of the injector and returns to the fuel tank via an injector leak-off line.

PREVIEW - YOUFIXTHIS.COM
Download full manual at youfixthis.com

PREVIEW - YOUFIXTHIS.COM

Download full manual at youfixthis.com

Test Results

Low resistance reading = Good.

High resistance reading = (1) Check switch to magnet clearance. (2) If clearance is correct, replace reed switch.

4. Shift the main shift lever to each of the four main gear positions (1-3 and 2-Rev.), and repeat the ohmmeter test for each position.

Test Results

High resistance reading = Good.

Low resistance reading = (1) Check cleanliness of magnets (clean). (2) If magnets are clean and functioning, replace the reed switch.

RELAY

REMOVAL

1. Disconnect the relay wiring, Figure 70.

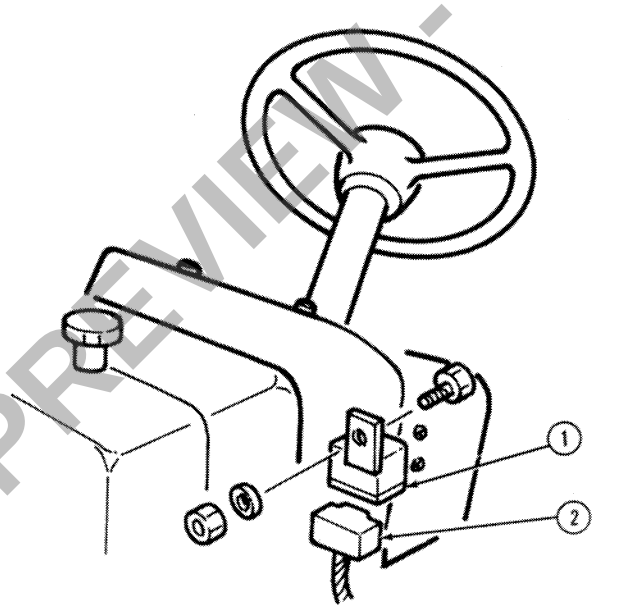

S-19005

Figure 70
Safety Switch Relay Removal
1. Relay
2. Wiring Connector

2. Remove the relay mounting bolt and remove the relay.

INSTALLATION

Installation follows the removal procedure in reverse.

TROUBLE SHOOTING

Check the relay contact switch as follows:

1. Using an ohmmeter, connect the ohmmeter leads to the relay terminals marked 1 and 2 and observe the ohmmeter reading, Figure 71.

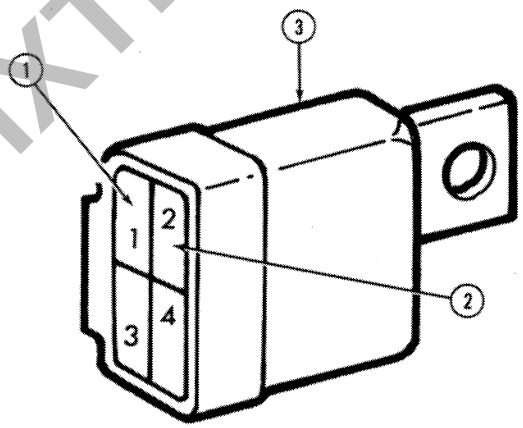

S-19006

Figure 71
Relay Contact Switch Check
1. To Starter Motor
2. From Key Switch (Terminal No. 50)
3. Relay Assembly

Test Results

High resistance reading = Good.

Low resistance reading = Faulty contacts — replace relay.

If a high resistance reading is observed, use jumper wires and connect the relay to the battery and re-check the contact switch operation as follows:

1. Connect the battery positive lead to the relay terminal marked No. 3 and the negative lead to relay terminal No. 4, Figure 72.

PREVIEW - YOUFIXTHIS.COM

Download full manual at youfixthis.com

PART 3
ELECTRICAL SYSTEMS
MODELS 1310-1510-1710
1710 OFFSET

Chapter 6
ELECTRICAL SYSTEMS — MODEL 1710 OFFSET

Section		Page
A.	WIRING, SWITCHES, GLOW PLUGS AND INSTRUMENTATION	69
B.	BATTERY	70
C.	STARTING SYSTEM	70
D.	CHARGING SYSTEM	70
E.	TROUBLE SHOOTING AND SPECIFICATIONS	70

A. WIRING, SWITCHES, GLOW PLUG AND INSTRUMENTATION

The Model 1710 offset tractor has a fuel gauge (6), Figure 119, located on the instrument panel in place of the fuel level indicator tube used on the standard 1710 tractor. This change requires the addition of a fuel sender unit (1), Figure 120, and changes to the wiring harness.

See Figure 121 for the model 1710 offset tractor electrical wiring diagram.

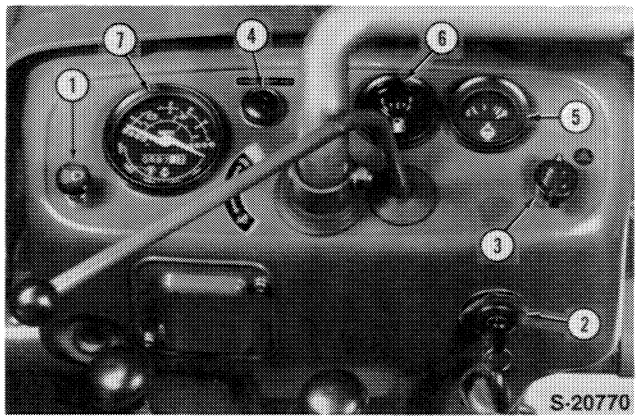

Figure 119
Instrument Panel — Model 1710 Offset Tractor
1. Light Switch
2. Key Start Switch
3. Flasher Switch
4. Glow Plug Indicator
5. Coolant Temperature Gauge
6. Fuel Gauge
7. Tachometer

FUEL GAUGE/SENDER

The fuel gauge sensor is located in the top of the fuel tank as shown, Figure 120.

The sensor float moves up or down with the change in the fuel level in the tank. As the float moves up or down it changes the resistance in the fuel gauge circuit causing the gauge pointer to follow the movement of the float and indicate the fuel level in the tank.

PREVIEW - YOUFIXTHIS.COM
Download full manual at youfixthis.com

PART 5
TRANSMISSION SYSTEMS
MODELS 1310-1510-1710
1710 OFFSET
(NON-SYNCRHOMESH
12 x 4 TRANSMISSION)

Chapter 1
NON-SYNCHROMESH 12 x 4 GEAR TRANSMISSION

Section		Page
A.	NON-SYNCHROMESH 12 x 4 GEAR TRANSMISSION — DESCRIPTION AND OPERATION	1
B.	NON-SYNCHROMESH 12 x 4 GEAR TRANSMISSION — OVERHAUL	5
C.	NON-SYNCHROMESH TRANSMISSION — SHIFT LEVER AND TOP COVER	11

Chapter 2
SYNCHROMESH 12 x 4 GEAR TRANSMISSION (NOT AVAILABLE ON 1710 OFFSET TRACTOR)

Section		Page
A.	SYNCHROMESH 12 x 4 GEAR TRANSMISSION — DESCRIPTION AND OPERATION	15
B.	SYNCHROMESH 12 x 4 GEAR TRANSMISSION — OVERHAUL	16
C.	SYNCHROMESH TRANSMISSION — SHIFT LINKAGE AND TOP COVER	28

Chapter 3
TROUBLE SHOOTING AND SPECIFICATIONS

Section		Page
A.	TROUBLE SHOOTING	33
B.	SPECIFICATIONS	34

PREVIEW - YOUFIXTHIS.COM

PRINTED IN U.S.A. REV. 6-86

Download full manual at youfixthis.com

PREVIEW - YOUFIXTHIS.COM

Download full manual at youfixthis.com

PART 6
POWER TAKE-OFF SYSTEMS
MODELS 1310-1510-1710
1710 OFFSET

Chapter 3
POWER TAKE-OFF SYSTEMS
MODEL 1710 OFFSET TRACTOR

Section		Page
A.	TRANSMISSION DRIVE POWER TAKE-OFF	13
B.	LIVE POWER TAKE-OFF	13
C.	GROUND DRIVE POWER TAKE-OFF	13

PREVIEW - YOUFIXTHIS.COM

A. TRANSMISSION DRIVE POWER TAKE-OFF

Same as for model 1710 standard tractor. See Chapter 1, Section "A."

B. LIVE POWER TAKE-OFF

Same as for model 1710 standard tractor. See Chapter 1. Section "B."

C. GROUND DRIVE POWER TAKE-OFF

DESCRIPTION AND OPERATION

The ground drive power take-off is standard equipment on the model 1710 offset tractor.

Two ground drive output shafts (1) are utilized on the model 1710 offset tractor and are located on each rear axle reduction housing, projecting from the inside of the gear case, as shown in Figure 15.

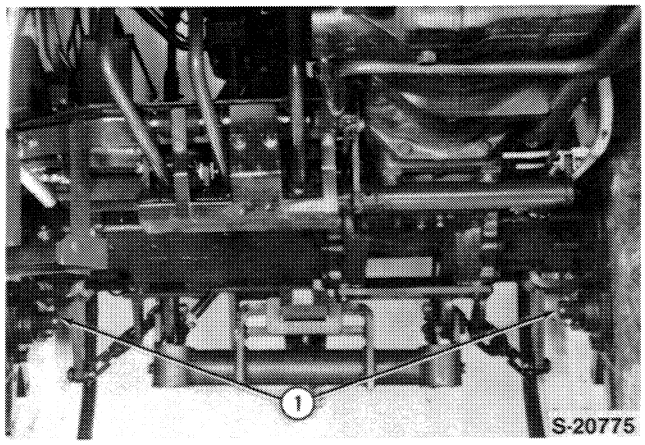

Figure 15
Ground Drive Power Take-Off

1. Power Take-Off Shafts

Download full manual at youfixthis.com

PINION BEARING PRE-LOAD	CONSTANT PULL
New Bearing	24.2-28.6 lbs. (11-13 kg)
Original Bearing	11.0-13.2 lbs. (5-6 kg)

NOTE: *Rotate the pinion shaft several times by hand before performing the pull scale test.*

Tighten the lock nut and secure by bending the locking washer tabs.

9. Position the differential assembly in the housing and install the right and left hand bearing carrier, Figure 46.

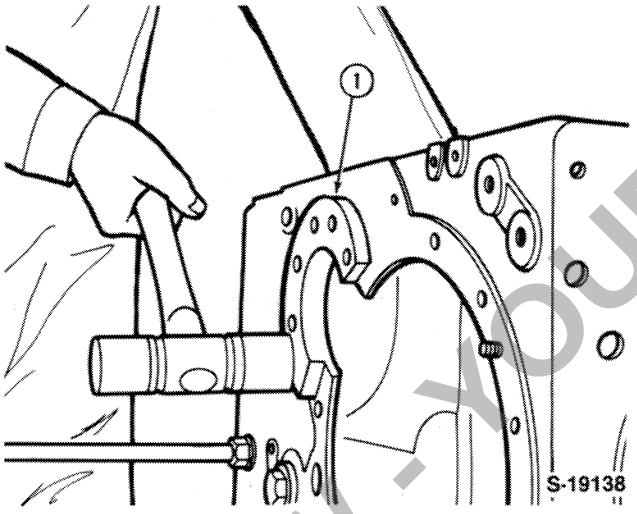

Figure 46
Differential Assembly
1. Bearing Carrier

NOTE: *When installing the original components use the same quantity and thickness of shims on each side as removed during disassembly.*

If new components are used, adjust the ring gear to pinion backlash and tooth contact pattern as follows:

Place a dial indicator gauge at right angle to the top of the ring gear tooth as shown, Figure 47.

Rock the ring gear back and forth and observe the dial indicator reading.

Adjust the carrier shims to obtain the correct backlash. See "Specifications," Chapter 2.

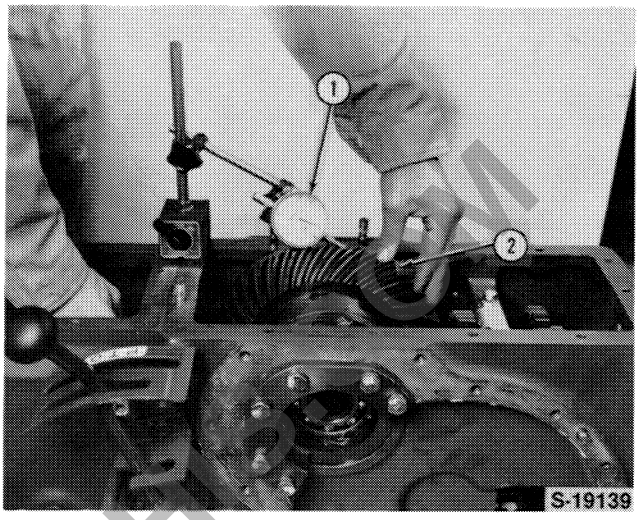

Figure 47
Ring Gear and Pinion Backlash Check
1. Dial Indicator 2. Ring Gear

Using prussion blue on the pinion gear teeth, rotate the pinion and check the gear tooth pattern. Adjust the differential and pinion gear shims to obtain the correct tooth contact. See "Specifications," Chapter 2.

10. Complete the assembly and installation following the disassembly and removal procedure in reverse.

REAR AXLE AND BRAKES — OVERHAUL

DISASSEMBLY — REAR AXLE

NOTE: *Prior to disassembly, the rear axle and final reduction housing assembly must be removed from the center housing. See Section "B" this Chapter.*

1. Remove the seal cover (2), Figure 48.

2. Remove the retaining bolts and separate the final reduction gear case (2) from the axle housing (1) as shown in Figure 49.

3. Remove the splined coupler (3).

4. Straighten the lock washer tabs (2) and remove the lock nut (1) and washer from the axle shaft, Figure 50.

5. Remove the gear case cover bolts (7), Figure 49, and separate the cover (6) from the housing (3).

PREVIEW - YOUFIXTHIS.COM
Download full manual at youfixthis.com

PART 8
HYDRAULIC SYSTEM

Chapter 2
HYDRAULIC PUMP AND FILTER

Section		Page
A.	HYDRAULIC PUMP AND FILTER — DESCRIPTION AND OPERATION	17
B.	HYDRAULIC PUMP AND FILTER — OVERHAUL	19

A. HYDRAULIC PUMP AND FILTER — DESCRIPTION AND OPERATION

The Model 1310 tractor utilizes a 6.3 g.p.m. (23.7 lpm) gear type hydraulic pump mounted on the right hand side of the engine, Figure 39. The pump is driven by the engine oil pump gear located at the front of the engine block.

A suction type filter is mounted on top of the hydraulic pump and has a replaceable element, Figure 40.

The Model 1510 tractor utilizes a 6.6 g.p.m. (25.2 lpm) pump and the Model 1710 utilizes a 7.8 g.p.m. (29.7 lpm) capacity pump. The Models 1510 and 1710 pumps are located on the left hand side of the engine, Figure 41, and are driven by the engine camshaft gear located at the front of the engine block.

The Models 1510 and 1710 use a suction type hydraulic filter located in the inlet line on the left hand side of the rear axle center housing, Figure 41. The filter is easily serviced by replacing the complete canister assembly.

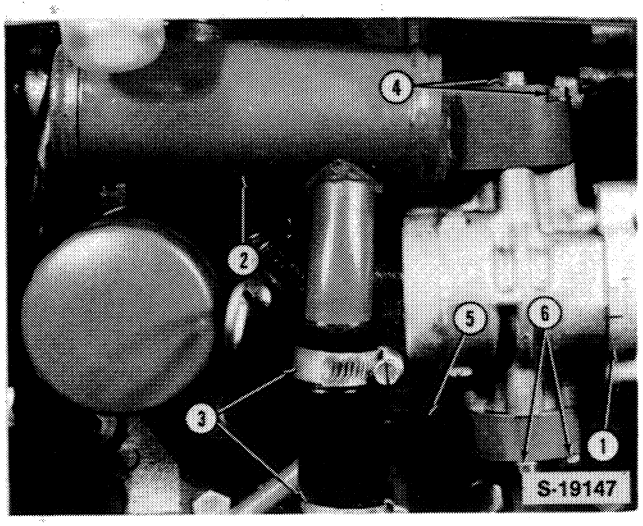

Figure 39
Hydraulic Pump — Model 1310

1. Pump Assembly
2. Inlet Filter
3. Suction Line Hose Clamps
4. Filter Mounting Bolts
5. High Pressure Line
6. High Pressure Line Mounting Bolts

PREVIEW - YOUFIXTHIS.COM

Download full manual at youfixthis.com

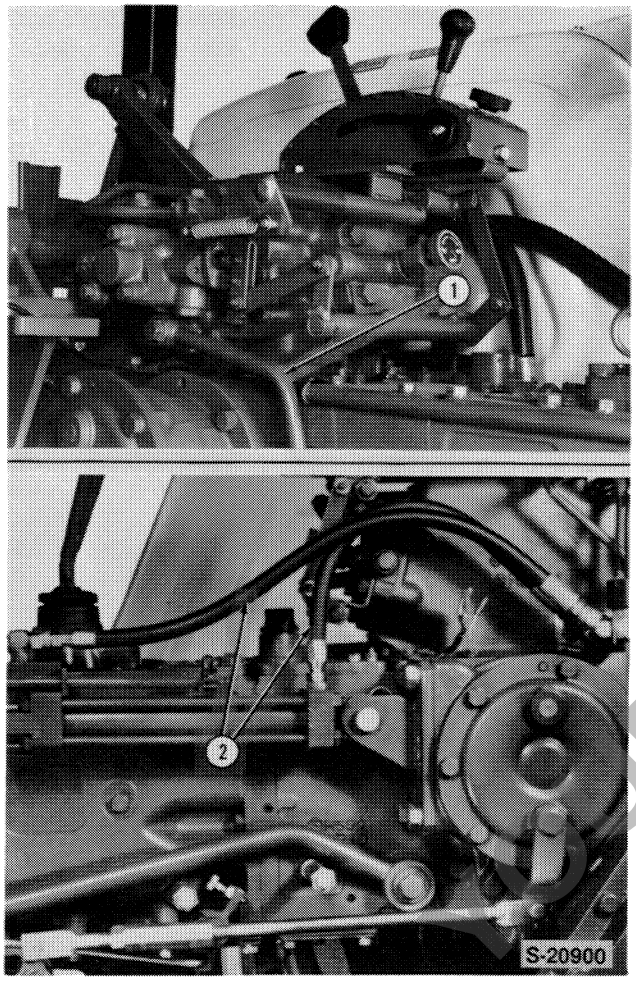

Figure 88
Lift Cover Removal

1. High Pressure Tube
2. Hose (2), Remote Cylinder

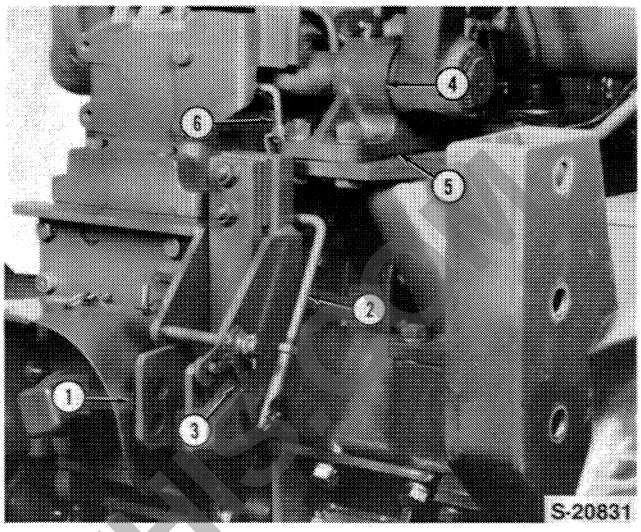

Figure 89
Draft Control Linkage

1. Top Link Bracket
2. Draft Control Link
3. Draft Control Arm
4. R.H. Rocker Shaft Support
5. Shims (Not Visible)
6. Position Control Link

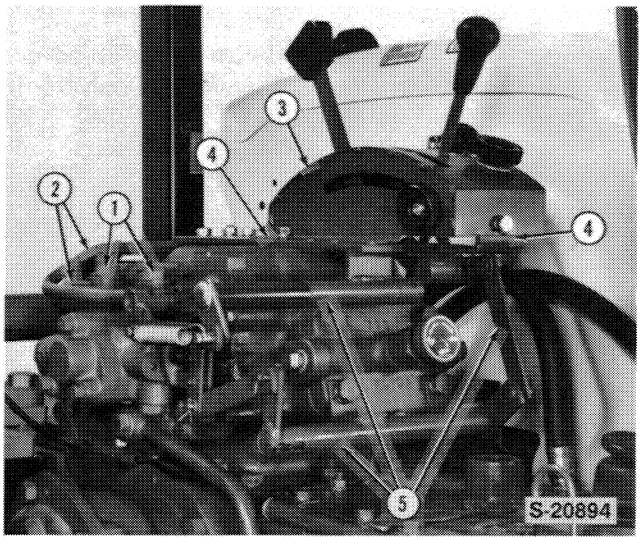

Figure 90
Remote Cylinder Tube and Banjo Bolt Removal

1. Banjo Bolts
2. Remote Cylinder Tubes
3. Quadrant
4. Quadrant Supports
5. Linkage

6. Remove the two banjo bolts (1) securing the hydraulic tubes to the remote control valve, Figure 90.

7. Remove the position and draft control lever link pins and disconnect the links (7), from the actuating shaft, Figure 91.

8. Remove the hydraulic control lever quadrant support and linkage as an assembly from the lift cover housing, Figure 90.

9. Disconnect the lift rods (1) from rocker shaft arms (2), Figure 92.

10. Remove the bolts from the lift cover and right side rocker shaft support (3), Figure 92.

NOTE: *Bolts of different length are used for the lift cover mounting. Observe the bolt length as removed for ease of reassembly.*

PREVIEW - YOUFIXTHIS

Download full manual at youfixthis.com

4. Remove the retaining screw (4) and withdraw the sensor from the control lever.

INSPECTION AND REPAIR

Reference, Figures 143 and 144

1. Resistance check through operating range of control lever.

   - Be sure engine is off and key switch is in the off position.
   - Disconnect the wiring harness connector.
   - Using an ohmmeter check the circuit resistance as follows.
   - Position the control lever in the full up position. Touch one ohmmeter lead to the sensor blue/yellow wire terminal and the other ohmmeter lead to the black wire terminal. The ohmmeter should read 400 ± 20 ohms.

     Then position the control lever to the full down position and observe the ohmmeter reading. The ohmmeter should now read 600 ± 30 ohms.

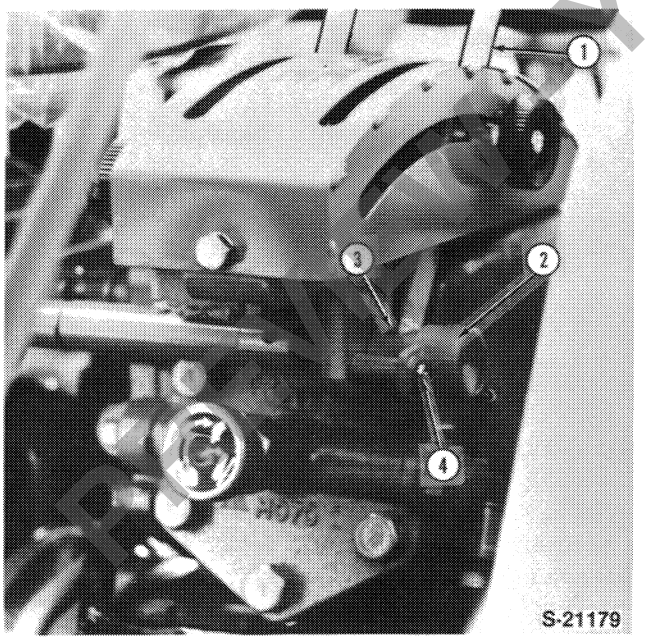

Figure 143
Hydraulic Quadrant — Model 1710 Offset

1. Mid-Mount Control Lever
2. Control Depth Setting Sensor
3. Set Screw — Control Lever
4. Mounting Screw

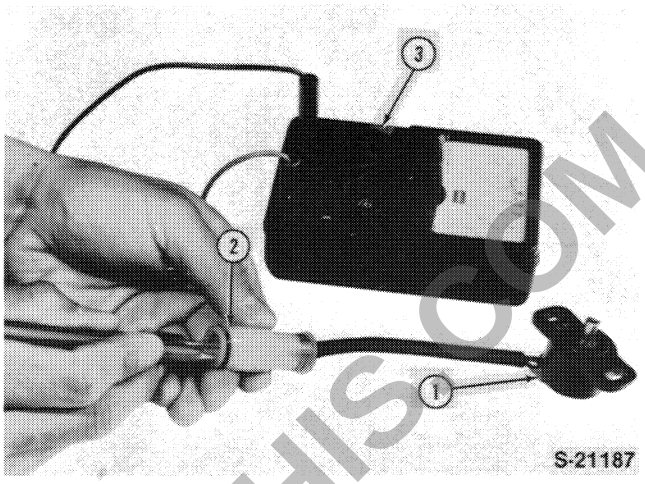

Figure 144
Control Sensor Circuit Resistance Test

1. Sensor Assembly 2. Connector 3. Ohmmeter

2. Total resistance check.

   - Connect one ohmmeter lead to the connector blue/red wire and the other ohmmeter lead to the black wire terminal and observe the ohmmeter reading.

     The ohmmeter should read 1000 ± 200 ohms.

CONTROL SENSOR RESISTANCE TEST

	WIRE COLOR CODE		RESISTANCE
Total Resistance	Black	Blue/Red	1000 ± 200
Control Lever — Up	Black	Blue/Yellow	400 ± 30
Control Lever — Down	Black	Blue/Yellow	600 ± 30

NOTE: *If the sensor resistance does not test correctly, perform the adjustment procedure as described in Section "C" and retest. If faulty, replace the sensor unit.*

INSTALLATION

1. Position the sensor assembly to the control lever being sure to align the drill hole in the sensor spindle with the set screw. Tighten the set screw securely.

Download full manual at youfixthis.com

PART 9
STEERING SYSTEMS

Chapter 2
POWER STEERING SYSTEM — MODELS 1310-1510-1710 TRACTORS

Section		Page
A.	POWER STEERING SYSTEM — DESCRIPTION AND OPERATION	11
B.	POWER STEERING SYSTEM — OVERHAUL	15

PREVIEW - YOUFIXTHIS.COM

A. POWER STEERING SYSTEM DESCRIPTION AND OPERATION

The power steering system is an integral power assist type system. The power steering consists of the integral power assist steering gear assembly (6), hydraulic pump (2) and flow priority valve (3) assemblies, Figure 25.

The integral power assist steering gear assembly, Figure 26, consists of the steering shaft (1), control valve assembly (2), ball nut and piston assembly (3) and sector shaft (4).

The control valve spool is mounted on the lower steering shaft. When the steering wheel is turned the action of the gear and ball nut create an end thrust on the shaft. This end thrust causes the steering shaft and control valve spool to move up or down depending on the direction of rotation. This axial movement of the control valve spool in the valve body directs the oil flow to the appropriate valve body ports.

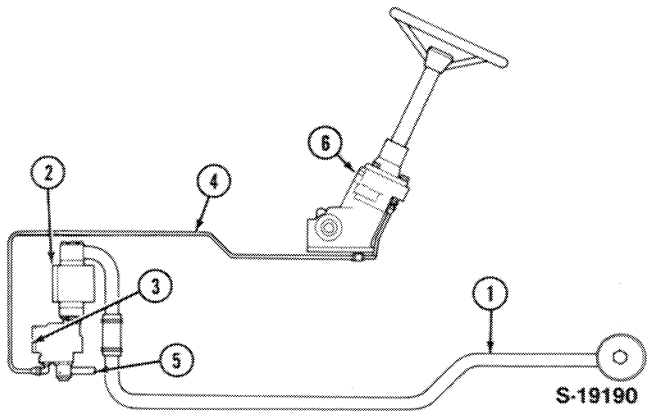

Figure 25
Power Steering System — Models 1510-1710

1. Suction Tube
2. Hydraulic Pump
3. Priority Flow Valve
4. Power Steering Pressure Tube
5. Hydraulic System Pressure Tube
6. Steering Gear Assembly

Download full manual at youfixthis.com

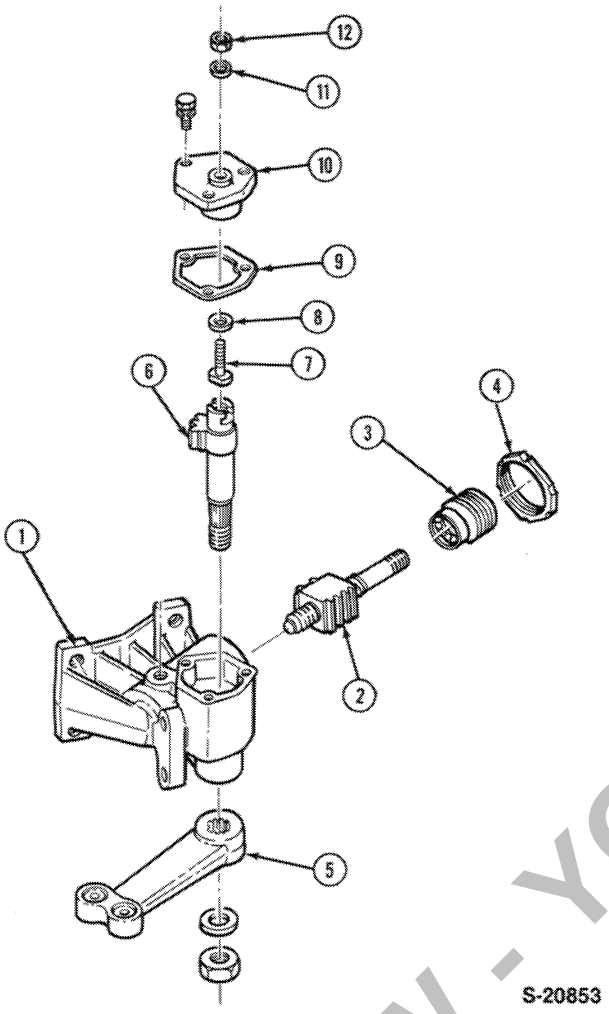

Figure 71
Steering Components — Manual Steering Gear

1. Steering Gear Case Assembly
2. Steering Gear Shaft and Ball Assembly
3. Steering Gear Rear Cover Assemly
4. Lock Nut
5. Pitman Arm
6. Sector Shaft
7. Adjusting Bolt
8. Shim
9. Gasket
10. Side Cover Assembly
11. Sealing Washer
12. Lock Nut

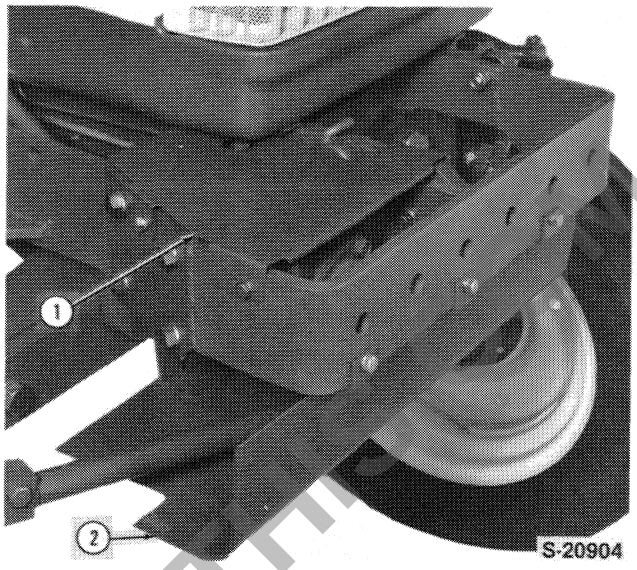

Figure 72
Steering Gear Covers

1. Top Cover (Power Steering)
2. Lower Cover



Figure 73
Steering Wheel and Shaft Support

1. Upper Support Bracket
2. Steering Shaft

3. Remove the universal joint clamp bolt (2) from the lower end of the steering shaft, Figure 74. Remove the steering shaft from the steering gear.

4. Remove the steering gear sector arm retaining nut and washer (1), Figure 75.

5. Scribe a reference mark on the sector arm and shaft for matching splines on assembly, Figure 76.

6. Remove the six steering gear mounting bolts, Figure 74.

PREVIEW - YOUFIXTHIS
Download full manual at youfixthis.com

PART 10
FRONT AXLE AND RELATED PARTS

Chapter 2
FRONT AXLE AND RELATED PARTS — FOUR-WHEEL DRIVE

Section **Page**

A. FRONT AXLE AND RELATED PARTS — DESCRIPTION AND OPERATION 9
B. FRONT AXLE AND RELATED PARTS — OVERHAUL 10

A. FRONT AXLE AND RELATED PARTS — DESCRIPTION AND OPERATION

The four-wheel drive is optional equipment and is available on all Models 1310-1510 and 1710 tractors, Figure 16.

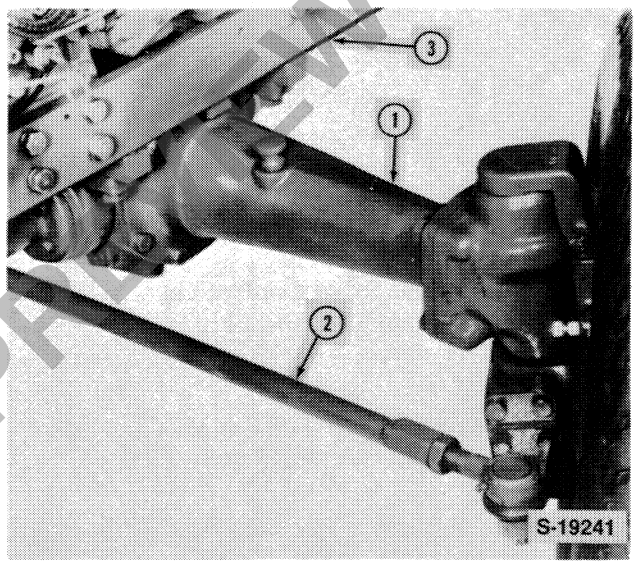

Figure 16
Front Axle Assembly — FWD (1710 shown)

1. Axle Assembly
2. Tie Rod
3. Support

The four-wheel drive system uses the same supporting system as used on the two-wheel drive Models.

The four-wheel drive front axle is not adjustable and the front wheels are not to be reversed.

The four-wheel drive tread setting for agricultural tires is:

1310	45.7 in. (116 cm)
1510	42.1 in. (107 cm)
1710	45.3 in. (115 cm)

The steering drag link is adjustable for straight ahead alignment of the steering gear and front wheels.

The front wheel tie rod assembly is adjustable for toe-in adjustments.

On the Model 1710 tractor equipped with power steering and four wheel drive, a damper cylinder, Figure 17, is utilized to stabilize the power steering operation. The cylinder is not repairable and must be replaced as an assembly if service is required.

Power to the front wheels flows from the differential side gear and axle shaft to the reduction gear box assembly, Figure 18. A pinion gear on the axle shaft drives an idler pinion and idler shaft in the drop box.

PREVIEW - YOUFIXTHIS.COM
Download full manual at youfixthis.com

PART 11
WHEELS AND TIRES

Chapter 1
WHEELS AND TIRES

Section		Page
A.	WHEELS AND TIRES — TREAD SETTING	1
B.	WHEELS AND TIRES — WEIGHT LIMITATIONS	6
C.	WHEELS AND TIRES — LUG BOLT TORQUE	10

PREVIEW - YOUFIXTHIS.COM

A. WHEELS AND TIRES — TREAD SETTING

TWO WHEEL DRIVE MODELS:

The front wheel tread setting is adjustable by a combination of repositioning the front axle and by reversing the front wheels. See Figure 1.

The rear wheel tread setting is adjustable by a combination of repositioning the wheel rims and discs and by reversing the wheels from right to left. See Figures 2 and 3.

Download full manual at youfixthis.com

PREVIEW ONLY

You're viewing 25 of 556 pages

The full manual includes:

- All 556 pages, complete
- Searchable PDF (find any keyword)
- No watermarks
- Instant download
- Print-ready quality

GET FULL MANUAL NOW

Ford 1310, 1510, 1710, 1710 Offset Repair Manual

Scan or click anywhere
youfixthis.com

Click anywhere on this page to get the full manual