Oil passes from the pump to an external, throw-away, spin-on type filter incorporating a relief valve which permits oil to be bypassed if filter blockage occurs, and so assures engine lubrication at all times.

Oil flows from the filter to the main oil gallery which runs the length of the cylinder block and intersects the camshaft follower chambers.

The main gallery also supplies oil to the crankshaft main bearings and to the connecting rod journals via drillings in the crankshaft. Drilled passages from each main bearing direct oil to the camshaft bearings.

The camshaft drive gear bushing is pressure lubricated through a drilled passage from the front main bearing. The gear has small oil passages machined on both sides which allow the oil to escape.

The timing gears are lubricated by oil from the cam follower chamber and the pressure lubricated camshaft drive gear bushing.

Cylinder walls, pistons and piston pins are splash lubricated by the connecting rods and rotating crankshaft.

An intermittent flow of oil is directed to the valve rocker arm shaft assembly via a drilled passage in the cylinder block located vertically above the No. 1 camshaft bearing. This drilling aligns with a corresponding hole in the cylinder head. As the camshaft turns, holes in the camshaft and camshaft bearing align and a regulated stream of oil is directed to the cylinder head and on up the rocker arm shaft support bolt to the rocker shaft. The oil flows from the shaft through drilled holes in each rocker arm bushing to lubricate both ends of the arms. Excess oil flows down the push rods and assists in lubricating the cam followers before draining back into the sump through cored openings in the block.

B. DIESEL ENGINE — OVERHAUL

CYLINDER HEAD, VALVES AND RELATED PARTS

REMOVAL

Reference — Figure 2

NOTE: *The cylinder head can be removed with the engine installed in the tractor.*

1. Disconnect the battery.
2. Remove the vertical muffler.
3. Drain the radiator and cylinder block.
4. Shut off the heater hose taps then disconnect and plug the heater hose openings.
5. Remove the radiator top hose.
6. Shut off the main fuel tank tap.
7. Remove the hood panel assembly.
8. Disconnect the air inlet hose at the intake manifold.
9. Remove the vertical type exhaust pipe and bracket.
10. Bend the lock tabs back and remove the bolts, exhaust manifold and gasket.
11. Disconnect the cold start fuel lines at the fuel tank and thermostart unit. See Part 2, Chapter 1.
12. Remove the injection lines from the fuel injection pump and injectors. Cap the exposed openings in the pump, injectors and line ends.
13. Disconnect the fuel lines and remove the fuel filters from the inlet manifold.

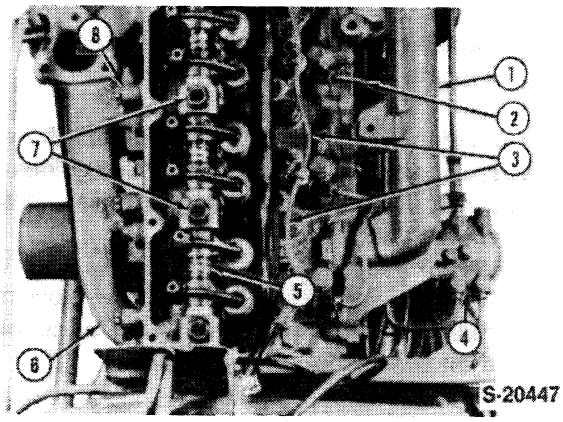

Figure 2
Engine with Rocker Arm Cover Removed

1. Intake Manifold
2. Injection Tubes
3. Leak-Off Tubes
4. Fuel Filter
5. Rocker Shaft Assembly
6. Exhaust Manifold
7. Rocker Shaft Retaining Bolts
8. Tab Washer

PREVIEW - YOUFIXTHIS.COM

Download full manual at youfixthis.com

DISASSEMBLY

Reference — Figure 28

1. Remove the pump screen.
2. Withdraw the retaining screw and washer assemblies then separate the inner and outer covers from the body and extract the rotor and shaft assembly.
3. Insert a self-tapping screw into the relief valve plug and pull the plug out of the body. Withdraw the relief valve and spring.

INSPECTION AND REPAIR

1. Wash all parts in a suitable solvent and dry with a clean lint free cloth or compressed air.
2. Inspect the inside of the pump cover and body for excessive wear.
3. Use a straight edge and feeler gauges to measure the end play between the inner rotor and the pump body and measure the clearance between the outer rotor and the pump body, Figure 29.
4. Use feeler gauges to measure the clearance between the periphery of the outer rotor and the pump body, Figure 30.

   Replace the rotor assembly and/or pump body if beyond any of the specified limits, see "Specifications," Chapter 3.
5. Check the relief valve spring tension, see "Specifications," Chapter 3.

PREVIEW - YOUFIXTHIS.COM

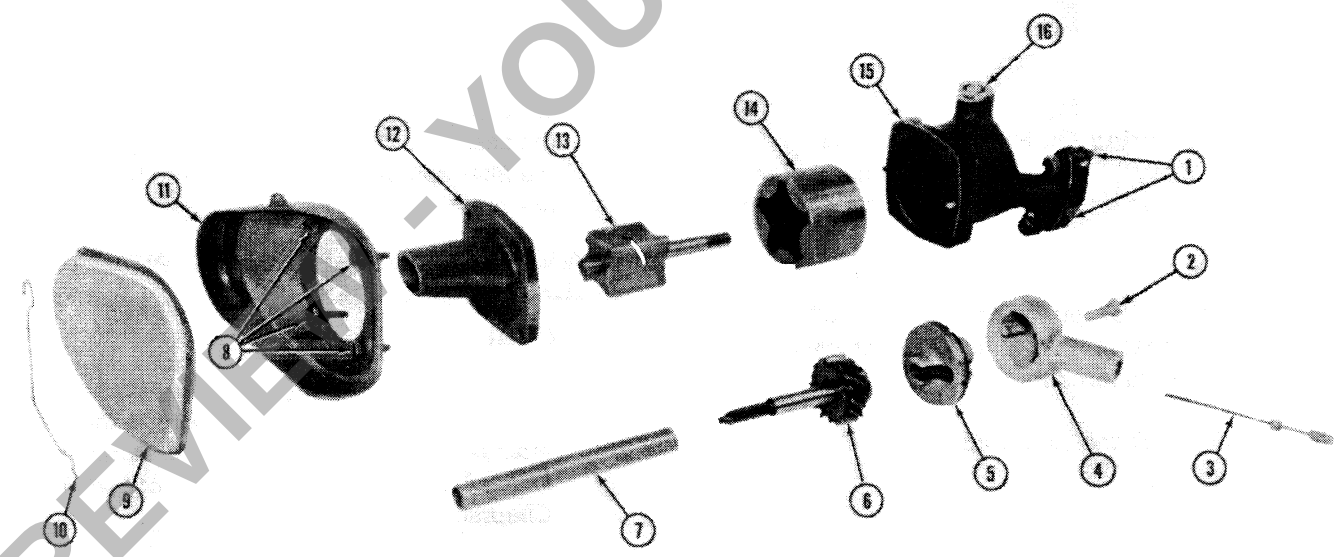

L-14634

Figure 28
Oil Pump Assembly

1. Oil Pump Retaining Bolts
2. Adapter Retaining Bolt
3. Proofmeter Drive Shaft and Cable Assembly
4. Proofmeter Drive Shaft Adapter
5. Driveshaft Adapter Mounting Base
6. Oil Pump Drive Shaft and Gear Assembly
7. Intermediate Shaft
8. Screw and Washer Assemblies
9. Screen
10. Spring
11. Outer Cover
12. Inner Cover
13. Inner Rotor and Shaft Assembly
14. Outer Rotor
15. Body
16. Pressure Relief Valve Assembly

Download full manual at youfixthis.com



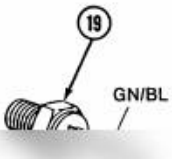

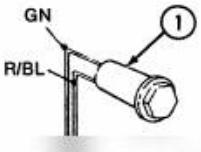

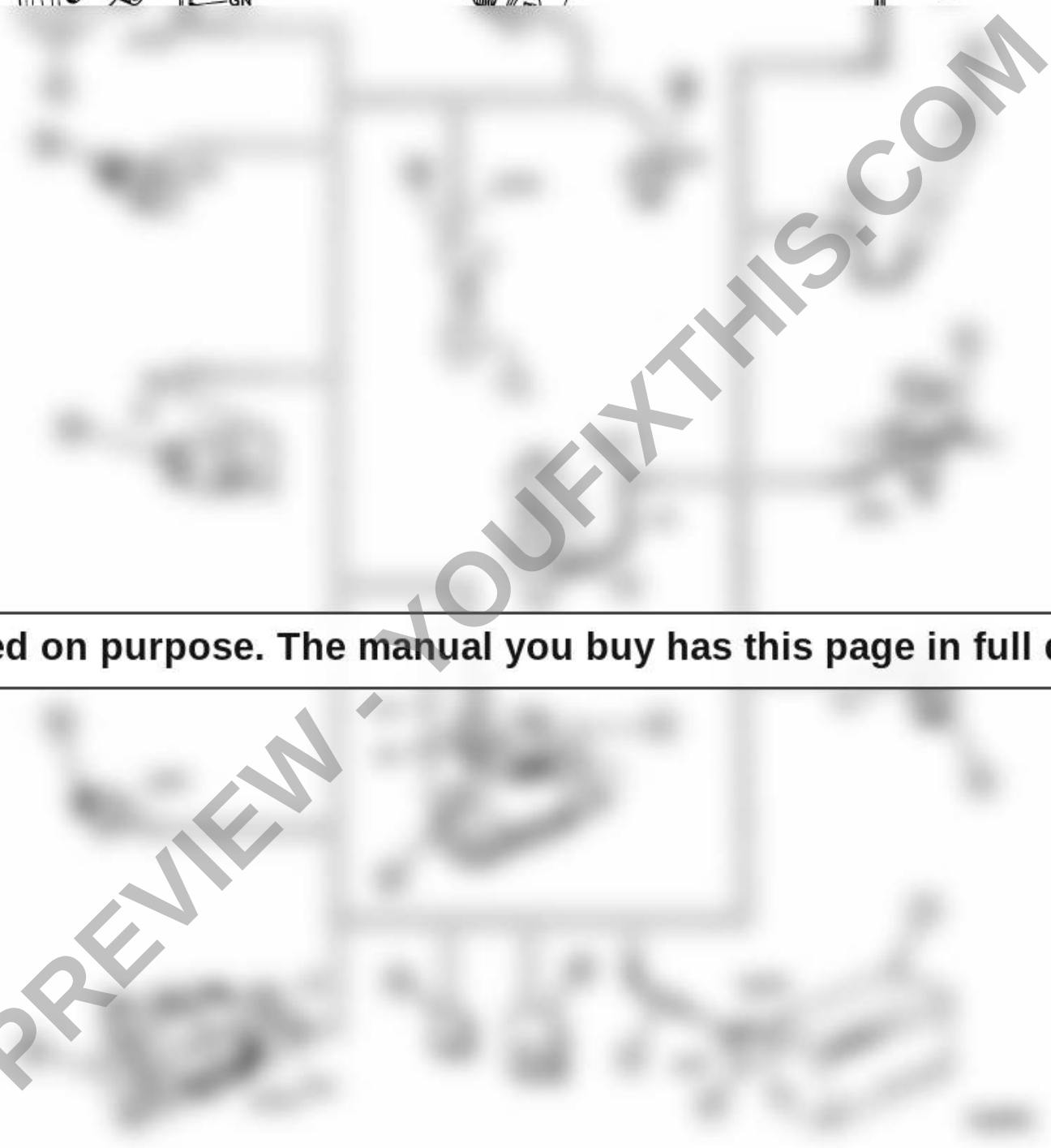

Blurred on purpose. The manual you buy has this page in full quality.

PREVIEW - YOUFIXTHIS.COM

Download full manual at youfixthis.com

The valve is activated by an electro solenoid, Figure 62, and situated on the outside of the transmission case for easy access and service. Leading to the valve are three hydraulic lines, Figure 63, a connection to the transmission sump or reservoir, a connection to the regulated oil pressure gallery within the main shaft distributor and a connection to the main shaft or shuttle control valve.

Having previously described the function of the hydraulic circuitry, it can now be appreciated that by disconnecting the oil supply to the main control valve and allowing the oil within the clutches to exhaust, the transmission will be neutralized.

Figures 63 and 64 show the function of the transmission dump valve in the normal transmission engaged condition and in the activated transmission neutralized condition.

In Figure 63, regulated pressure oil from the main distributor is linked by the dump valve to the shuttle control valve and hydraulic pressure is available to be

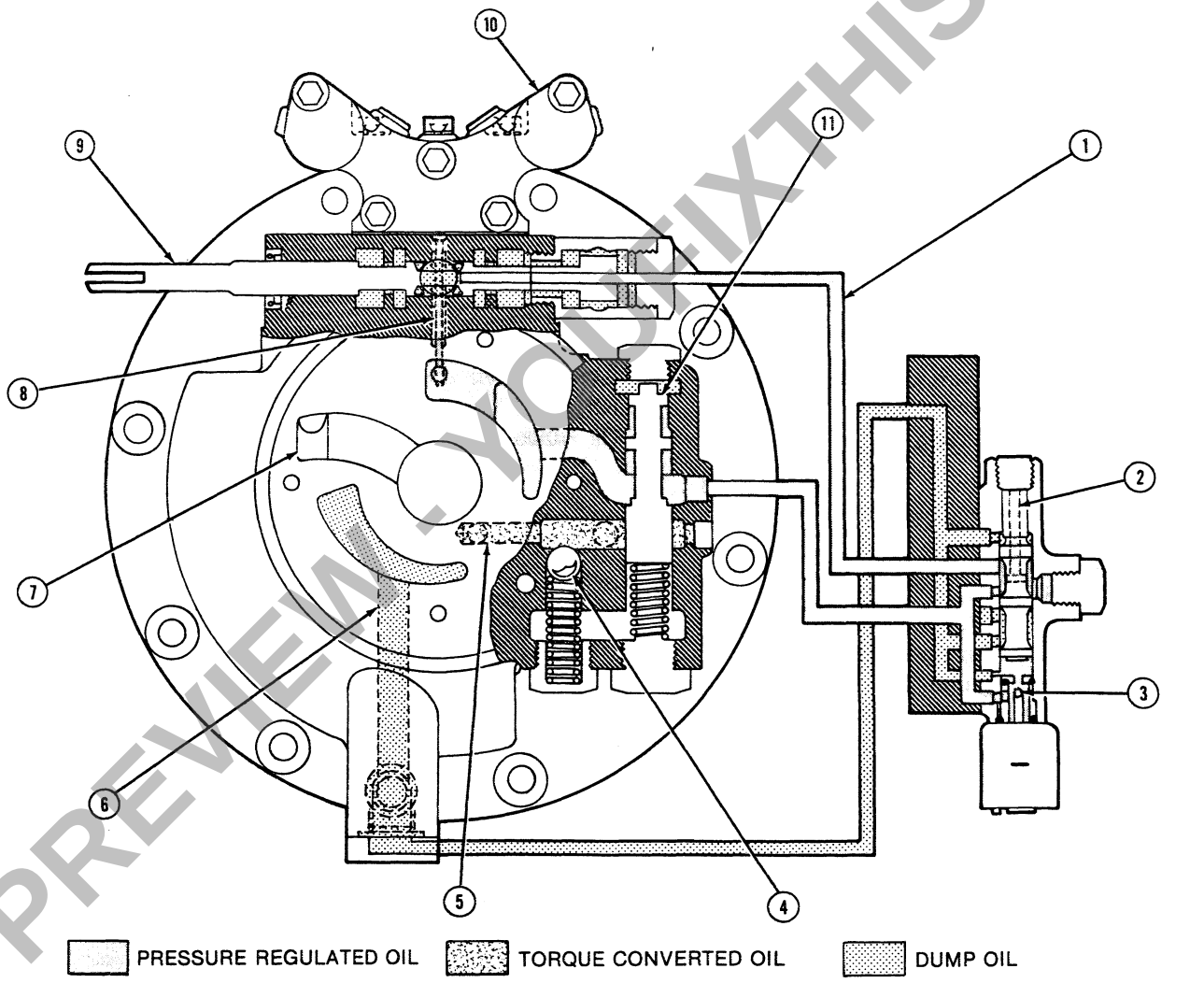

Figure 63
Oil Flow — Oil Distributor, Normal Operation

1. Control Valve Pressure Feed
2. Transmission Disconnect Valve
3. Solenoid
4. By-Pass Valve
5. Torque Converter Feed
6. Pump Feed
7. Torque Converter Return
8. Modulating Valve Pressure Feed
9. Control Valve
10. Modulating Valve Assembly
11. Pressure Regulating Valve

PREVIEW - YOUFIXTHIS.COM

Download full manual at youfixthis.com

TORQUE VALUES	lbs. ft.	(Nm)	(Mkg)
Main Bearing Bolts	115-125	(156-159)	(16-17)
Connecting Rod Nuts	60-65	(82-88)	(8-9)
Cylinder Head Bolts (with Engine Cold)	105-115	(143-156)	(14.5-16)

PREVIEW - YOUFIXTHIS.COM

Blurred on purpose. The manual you buy has this page in full quality.

Download full manual at youfixthis.com

PART 1
ENGINE SYSTEMS

Chapter 3
TROUBLE SHOOTING, SPECIFICATIONS AND SPECIAL TOOLS

Section		Page
A.	TROUBLE SHOOTING	37
B.	SPECIFICATIONS	41
C.	SPECIAL TOOLS	50

PREVIEW - YOUFIXTHIS.COM

A. TROUBLE SHOOTING

The following table lists problems and their possible causes with recommended remedial action.

PROBLEM	POSSIBLE CAUSE	REMEDY
Engine does not develop full power	1. Clogged air cleaner.	1. Clean or replace element.
	2. Fuel line obstructed.	2. Clean.
	3. Faulty injectors.	3. Clean and reset.
	4. Low cylinder compression.	4. Replace piston rings or re-bore/re-sleeve as necessary.
	5. Incorrect valve lash adjustment.	5. Check and reset.
	6. Burnt, worn or sticking. valves.	6. Replace valves and/or guides.
	7. Blown head gasket.	7. Check head flatness and fit new gasket.
	8. Incorrect fuel delivery.	8. Check injectors and pump.

Download full manual at youfixthis.com

PROBLEM	POSSIBLE CAUSE	REMEDY
Water temperature gauge fails to reach normal operating temperature	1. Faulty temperature sender switch.	1. Replace sender switch.

PREVIEW - YOUFIXTHIS.COM

Blurred on purpose. The manual you buy has this page in full quality.

Download full manual at youfixthis.com

MODEL NUMBER — CODE

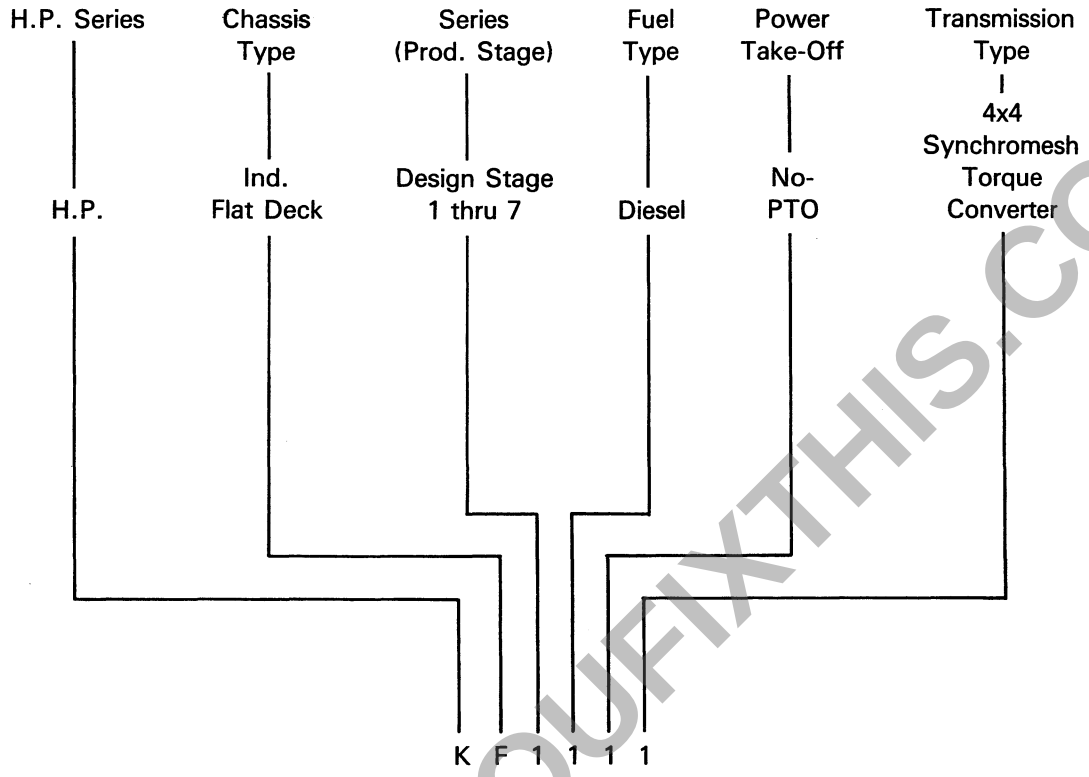

KEY TO PRODUCTION DATE CODES

First Number YEAR	First Letter MONTH		Second Number DAY OF MONTH	Second Letter PRODUCTION SHIFT
4 — 1984	A—Jan.	H—Aug.	01-31	A—Midnight
5 — 1985	B—Feb.	J—Sept.		B—Day
6 — 1986	C—March	K—Oct.		C—Afternoon
7 — 1987	D—April	L—Nov.		
8 — 1988	E—May	M—Dec.		
9 — 1989	F—June			
0 — 1990	G—July			

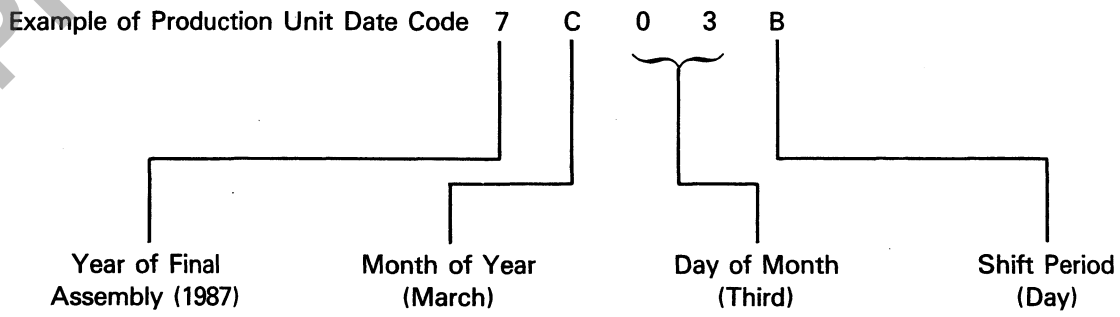

PREVIEW - YOUFIXTHIS.COM

Download full manual at youfixthis.com

3. Check the piston rings for minimum gap prior to installation in the relevant cylinder, Figure 43. Use a piston crown to squarely locate the ring in the bore. New rings should be checked for side clearance in the piston as previously described in this Chapter.

4. Using an expander to install the piston rings, starting with the oil control ring in the bottom groove and working upwards.

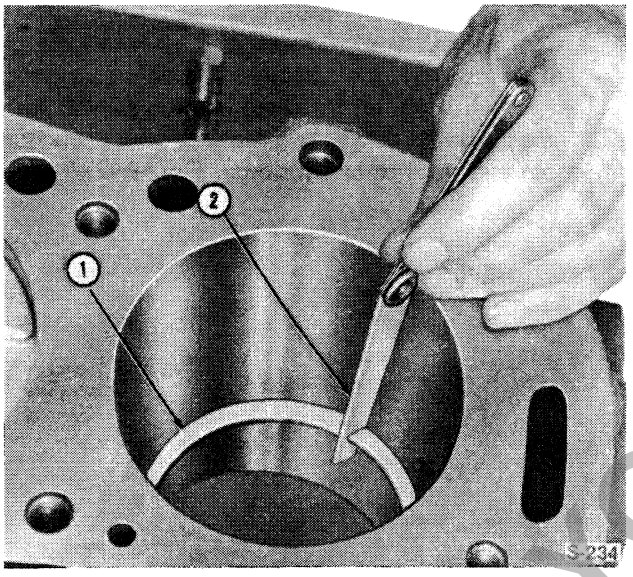

Figure 43
Checking Piston Ring Gap
1. Piston Ring 2. Feeler Gauge

PISTON RINGS:

The piston ring set comprises of:

- 2 Compression Rings.
- 1 Oil Control Ring.
- 1 Spiral or rail type Ring Expander for Oil Control Ring.

Three different types of ring expanders are commonly used, Figure 44.

The "wave type" expander provides the least amount of wall pressure.

The "spiral spring" expander provides greater wall pressure and is used behind the oil control ring.

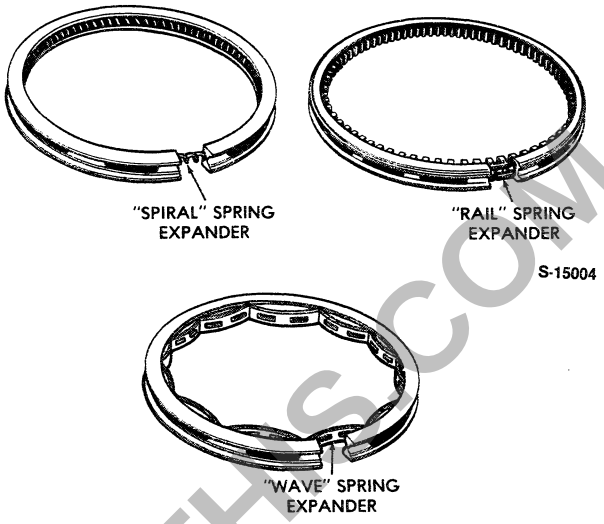

Figure 44
Piston Rings

The "rail type" spring expander provides slightly more wall pressure than the spiral spring and is an alternate design used interchangeably with the "spiral spring" expander.

INSTALLATION

The design of the piston rings and the identification markings on the rings varies among engines. It is imperative that each of the repective piston rings is installed correctly in its' respective ring groove. Use an expander to install the piston rings, starting with the oil control ring in the bottom groove and working upwards.

OIL CONTROL RING:

Install the oil control ring in the bottom groove as follows:

1. Open the coil spiral spring at the guide pin. Place the coiled spring in the oil goove of the ring, inserting the guide pin into the open end of the coil. Close until the spring ends butt.

2. Install the cast iron ring with either side up, with the inside groove of the ring over the coiled spring, placing the ring gap opposite the coil spring ends.

PREVIEW - YOUFIXTHIS.COM
Download full manual at youfixthis.com

DIESEL FUEL SYSTEMS (Con't.)

PROBLEM	POSSIBLE CAUSE	REMEDY
Engine does not develop full power or speed.	1. Incorrect throttle adjustment.	1. Check for insufficient throttle control movement.
	2. Incorrect maximum no-load speed.	2. Check maximum no-load speed adjustment.
	3. Fuel starvation.	3. Check and flush clean restricted fuel lines and filters.
	4. Air in system.	4. Check for air leaks on the suction side of the system.
	5. Incorrect timing.	5. Check pump timing.
	6. Low compression.	6. Check engine compression.
	7. Incorrect engine timing.	7. Check for improper valve adjustment or faulty valves.
Engine emits black smoke	1. Restricted air intake.	1. Check for a restricted air intake.
	2. Engine overheating.	2. Check cooling system.
	3. Incorrect timing.	3. Check the pump timing.
	4. Faulty injectors.	4. See injector trouble shooting.
	5. Low compression.	5. Check the engine compression
	6. Incorrect engine timing.	6. Check the engine valves.
Engine emits black smoke	1. Faulty injectors.	1. Overhaul or renew injectors.
Nozzle leak back excessive.	1. Worn needle valve.	1. Renew needle valve and nozzle holder.
	2. Dirty nozzle and/or holder.	2. Clean and lap nozzle and holder.
	3. Loose nozzle retaining nut.	3. Tighten nut.
Nozzle opening pressure incorrect.	1. Adjusting nut loose.	1. Tighten nut.
	2. Damaged nozzle or seized needle valve.	2. Renew needle valve and nozzle holder.
	3. Blocked nozzle holes.	3. Clean nozzle.
Nozzle seat leakage.	1. Dirty nozzle and/or nozzle holder.	1. Clean and lap nozzle and nozzle holder.
	2. Sticking needle valve.	2. Clean needle valve and nozzle holder.
Incorrect spray pattern.	1. Dirty nozzle and/or nozzle holder.	1. Clean and lap nozzle and nozzle holder.
	2. Restricted nozzle holes.	2. Clean and lap nozzle and nozzle holder.
	3. Damaged needle valve or nozzle.	3. Replace needle valve and nozzle holder.

PREVIEW - YOUFIXTHIS.COM

Download full manual at youfixthis.com

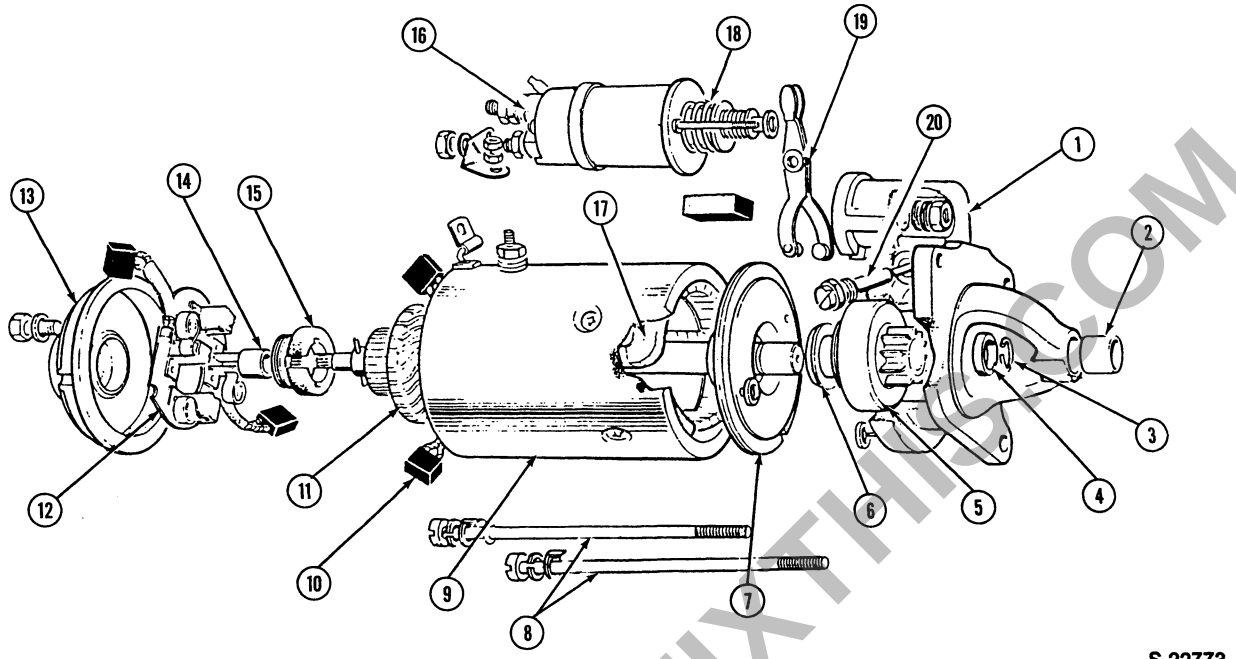

S-22773

Figure 16
Starting Motor — Exploded View

1. Drive End Bracket
2. Bushing
3. Snap Ring
4. Thrust Collar
5. Drive Assembly
6. Engagement Lever Guide
7. Inner Plate
8. Through Bolts
9. Casing
10. Brush (Field Coil)
11. Armature
12. Brush Carrier
13. Commutator End Cover
14. Bushing
15. Brake Shoes
16. Solenoid Assembly
17. Field Coils
18. Return Spring
19. Engagement Lever
20. Eccentric Pivot Pin

Testing Armature for Grounded Circuits:

With a standard voltmeter (0-20 volts) proceed as follows:

1. Attach the voltmeter negative lead to the battery negative terminal.
2. Attach a jumper lead to the battery positive terminal.
3. Touch the armature core with the jumper lead while at the same time touching a commutator segment with the voltmeter positive lead. Test each segment of the commutator in this manner.
4. Observe the voltmeter and note if a voltage reading occurs. If voltage is evident, the armature windings are grounded and a new armature must be installed.

Testing Field Coils for Open Circuits:

1. Connect the voltmeter positive lead to the starting motor field terminal.
2. Connect the voltmeter negative lead to the battery negative terminal.
3. Attach a jumper lead between the battery positive terminal and one of the insulated brushes. The voltmeter should indicate battery voltage.
4. Repeat the complete test with the jumper lead connected to the other insulated brush. The voltmeter should indicate battery voltage.
5. Disconnect the voltmeter positive lead from the starting motor field terminal and connect it to the eyelet wire. Connect the jumper lead between the battery positive terminal and, in turn, to each of

PREVIEW - YOUFIXTHIS.COM

Download full manual at youfixthis.com

TORQUE VALUES lbs.-ft. (Mkg)

Starting Motor Through Bolts 5 (0.69)

Starting Motor to Engine Adaptor Plate Bolts 30-35 (4.0-4.5)

Starting Motor Solenoid Terminal Nuts ..... 24 lbf. in (0.276)

Starting Motor Solenoid Retaining Nuts 4.5 (0.622)

The following general nut and bolt installation torque requirements (lubricated) apply to any operation not previously listed.

Size	Lbs. Ft.	Nm.	Mkg.
METRIC BOLTS			
M4	2	2.7	0.28
M5	4.0-4.5	5.0-6.2	0.55-0.62
M6	6-8	8.5-10.6	0.9-1.1
M8	16-18.5	21-25	2.2-2.5
M10	30-37	41-51	4.2-5.1
M12	52-66	70-90	7.2-9.1
INCH BOLTS			
6-32	1	1.4	0.14
6-40	1	1.5	0.15
8-32	1.5-2.0	2.1-2.9	0.21-0.28
8-36	1.5-2.0	2.1-3.1	0.21-0.28
10-24	2-3	3.0-4.2	0.28-0.41
10-32	2.5-3.5	3.3-4.8	0.35-0.48
1/4-20	5-7.5	6.8-10.1	0.7-1.0
1/4-28	6-8	7.8-11.6	0.8-1.1
5/16-18	11-15	15-20	1.5-2.0
5/56-24	12-16	17-21	1.6-2.2
3/8-16	20-26	28-35	2.8-3.5
3/8-24	21-29	29-39	2.9-4.0

C. SPECIAL TOOLS

DESCRIPTION	TOOL NO.
Pulling Attachment (Small)	9190
Pulling Attachment (Large)	9526
Puller — Reversible Arm (Small)	9196
Step Plate Adaptors	9210

PREVIEW - YOUFIXTHIS.COM

Download full manual at youfixthis.com

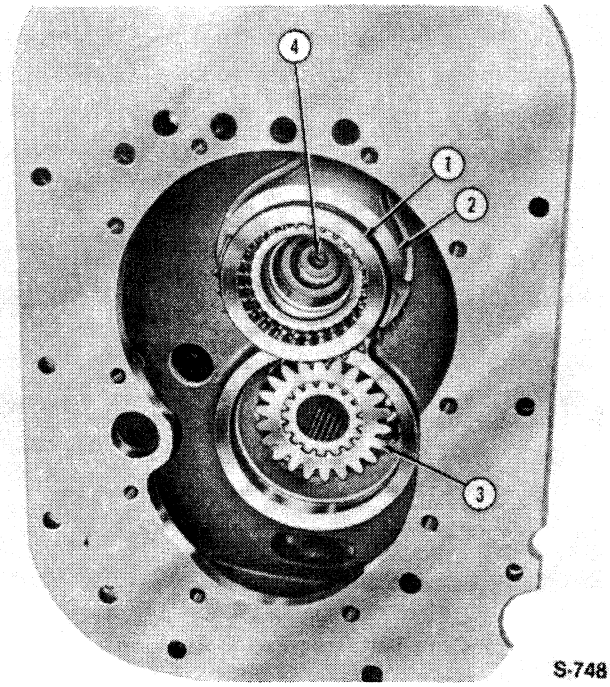

Figure 20
Transmission Rear Components

1. High-Low Sliding Coupling
2. High-Low Shift Fork
3. Coupling
4. Main Shaft

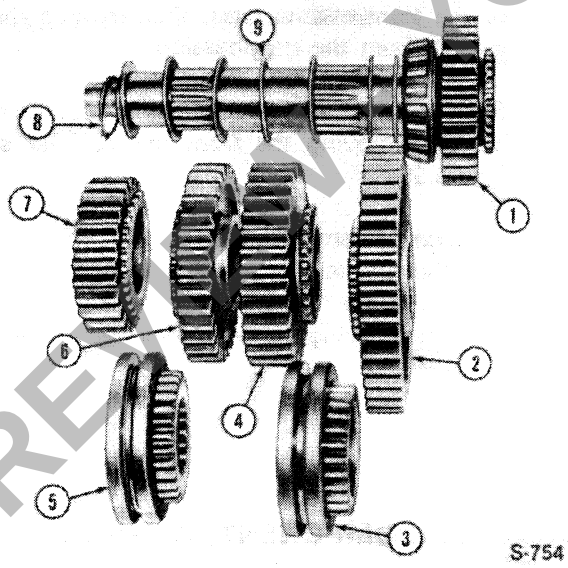

Figure 21
Main Shaft Components

1. Main Shaft
2. 43T Gear
3. Connector and Coupling
4. 33T Gear
5. Connector and Coupling
6. 32T Gear
7. 25T Gear
8. Snap Ring
9. Thrust Washer

REVERSE IDLERS AND TRANSMISSION COUNTERSHAFT

1. Remove the reverse idler shaft retaining bolt, Figure 17, from the left-hand side of the transmission case.

2. Remove the shift fork shaft, Figure 22, from the rear of the case and remove the 3rd/6th shift fork.

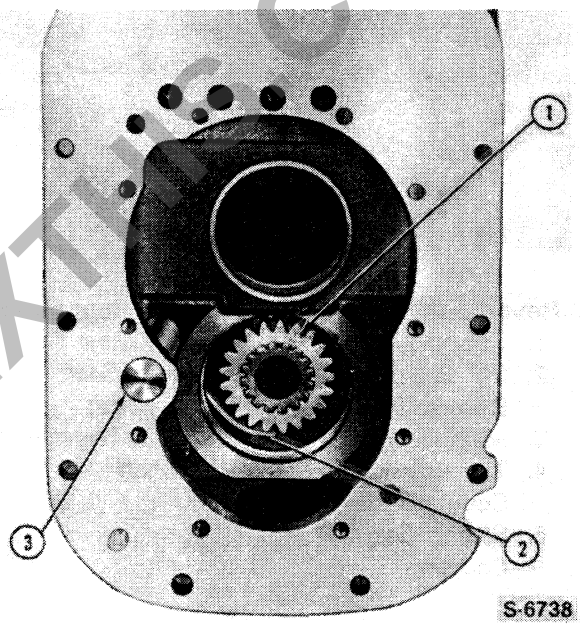

Figure 22
Shift Fork and Shaft

1. Sliding Gear Coupling
2. Shift Fork
3. Shift Fork Shaft

3. Pull the rear reverse idler shaft, Figure 23, from the rear of the transmission and remove the rear reverse idler gear and bushing.

4. Pull the sliding gear coupling (3), Figure 23, from the rear of the transmission countershaft and remove the snap ring that retains the countershaft rear bearing, Figure 24.

5. Using Tool No. 9210-5, and a suitable drift, drive the transmission countershaft, Figure 23, rearward until the countershaft main gear contacts the front reverse idler gear. Continue to drive the countershaft rearward, out of the main and 30-tooth gears, until the countershaft rear bearing is free. The front bearing might remain in the web of the transmission case. Refer to Figure 25.

PREVIEW YOUFIXTHIS.COM

Download full manual at youfixthis.com

DISASSEMBLY

1. Unscrew the neutral start switch from the top of the cover and remove the switch plunger from the switch retainer, Figure 69.

2. Using a screwdriver, or suitable spring compressor, compress the spring enough to remove the spring seat. Remove the seat.

3. Pull the rubber seal from the shift lever socket on top of the cover, then pull the shift lever from the cover. Remove the spring and shifter latch.

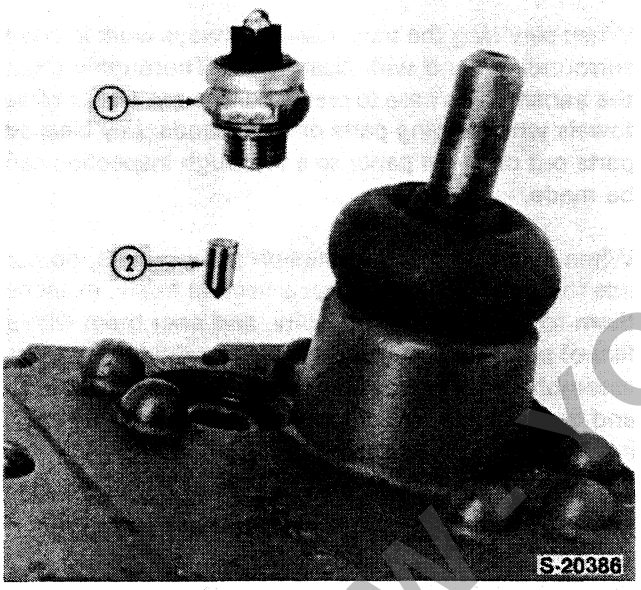

Figure 69
Neutral Start Switch Removal
1. Switch Assembly 2. Plunger

INSPECTION

1. Inspect the conical (pointed) end of the switch plunger for nicks and burrs. If nicks and burrs cannot be removed by polishing, install a new plunger.

2. Inspect the spherical diameters of the shift lever for excessive wear (flat spots). If excessively worn, install a new lever.

3. Check all bolts for tightness.

4. Check the neutral start switch for operation by connecting the switch to a suitable bulb and battery as illustrated in Figure 70.

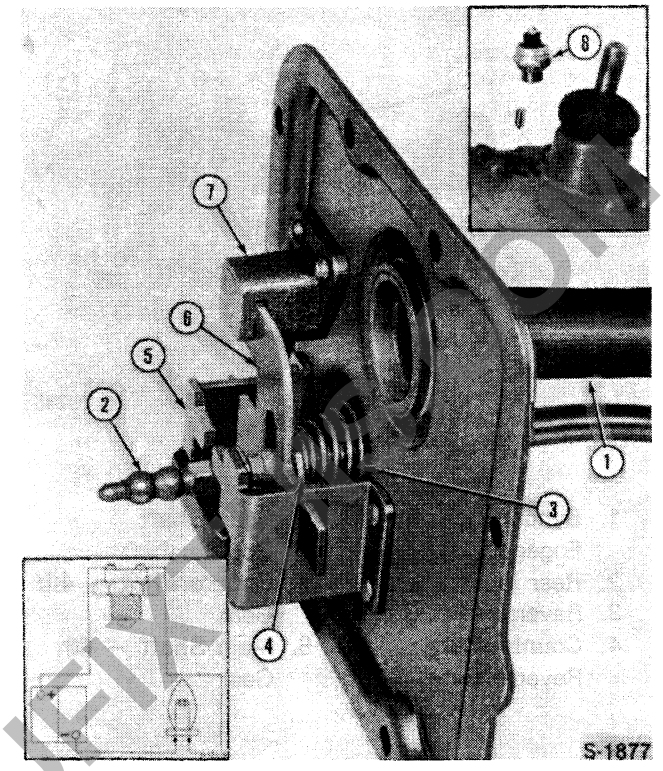

Figure 70
Gearshift Lever and Neutral Start Switch
1. Filler Tube
2. Gearshift Lever
3. Spring
4. Spring Seat
5. Stop Plate
6. Shift Latch
7. Starter Neutral-Switch Retainer
8. Switch

5. Depress and then release the operating button. The switch is operating correctly if the light comes on when the button is depressed and goes out when the button is released. If the switch is faulty, install a new switch.

ASSEMBLY

1. Install the shifter latch between the stop plate and switch retainer, Figure 69.

2. Place the spring between the latch and cover, then install the shift lever.

3. Using a screwdriver, or suitable spring compressor, compress the spring enough to install the spring seat. Install the seat, being sure the spring is seated around the step in the seat.

PREVIEW - YOUFIXTHIS.COM
Download full manual at youfixthis.com

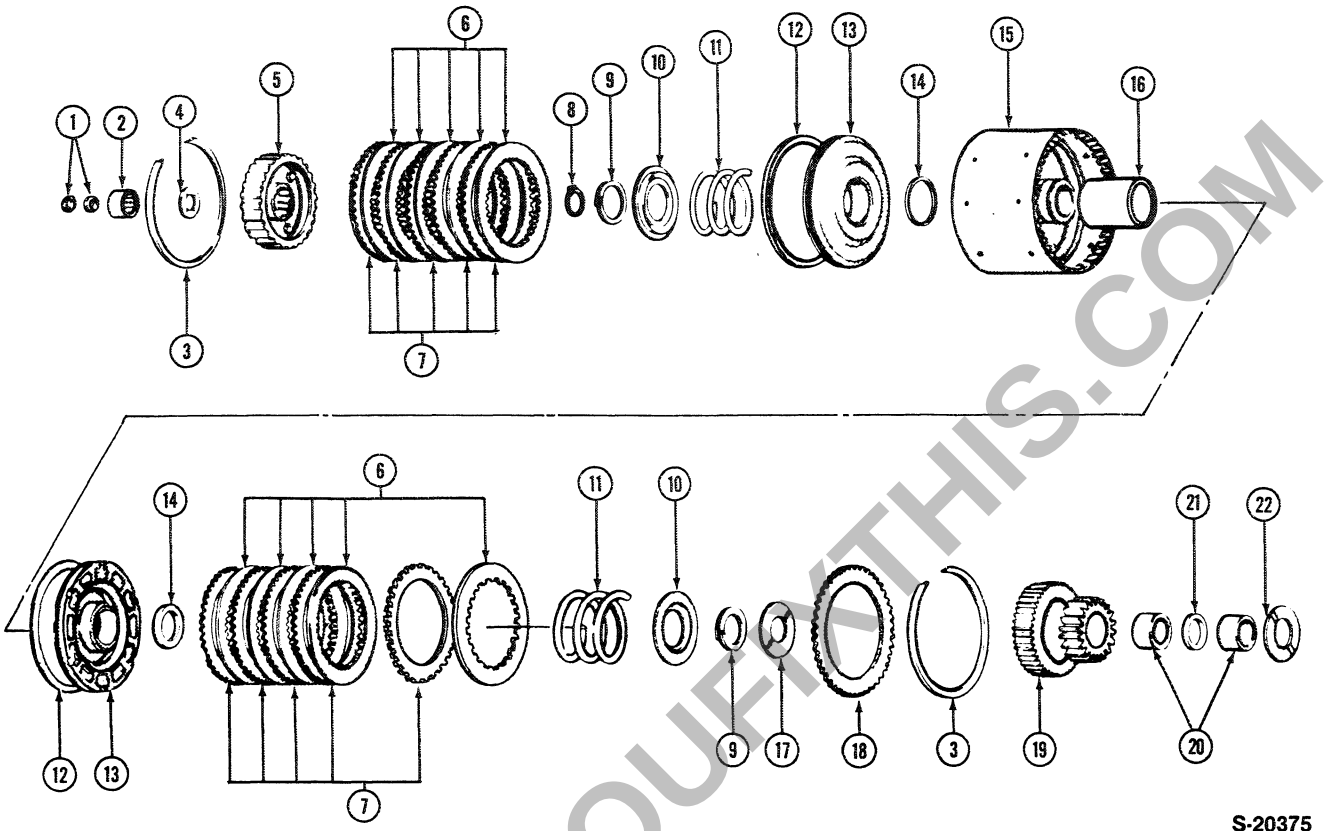

Figure 120
Power Reversing Clutch Components

1. Seal Rings (2)
2. Bearing
3. Snap Ring (2
4. Thrust Washer
5. Clutch Hub Front
6. Clutch Discs — Int. Splined Bronze
7. Clutch Discs — Ext. Splined Steel
8. Retaining Ring
9. Snap Ring (2)
10. Spring Seat (2)
11. Spring (2)
12. 'O' Ring Seal (2)
13. Piston (2)
14. O-Ring (2)
15. Clutch Housing
16. Bushing
17. Thrust Washer
18. Drive Plate
19. Clutch Hub and Gear — Rear
20. Bushing (2)
21. Spacer
22. Thrust Washer

125. Then drive the idler gear shaft through the gear just enough to remove the gear. The shaft need not be driven from the retainer.

7. Remove the gear, two fiber spacers (one on each side of the gear), and the bearing from the retainer.

INSPECTION

1. Thoroughly clean the rear input shaft, bearing and idler gear retainer, Figure 121, with suitable solvent, then blow dry with compressed air. Use compressed air to clean out the oil passages in the rear input shaft, Figure 121. Do not spin the bearing with compressed air.

2. Check the bearing on the rear input shaft, Figure 121, for smooth rotation. If the bearing is worn, a new bearing should be installed during assembly.

NOTE: *If a new bearing is to be installed, a new bearing cup must also be installed, Figure 122.*

3. Inspect the sealing rings, Figure 121, for cracks and wear, and the sealing ring grooves in the shaft for wear. Install new parts as required during assembly.

4. Inspect the gear teeth and the splines on the rear input shaft for burrs. Remove burrs with fine emery cloth or a fine stone.

PREVIEW - YOUFIXTHIS.COM

Download full manual at youfixthis.com

PART 7
REAR AXLE AND BRAKES

Chapter 1
REAR AXLE OVERHAUL

Section		Page
A.	REAR AXLE — DESCRIPTION AND OPERATION	1
B.	REAR AXLE SHAFT ASSEMBLY OVERHAUL	3
C.	PLANETARY REDUCTION GEAR ASSEMBLY AND AXLE HOUSING OVERHAUL	10
D.	REAR WHEEL BRAKE ASSEMBLY OVERHAUL	12
E.	DIFFERENTIAL AND DIFFERENTIAL LOCK ASSEMBLY OVERHAUL	13
F.	DRIVE PINION ASSEMBLY OVERHAUL	15
G.	BRAKE PEDAL LINKAGE AND CROSS-SHAFT	19
H.	DIFFERENTIAL LOCK LINKAGE	20

A. REAR AXLE — DESCRIPTION AND OPERATION

The rear axle contains the differential, brakes, final reduction gears, axle shafts and the differential lock, Figure 1.

Power from the transmission output shaft is transmitted to the pinion by the drive shaft coupling. The spiral bevel pinion is held by preloaded opposed taper roller bearings. The differential ring gear is bolted to the differential case and the drive from the case is transmitted through a conventional four pinion differential to two sun gear shafts which are splined into the side gears of the differential.

The differential lock sliding coupling is located on the splines of the differential side gear, Figure 2. The coupling has dog teeth which match with the dog teeth on the differential lock adaptor. The adaptor dog teeth are in constant mesh with similar teeth machined in the differential case.

The differential lock operating spring separates the sliding coupling and adaptor. Depressing the differential lock pedal moves the differential lock fork which forces the sliding coupling into mesh with the adaptor, thus locking the side gear to the differential housing.

A common supply of oil is used for lubricating the rear axle and differential assemblies. The differential ring gear and differential assembly is partly immersed in oil providing adequate lubrication for bearings and bushings.

In each rear axle assembly a shaft projects through the side gear. This shaft terminates in a spur gear which is the sun gear of the planetary reduction gear system. The planetary ring gear is pressed into the rear axle housing. The three planet gears are mounted in a carrier and are positioned around the sun gear and within the planetary ring gear, Figure 5.

The planet gears are mounted to the carrier by shafts and rotate on uncaged needle bearings. The carrier has internal splines into which the rear axle shaft locates. As the sun gear is driven by the differential, the planet gears are forced to revolve inside the stationary planetary ring gear and force the carrier to revolve at a lower speed than the sun gear.

The rear axle shaft is held in opposed taper roller bearings and the end play is adjusted by means of selective shims held under the retaining bolt. The shaft terminates in a flange to which the rear wheel is bolted, Figure 1.

PRINTED IN U.S.A.

PREVIEW - YOUFIXTHIS.COM

Download full manual at youfixthis.com

Chapter 3
COMPONENT OVERHAUL

Section		Page
A.	GENERAL	63
B.	STRUCTURAL MEMBERS	63
	1. LOADER LIFT ARMS	63
	2. BACKHOE BUCKET	64
	3. BACKHOE DIPSTICK – STANDARD	64
	4. BACKHOE DIPSTICK – EXTENDIBLE	65
	5. BACKHOE BOOM	67
	6. BACKHOE SWING POST	67
	7. BACKHOE MAINFRAME	68
C.	CYLINDERS	68
	1. LOADER CYLINDERS	69
	2. BACKHOE CYLINDERS	75
D.	CONTROL VALVES	86
	1. LOADER CONTROL VALVE	86
	2. BACKHOE MAIN CONTROL VALVE	90
	3. UNLOAD VALVE SYSTEM	96
E.	HYDRAULIC GEAR PUMP	100

Chapter 4
TROUBLE SHOOTING

Section		Page
A.	GENERAL	103
B.	LOADER	103
C.	BACKHOE	105
D.	HYDRAULIC PUMP	107

PREVIEW - YOUFIXTHIS.COM

Download full manual at youfixthis.com

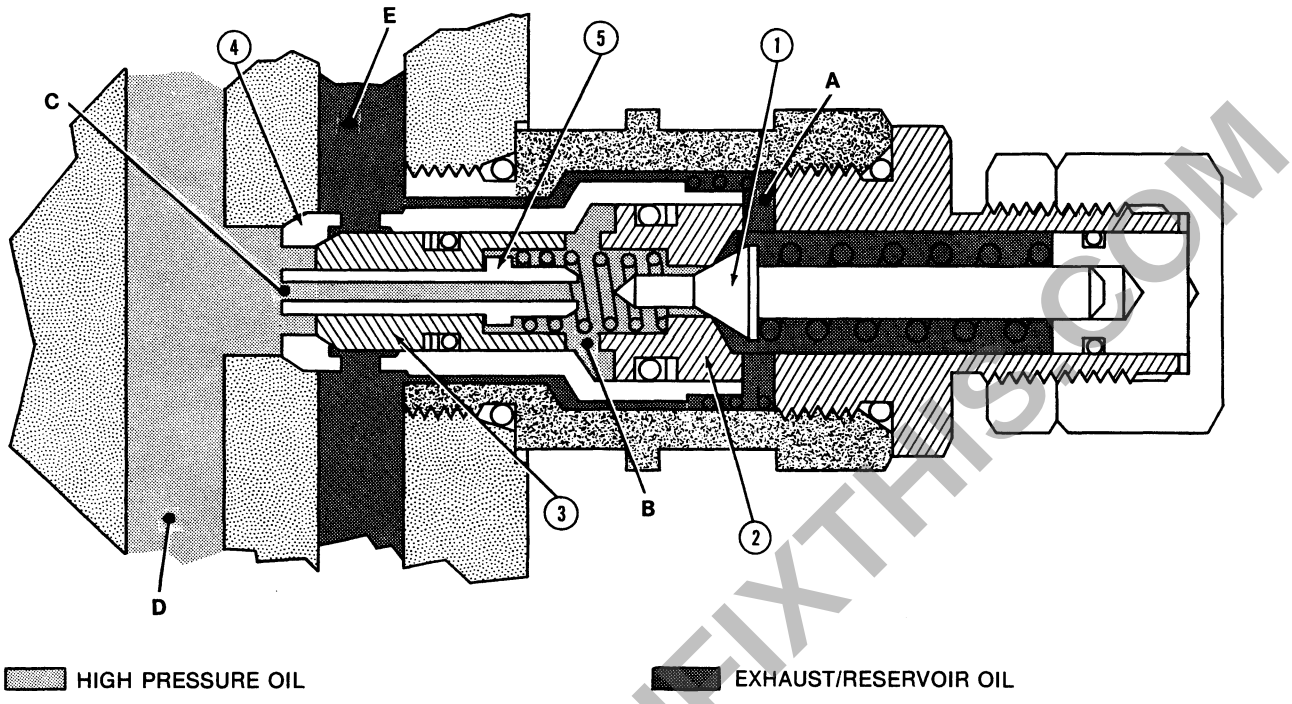

Figure 43
Circuit Relief Valve — Sectioned View Showing Valve not Subject to Overload Conditions

1. Pilot Valve
2. Pilot Valve Body
3. Poppet Valve
4. Sleeve Poppet
5. Piston

High pressure oil in area B can now flow past the pilot valve seat into the low pressure area A and on into the low pressure passage E. Oil flowing from behind the poppet valve (3), due to the opening of the pilot valve, lowers the pressure in that area and allows the piston (5) and poppet valve (3) to move toward the pilot valve and open the high pressure passage D to the low pressure passage E. The piston (5) seats against the pilot valve, Figure 45, and shuts off the flow of oil to the area behind the poppet valve so that pressure in that area remains low.

The outer poppet sleeve (4) remains seated, being held in this position by the spring.

NOTE: *The circuit relief valve described above is common to all circuit relief and system relief valves except the lift rod end circuit relief valve, Figure 46. However, it too functions in the same manner except that the sleeve poppet (9), Figure 46, uses an O-ring and back-up ring for sealing and not the tapered seat; therefore, it is not free to move.*

ANTI-CAVITATION — OPERATION
Reference — Figure 47

When the lift cylinder rod end circuit relief valve has operated, oil has been exhausted from the rod end of the cylinder causing the cylinder to extend and create a void in the piston end of the cylinder, as shown in Figure 47.

The void is automatically replenished by the anti-cavitation feature incorporated in the circuit relief valve installed in the cylinder piston end circuit.

Oil passage D, Figure 48, shows the void condition present in Figure 47. Passage E, Figure 48, has high pressure as a result of the operation of the circuit relief valve in the rod end circuit. Oil pressure in passage E acts on the poppet sleeve outer shoulder while at the same time the void or suction in passage D is sensed in area B. These forces cause the poppet sleeve to move off its seat against the light spring pressure and allows oil under the pressure in passage E to flow into passage D to replenish the void.

PREVIEW - YOUFIXTHIS.COM
Download full manual at youfixthis.com

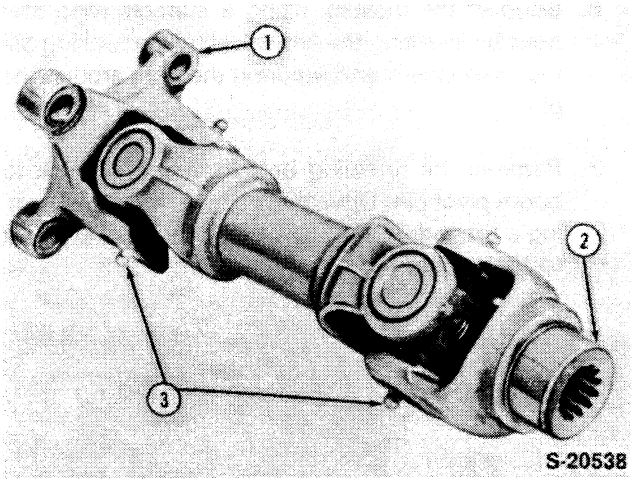

Figure 95
Drive Shaft Assembly

1. Coupling — Crankshaft Pulley
2. Splined Coupling — Pump End
3. Lube Fittings

During installation observe the following reqirements.

- Lubricate the universal joints using the correct grade lubricant. See "Specifications," Chapter 6 for correct lubricant.
- Fill the reservoir with the correct grade oil. See "Specifications," Chapter 6 for usage.
- Start and idle the tractor for several minutes and then recheck the oil level.

K. BACKHOE BUCKET

REMOVAL

1. Position the unit on a firm, level surface and rest the bucket on the ground.
2. Remove the two lynch pins that secure the attaching pins to the dipstick and bucket link, Figure 96. Withdraw the spacer from each pin.
3. Drive the attaching pins from the pivot holes using a brass drift and hammer and remove the bucket.

INSTALLATION

1. Position the bucket under the link and dipstick and install the attaching pins, spacers and lynch pins.
2. Lubricate the pin attaching the bucket to the dipstick. For correct grade of grease see "Specifications," Chapter 6.

NOTE: *Two bucket linkage positions are available as shown in Figure 96. Position (1) is suitable for the majority of backhoe operations as it provides greatest bucket power. Position (2) is best suited for straight wall operations as it provides maximum bucket rollout and curl. It also provides maximum clearance at full height but slightly reduces bucket tear-out power.*

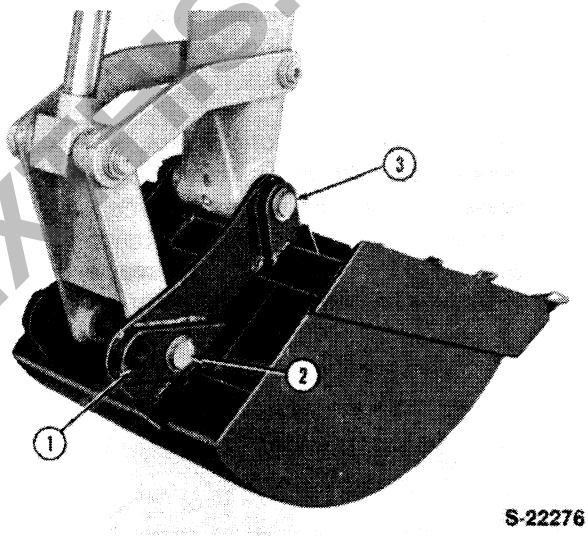

Figure 96
Backhoe Bucket Attaching Pins

1. Attaching Pin — Maximum Power Position
2. Maximum Rollout and Curl Pin Position
3. Dipstick to Bucket Attaching Pin

L. STANDARD DIPSTICK

REMOVAL
Reference — Figures 97 and 98

For ease of handling, remove the bucket prior to removing the dipstick.

1. Support the boom using the transport lock or a chain and hoist to remove the tension from the bucket end of the dipstick.
2. Remove the idler arm retaining pin from the dipstick, Figure 97.

PREVIEW - YOUFIXTHIS.COM

Download full manual at youfixthis.com

Oil flow out of the cylinder through this port forces the valve off its seat and all oil passes through and around the valve unrestricted.

Oil passages in the swing cylinder pressure ports are reduced in size to restrict the flow of oil and feather the movement of the swing cylinders.

The cylinder rod contains a sliding restrictor (6), Figure 147, that extends through the piston bolt and restricts the oil outlet port in the cylinder end plug (1), when the cylinder approaches the end of its travel on the retracting stroke.

DISASSEMBLY

1. Drain the oil from the cylinder by extending and retracting the cylinder rod with the cylinder ports open.

   Recap all ports.

2. Clean the cylinder externally so that the internal parts will not become contaminated.

3. Remove the locking screw (4) from the trunnion, Figure 148.

4. Remove the connector (12) and restrictor valve (11) from the trunnion, Figure 147.

5. Mount the trunnion piece in a large vise in such a way as to not damage the trunnion bushings.

   NOTE: *The cylinder barrel is threaded into the trunnion and locked with a screw. The end plug is threaded into the piston end of the barrel with sealant applied to the threads.*

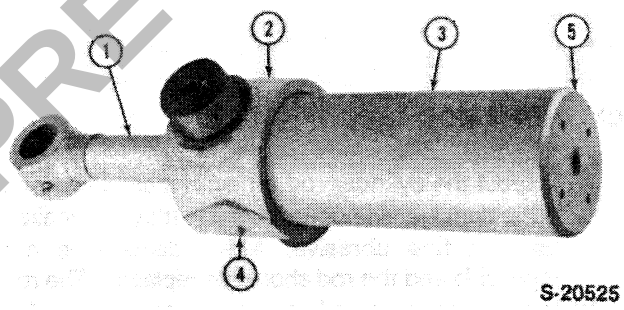

Figure 148
Swing Cylinder Disassembly

1. Cylinder Rod
2. Trunnion
3. Cylinder Barrel
4. Locking Screw
5. End Plug

6. Do not clamp the cylinder so as to distort the cylinder barrel. With the end plug in place, clamp the cylinder at the plug end so the tube is supported, and remove the trunnion.

   NOTE: *The threaded area is sealed. If heat is required to loosen, do not permit heat to penetrate onto the piston as this will damage the piston rings.*

7. Secure the cylinder rod and trunnion in a vise and using a deep well socket remove the piston retaining bolt and sliding restrictor assembly.

8. Remove the piston and slide the rod out of the trunnion.

BACKHOE SWING CYLINDERS — INSPECTION AND REPAIR

1. Thoroughly clean all parts in a suitable solvent and air dry or use a lint-free cloth.

2. Carefully inspect all components for nicks, burrs, or other damage.

PISTON ASSEMBLY

1. Remove the piston seal and rubber expander ring.

2. Inspect the wear rings for excessive wear and damage. These rings are not removable and if damaged will require replacing the piston assembly.

3. If the wear rings are in good condition and the piston is free of any major nicks, burrs or other damage, install a new rubber expander ring and teflon seal.

   When installing a new teflon seal first warm the seal in hot water to make it more pliable and easier to install without overstretching or damaging the seal.

   Reshape the seal once in place using a suitable ring compressor or solid hose clamp clamped around the seal to help shrink the seal in place, as shown Figure 141. Be sure the surface of the seal does not become damaged.

PREVIEW - YOUFIXTHIS.COM

Download full manual at youfixthis.com

Loader Only

1. Place the loader bucket on the ground, stop the engine and relieve all loader circuits of pressure by actuating the loader control lever in all directions.

2. Disconnect the loader bucket cylinder rod end hose and install "Tee" fitting, Tool No. 0840 and adapter Tool No. 0745. Connect the gauge and hose assembly, Tool Nos. 7099 and 2028, Figure 180.

3. Start the engine and operate the hydraulic system until the oil reaches normal operating temperature (about 165°F; 74°C).

4. Actuate the loader control lever to curl the bucket back. Hold the lever in this position and record the pressure reading with the engine running at 2100 rev/min.

5. If the pressure reading is below specifications (see Chapter 6), remove the system relief valve and cap, Figure 181. Add sufficient shims to raise the pressure to specifications. Shims of 0.010 in. (0.254 mm) and 0.025 in. (0.635 m) thickness are available. One 0.010 in. (0.254 mm) shim will increase the pressure by approximately 100 psi (7.0 bar). Recheck the pressure of each adjustment.

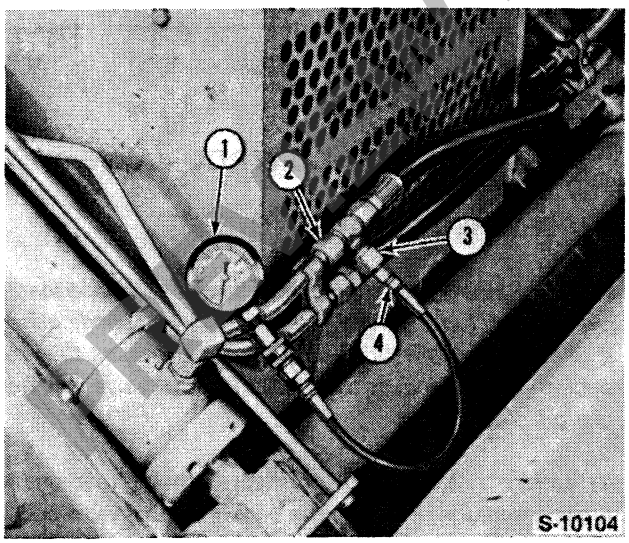

Figure 180
Loader System Relief Valve Pressure Check

1. Gauge, Tool No. 2028
2. Tee Fitting, Tool No. 0840
3. Adaptor, Tool No. 0745
4. Quick Coupler Hose, Tool No. 7099

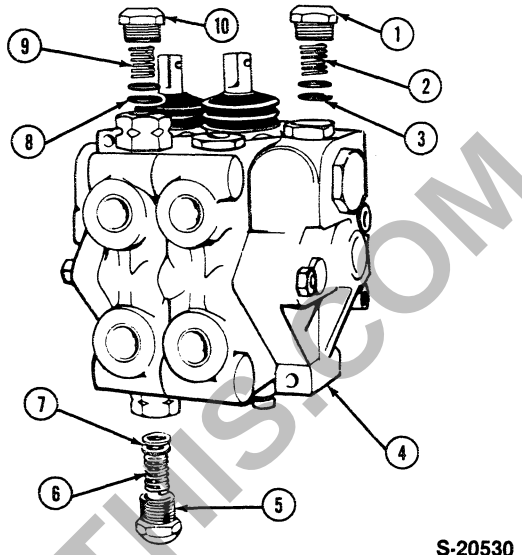

Figure 181
Loader Control Valve Assembly

1. Loader System Relief Valve End Cap
2. Spring
3. Shims
4. Loader Control Valve Assembly
5. Bucket Cylinder Piston End Circuit Relief Valve End Cap
6. Spring
7. Shims
8. Shims
9. Spring
10. Bucket Cylinder Rod End Circuit Relief Valve End Cap

Loader Circuit Relief Valve Tests

The location of the two circuit relief valves in the loader main control valve is shown in Figure 181. The bucket piston end circuit relief valve protects the bucket cylinder from overloads during grading operations while the unit is travelling rearwards. The bucket cylinder rod end circuit protects the bucket cylinder during arduous digging operations. If a hydraulically closed bucket is fitted, a third section is added to the control valve and contains a circuit relief valve.

The bucket piston end circuit relief valve has a pressure setting lower than the main system relief valve and can therefore be tested using system pressure. However, the rod end and the third section (where fitted) circuit relief valves are set at a higher pressure than the system relief valve and require an amplified pressure source. This is achieved by using the loader lift cylinder as a pressure amplifier.

Download full manual at youfixthis.com

PART 9
STEERING SYSTEM

Chapter 1
HYDROSTATIC STEERING SYSTEM

Section		Page
A.	HYDROSTATIC STEERING SYSTEM — DESCRIPTION AND OPERATION	1
B.	HYDROSTATIC STEERING SYSTEM — OVERHAUL	4

PREVIEW - YOUFIXTHIS.COM

A. HYDROSTATIC STEERING SYSTEM — DESCRIPTION AND OPERATION

DESCRIPTION

The Ford 455 tractor steering system is a hydraulic power assisted hydrostatic system. The major components are shown in Figure 1. The components are serviced separately and consist of a steering column shaft, a steering motor, a power steering pump, the cylinders, a front axle assembly, and the hoses and tubes required to connect the system.

The system is "closed," that is, the hydraulic oil is stored in the power steering oil reservoir, is pumped through the steering system, and returned to the reservoir. The reservoir and the power steering pump are an integral unit.

STEERING COLUMN SHAFT

The steering wheel is secured to the steering column shaft, Figure 2. The steering column shaft is protected by a steel outer tube. The lower end of the shaft is coupled to the power steering motor input shaft by a coupler and 2 pins.

Two retaining rings hold the pins in the coupler. The power steering motor and steering column assemby are bolted to the power steering motor support.

POWER STEERING PUMP AND RESERVOIR

The integral power steering pump and reservoir, Figure 3, are mounted on the engine front cover plate on the left side of the engine, Figure 3. The pump and reservoir are connected to the steering motor by two tubes.

PRINTED IN U.S.A.

Download full manual at youfixthis.com

PART 10
FRONT AXLE

Chapter 1
FRONT AXLE — TWO WHEEL DRIVE

Section		Page
A.	FRONT AXLE — DESCRIPTION AND OPERATION	1
B.	TOE-IN ADJUSTMENT	1
C.	COMPONENT OVERHAUL	2

PREVIEW - YOUFIXTHIS.COM

A. FRONT AXLE — DESCRIPTION AND OPERATION

The front axle, Figure 1, is tapered from the center to the ends and is slightly swept back. It is centrally mounted by two tapered pins through one long pin bore. The pins are inserted from the front.

The dual pin through one long bore gives strength and lateral rigidity to the axle and limits the axle end movement to a radial pivot around the pin axis.

Castings, machined to receive the wheel spindle pins, are welded to the ends of the axle. The wheel spindle assemblies are located on the spindle pins by means of bushings at the upper and lower ends.

A thrust bearing is located at the lower end of each spindle pin to support vertical thrust. The spindle pins and wheel spindle assemblies are held in place by a tapered locking pin through the axle castings and the spindle pins.

The steering arms are bolted to the outer surfaces of the wheel spindle assemblies. The steering arms are connected by means of a connecting rod. Steering cylinder rods are pivoted on the steering arms and the rear of the axle.

The front wheel track is 68 inches (1.727 mm) and is not adjustable.

B. TOE-IN ADJUSTMENT

The toe-in of the front wheels is set at the factory. Normally, the front wheels maintain their toe-in adjustment; however, an occasional check of the toe-in should be made after any front axle component overhaul.

Check for correct toe-in as follows:

1. Place the front wheels in a straight-ahead position. Determine the straight-ahead position by turning the steering wheel from lock-to-lock and then halfway back, or drive the tractor forward several feet and backward several feet in a straight line.

2. Measure and record the distance from the inside front rim of one wheel (not the tire) at hub height, to the inside front rim of the other wheel at hub height.

3. Measure and record the distance between the rear of the wheel rims at hub height.

PRINTED IN U.S.A.

Download full manual at youfixthis.com

3. Install the output shaft front bearing (3) and snap ring (2), Figure 59, on the shaft.

4. Install the output shaft gear (2), Figure 63, in the case with the lugs forward. Place a spacer washer on each side of the gear.

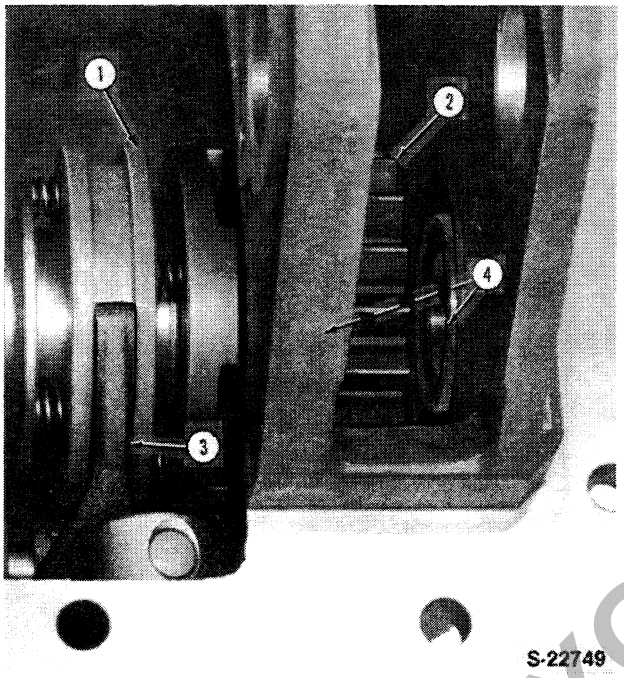

Figure 63
Shift Coupler and Output Shaft Gear Removal

1. Shift Coupler
2. Output Shaft Gear
3. Shift Fork
4. Spacer Washers

5. Install the shift couple (1), Figure 63, in the case on the shift fork with the lugs facing the gear lugs.

6. Install the output shaft through the front opening into the splines of the shift coupler, spacer, output shaft gear and rear spacer washer (be certain both spacer washers are in place) until the shaft is in line with the rear bearing.

7. Using a brass hammer gently drive the output shaft into the rear bearing and the shaft front bearing into the case. The front bearing should go into the case 21/32 inch, Figure 64. This allows room for the front cover flange.

8. Lube the output shaft, case, front cover seals and O-ring and gently slide the cover over the output shaft and into place in the case, Figure 65.

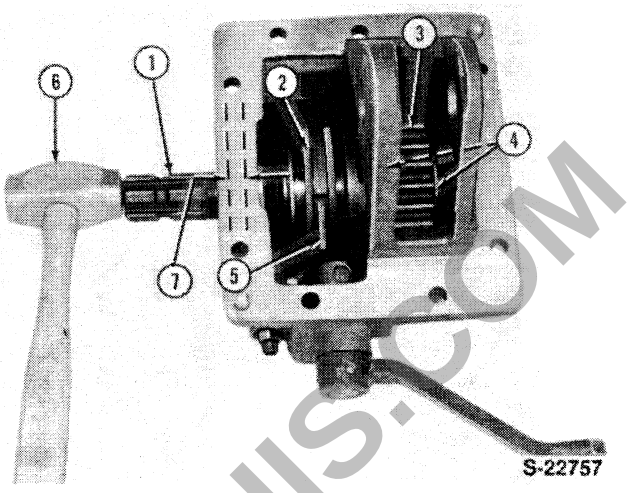

Figure 64
Output Shaft Installation

1. Output Shaft
2. Shift Coupler
3. Output Gear
4. Spacer Washers
5. Shift Fork
6. Brass Hammer
7. Front Bearing in Case 21/32 Inch

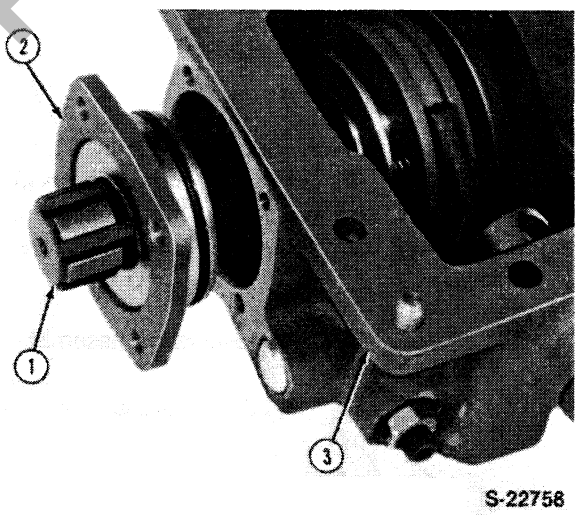

Figure 65
Front Cover Installation

1. Output Shaft
2. Front Cover
3. Transfer Case

9. Install the cover bolts (1) and guard bracket (2), Figure 66. Torque the bolts to 18 lbs. ft. (24 Nm). Turn the output shaft by hand and check for binding or interference between the shift coupler and shaft gear. Shift the coupler in and out of gear, make sure movement is free.

PREVIEW - YOUFIXTHIS.COM
Download full manual at youfixthis.com

PREVIEW ONLY

You're viewing 24 of 522 pages

The full manual includes:

- All 522 pages, complete
- Searchable PDF (find any keyword)
- No watermarks
- Instant download
- Print-ready quality

GET FULL MANUAL NOW

Ford 455 Repair Manual

Scan or click anywhere
youfixthis.com

Click anywhere on this page to get the full manual