2. CYLINDER HEAD, VALVES, AND RELATED PARTS

Cylinder Head

The cylinder head can be removed from the engine for service with the engine installed in the tractor. When removing the Ford 755 cylinder head, first remove the turbocharger. For instructions, see Chapter 2, Part 1.

A. Removal

1. Remove the vertical muffler, if so equipped, and disconnect the main wiring harness from the hood panel assembly. Remove the hood panel assembly.

2. Remove the air cleaner assembly and related components. Remove the radiator shell support. Disconnect the exhaust pipe from the exhaust manifold on units that are equipped with horizontal exhaust systems. Drain the radiator and cylinder block.

3. Bend the lock tabs back. Figure 2, and remove the bolts that secure the exhaust manifold to the cylinder head.

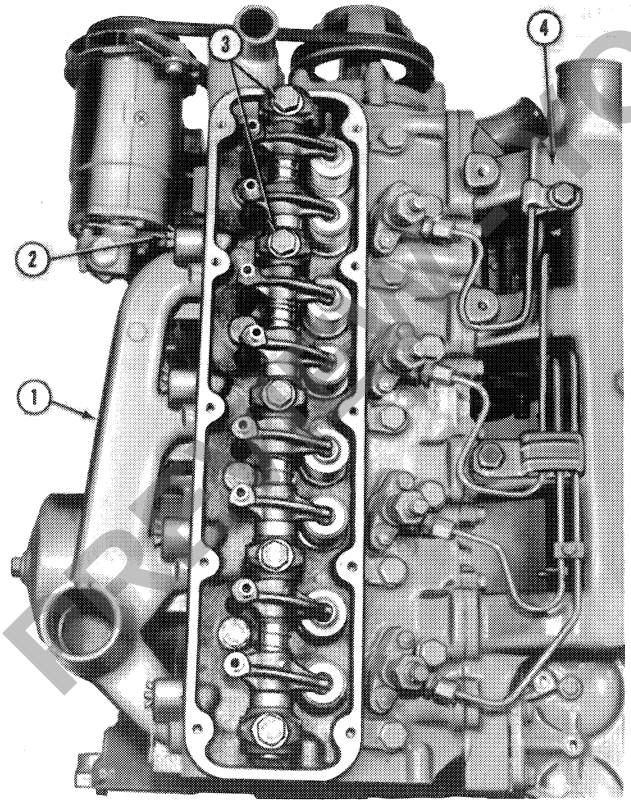

Figure 2
Engine with Rocker Arm Cover Removed

1. Exhaust Manifold
2. Lock Tabs
3. Rocker Arm Bolts
4. Intake Manifold

4. Remove the exhaust manifold and metal gasket, Figure 2.

5. Remove the injector lines from the injection pump and from the injectors. Cap the exposed openings in the pump and in the injectors, and all tube ends to prevent the entry of dirt.

6. Disconnect cold start equipment where equipped.

7. Disconnect the air inlet hose at the clamp at the intake manifold.

8. Remove the fuel filter from the manifold by disconnecting the fuel lines and removing two bolts and flat washers and cap the openings.

9. Remove the bolts and lock washers that retain the intake manifold, Figure 2, to the cylinder head and remove the manifold and gasket.

10. Disconnect the ventilation tube from the rocker cover. Remove the bolts that attach the rocker arm cover to the cylinder head and remove the rocker arm cover and gasket.

11. Disconnect the injector leak-off line. Remove the two nuts from the studs that retain each injector, Figure 3, and remove each injector from its bore in the cylinder head. Be sure the area surrounding the injectors is clean. If the injectors can not be readily pulled by hand, it may be necessary to pry the injectors out.

12. Visually check the push rods for straightness before they are removed by rotating them with the valve closed. Loosen the bolts that retain the rocker shaft to the cylinder head, Figure 2, evenly and alternately until all tension has been relieved, and lift the rocker shaft assembly from the cylinder head.

    NOTE: *The rocker shaft retaining bolts should be left in place in the rocker shaft supports during removal. The bolts hold the rocker shaft assembly together; therefore, only remove the bolts when it is necessary to disassemble the rocker shaft.*

13. Remove the valve push rods from their holes in the cylinder head and arrange them in a rack in the order in which they were removed.

14. Remove the remaining cylinder head attaching bolts and carefully lift the cylinder head from the block.

Download full manual at youfixthis.com

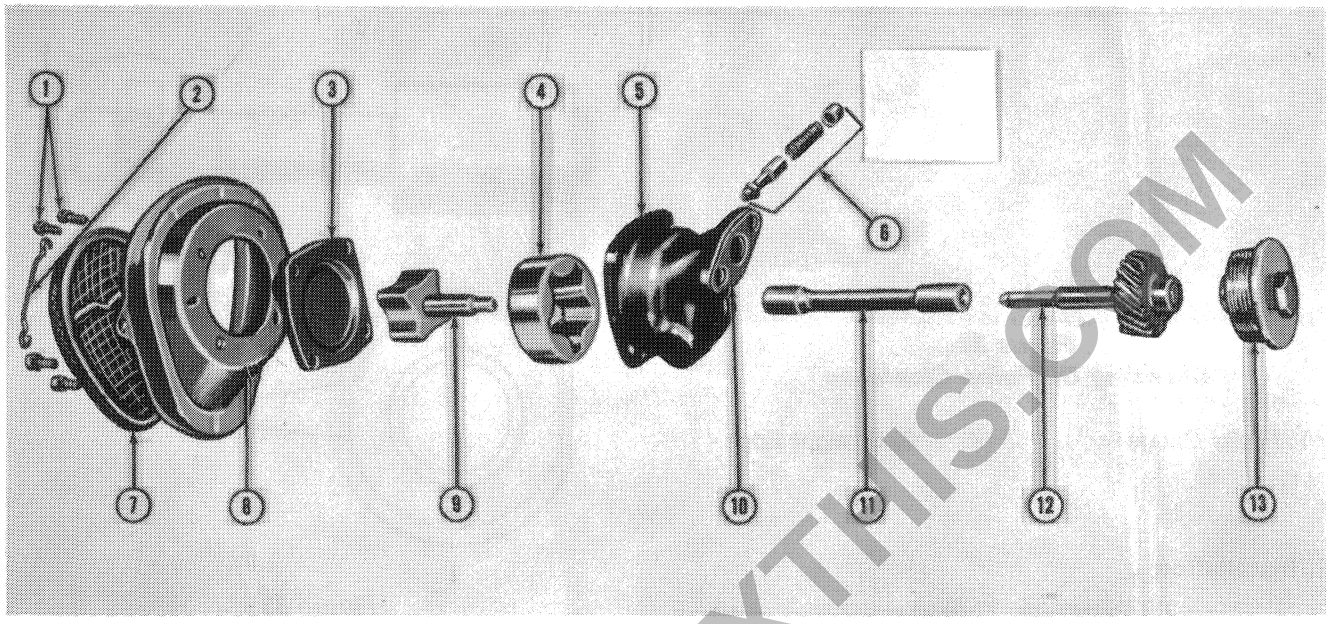

Figure 31
Oil Pump Disassembled

1. Retaining Bolts
2. Screen Spring
3. Pump Cover
4. Outer Rotor
5. Pump Housing
6. Relief Valve Assembly
7. Pump Screen
8. Screen Cover
9. Inner Rotor and Shaft Assembly
10. Gasket
11. Intermediate Shaft
12. Drive Gear and Shaft
13. Stop

NOTE: *The shaft and rotor are serviced only as an assembly.*

5. Measure the rotor-to-housing clearance by inserting feeler blades between the rotor and the housing. Take the measurements at four places, 90° apart. If the measurements are not within specifications, see page 80, install a new rotor assembly. Remeasure clearances with the new rotor assembly in the pump housing. If the measurements are still not within specifications install a new pump housing.

6. Check the relief valve spring tension. If the spring tension is not within specifications, page 80, install a new spring.

7. Check the relief valve for score marks and be sure it is free to move within the bore; the valve should have two flats on each side at the location shown in Figure 33.

8. Check the oil pump drive gear for worn or broken teeth. If any of these conditions exist install a new drive gear and shaft assembly.

9. Check the intermediate drive shaft to be sure the hexagon socket ends are not excessively worn.

D. Assembly

The oil pump assembly is shown in Figure 31.

1. Oil all the parts thoroughly.

2. Install the oil pressure relief valve piston and spring, and drive in a new plug.

3. Install the rotor and shaft and outer race into the pump body. The rotor and shaft assembly and outer race are serviced as an assembly. One part should not be replaced without replacing the other.

4. Install the pump cover and screen cover together and tighten the four cap screws to the specified torque, page 80.

5. Install the screen assembly and secure it with the screen spring.

PREVIEW - YOUFIXTHIS.COM

Download full manual at youfixthis.com

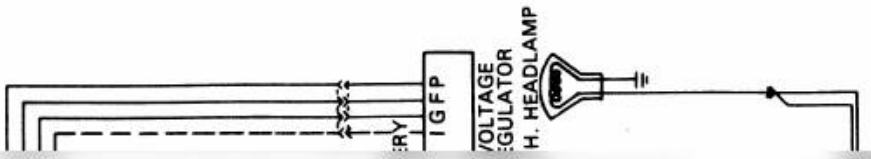

Blurred on purpose. The manual you buy has this page in full quality.

PREVIEW - YOUFIXTHIS.COM

Download full manual at youfixthis.com

3-SPEED POWER REVERSING TRANSMISSION



Blurred on purpose. The manual you buy has this page in full quality.

PREVIEW - YOUFIXTHIS.COM

Download full manual at youfixthis.com

Engine Oil Grade:

Consult the operator's manual for recommended oil types and viscosities.

PREVIEW - YOUFIXTHIS.COM

Blurred on purpose. The manual you buy has this page in full quality.

Download full manual at youfixthis.com

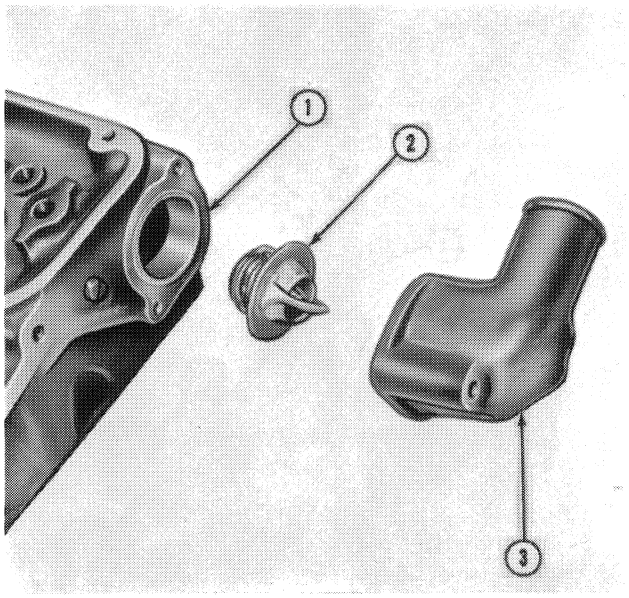

Figure 95
Location of Engine Thermostat

1. Gasket
2. Thermostat
3. Coolant Outlet Connection

B. Inspection

Place the thermostat in a container of water and heat the water. If the thermostat valve does not open at or near the thermostat opening temperature or if it fails to close, install a new thermostat.

C. Installation

1. Clean the coolant outlet connection and cylinder head or manifold surface. Coat a new coolant outlet connection gasket with sealer. Postion the gasket on the cylinder head, or manifold.

   NOTE: *The gasket must be positioned on the cylinder head or manifold before the thermostat is installed.*

2. Coat the edge of the thermostat with grease so it will stick in the water outlet connection.
3. Position the thermostat in the recess of the water outlet connection so that the heat element will be in the cylinder head.
4. Position the water outlet connection and install the retaining bolts. Be careful not to disturb the thermostat.
5. Fill the radiator and operate the engine. Check for coolant leaks.

3. WATER PUMP

A. Removal

1. Drain the cooling system.
2. Remove the radiator as outlined on page 66. "A. Radiator Removal."
3. Loosen the generator adjusting arm bolt and the two generator pivot bolts and relax the tension on the belt.
4. Remove the four water pump attaching bolts and remove the water pump and gasket.

B. Disassembly

1. Remove the four attaching bolts and remove the fan from the pump pulley.
2. Using Puller No. 9539 and a sleeve slightly smaller than the pulley shaft, remove the pump pulley from the shaft, as shown in Figure 96.
3. Remove the four bolts that retain the front and rear covers of the pump housing together. Separate the pump covers and discard the gasket.
4. Using an arbor press with a piece of pipe or a sleeve of 1 in. (25.4 mm) I.D. and 1-1/8 in. (28.6 mm) O.D. over the shaft and positioned on the outer case of the bearing, press the bearing assembly, shaft and impeller out of the pump housing, as shown in Figure 86.
5. Support the flat side of the impeller between two blocks and press the shaft assembly by using a sleeve slightly smaller than the shaft.
6. Remove the seal from the shaft. Discard the seal.

C. Inspection and Repair

1. Check the impeller for worn or damaged vanes and check the seal seat on the rear face of the impeller to be sure it is in good condition. Install a new impeller if the seat or vanes are damaged.
2. Check the individual parts of the bearing shaft and slinger assembly for nicks, scores, or other damage, and the slinger for correct position on the shaft, Figure 97. If the bearing and shaft are undamaged and the slinger is damaged or incorrectly positioned, remove it using care not to damage the shaft.

PREVIEW - YOUFIXTHIS.COM

Download full manual at youfixthis.com

Part 1

ENGINES

Chapter 1

ENGINES AND LUBRICATION SYSTEM

Section		Page
1.	Description and Operation	1
2.	Cylinder Head, Valves, and Related Parts	4
3.	Engine Front Cover and Timing Gears	12
4.	Oil Pan Sump and Oil Pump	17
5.	Connecting Rods, Bearings, Pistons, Rings, and Cylinder Block	20
6.	Balancer, Main Bearings, Flywheel, and Crankshaft	30
7.	Camshaft	39

Chapter 2

TURBOCHARGERS — AIR RESEARCH

Section		Page
1.	Description and Operation	43
2.	Turbocharger Overhaul	45
3.	Trouble Shooting	60

SCHWITZER

Section		Page
1.	Description and Operation	52
2.	Turbocharger Overhaul	53
3.	Trouble Shooting	60

PREVIEW - YOUFIXTHIS.COM

Download full manual at youfixthis.com

Chapter 3

COOLING SYSTEM

Section		Page
1.	Description and Operation	65
2.	Radiator and Thermostat	66
3.	Water Pump	67

Chapter 4

TROUBLE SHOOTING, SPECIFICATIONS, AND SPECIAL TOOLS

Section		Page
1.	Trouble Shooting	71
2.	Specifications	73
3.	Special Tools	81

PREVIEW - YOUFIXTHIS.COM

Download full manual at youfixthis.com

5. Position the drive gear on the front of the camshaft, making sure the timing mark is lined up, and secure with the washer and bolts. Tighten the bolts to the specified torque, page 80. Check the camshaft end play as outlined on page 39, under "REMOVAl," Step 6.

6. Position a new O-Ring and install the hydraulic pump drive gear cover plate. Tap the cover with a soft hammer to be sure it is seated. If the cover does not fit tight, install a new one.

7. Install the oil pan sump as outlined on page 18, "OIL PAN SUMP INSTALLATION."

8. Install the retaining cap at the rear of the block over the end of the camshaft.

9. Install the engine rear cover plate.

10. Install the engine front cover, as outlined on page 17, "FRONT COVER INSTALLATION."

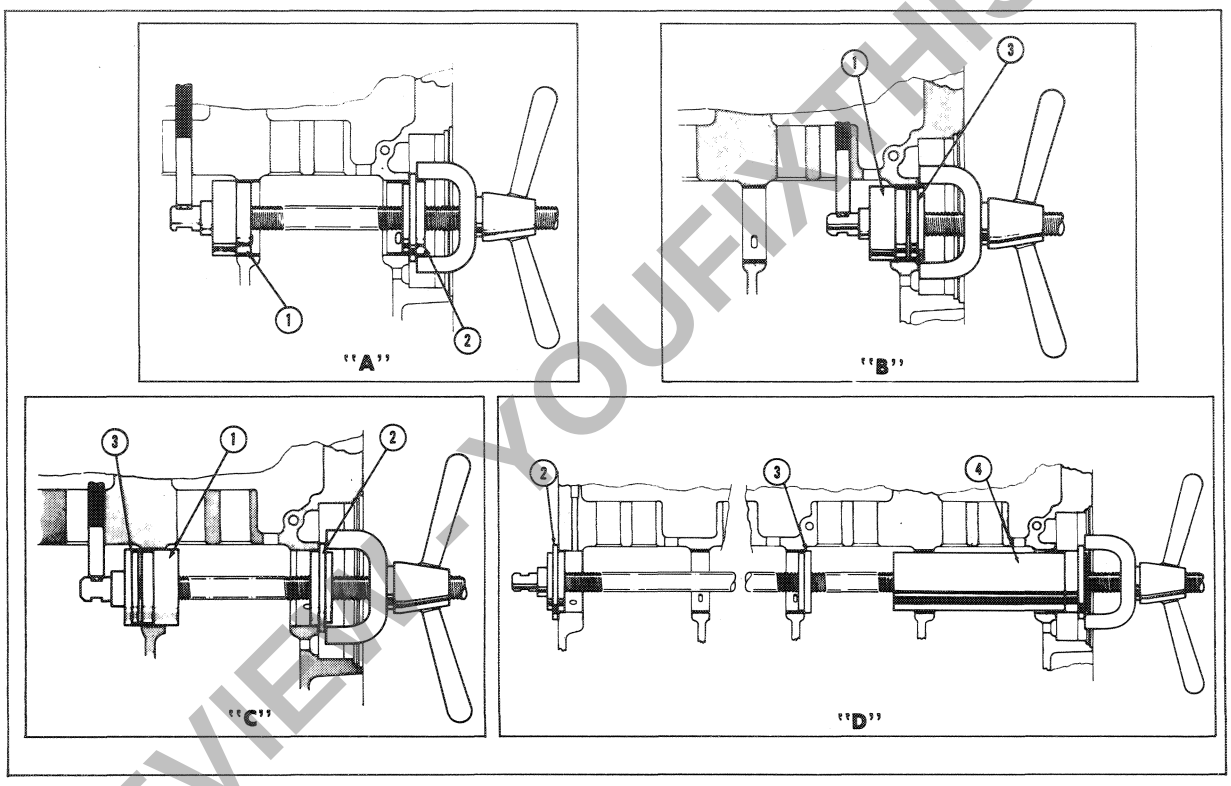

Figure 69
Removing and Installing Camshaft Bearing with Tool 1255 Remover and Replace

PREVIEW - YOUFIXTHIS.COM

Download full manual at youfixthis.com

Part 2

FUEL SYSTEM

Chapter 1

DIESEL FUEL SYSTEM - FORD 755

Section		Page
1.	Description and Operation	1-2
2.	Adjustments	3-4
3.	Air Cleaner	4
4.	Fuel Tank, Fuel Lines, and Fuel Filters	5
5.	Fuel Lift Pump	6-7
6.	Fuel Injection Pump	7

PREVIEW - YOUFIXTHIS.COM

1. DESCRIPTION AND OPERATION

Air Cleaner

The Ford 755 air cleaner has a dual element filter, consisting of a primary element and a secondary element. The filter is located in back of the radiator shell. Refer to Section 3, "AIR CLEANER" for removal and installation instructions.

Fuel Tank

The fuel tank is attached to the right-hand sub-frame, out board of the frame, Figure 1. Fuel is added through a vented cap on a filler tube at the top of the tank. The fuel tank outlet is in the top of the tank and consists of a pick-up tube and a filter screen.

Fuel Filter and Lines

The Ford 755 uses a single diesel fuel filter. Fuel flows from the fuel tank to the fuel lift pump where it is pressurized to 2-3 psi (13.79-20.68 kPa). The fuel then flows, under pressure, through the filter to the injection pump.

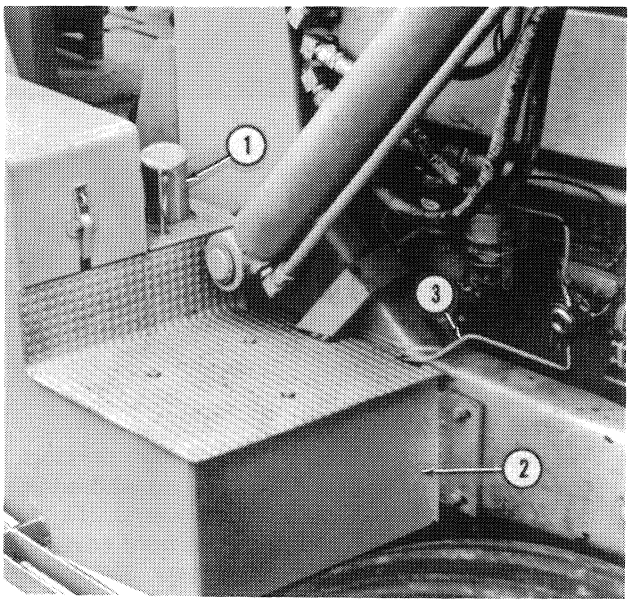

Figure 1
Fuel Tank

1. Filler Neck
2. Fuel Tank
3. Fuel Line

Download full manual at youfixthis.com

Two diode assemblies, Figure 24, one positive and one negative each consisting of three diodes mounted in a metal plate are used to rectify the alternating current to direct current. The plate, a heat-sink (2) dissipates heat away from the diodes and also serves as a conductor for the diodes. One end of each of the three stator windings is connected to the three positive diodes and the other ends of the windings are connected to the negative diodes. Two studs on each diode assembly attach the assembly to the rear housing. One stud on the positive diode assembly is the alternator regulator terminal and the other is the output terminal. The output terminal is part of the field diode (2). The positive diode assembly is insulated from the rear housing. The negative diode assembly is not insulated and the upper stud is the alternator ground connection.

The battery cut-out function is accomplished by the use of high capacity diodes in the positive diode plate assembly.

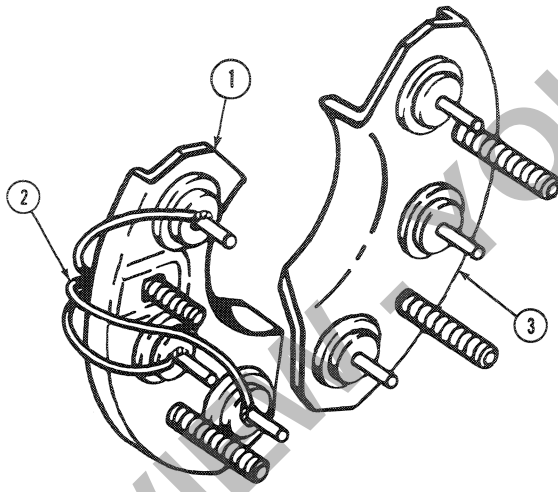

Figure 24
Diode Assemblies

1. Positive Diode Assembly
2. Field Diode
3. Negative Diode Assembly

REGULATOR

The regulator is an electronic switching device that senses the voltage at the alternator auxiliary terminal and supplies the necessary current to the rotor coil to maintain system voltage at the output terminal. The components of the regulator are hermetically sealed for protection against damage from vibration, dust and moisture, and therefore, cannot be adjusted or repaired. A system of diodes, transistors and calibrating resistors regulate the field current to the rotor coil and adjust the regulating system for temperature changes.

There is no cut-out system or current regulating system in the regulator. The high capacity positive diode assembly functions as the charging system cut-out. The alternator is so designed that it is self-current limiting. When the maximum current output is reached, it cannot be increased with a further increase in rotor speed.

With the key start switch off and the alternator stopped, no current flows through the charging system and no battery current is available to energize the rotor field coil.

When the key start switch is turned to the "on" position and the engine is stopped, current flows to and through the regulator to the rotor field coil creating a magnetic field at the rotor fingers. Because the rotor is still stationary, no current is generated in the stator.

When the engine is running and the rotor is turning inside the stator, the magnetic lines of force at the pole piece fingers are cut by the stator windings inducing an alternating current in the windings. The regulator senses voltage output at the auxiliary terminal of the alternator. The rotor field is switched on and off electronically by the system of diodes and transistors in the regulator to maintain the correct current and voltage output. This switching action takes place several hundred times per second.

3. IN-VEHICLE TESTS

PRELIMINARY CHECKS

Prior to electrical testing, a thorough inspection of the charging and electrical system is required to eliminate associated conditions that may be interpreted as a defective alternator or regulator.

1. Check all electrical leads and connections, repair or replace necessary parts. Check the condition of the alternator drive belt and pulleys. Severe operating conditions will accelerate belt and pulley wear. Tighten the belt to avoid slippage during testing.

PREVIEW - YOUFIXTHIS.COM

Download full manual at youfixthis.com

PREVIEW - YOUFIXTHIS.COM

Download full manual at youfixthis.com

Part 5

REAR AXLE AND BRAKES

Chapter 1

REAR AXLE AND BRAKES

Section		Page
1.	Description and Operation	1-2
2.	Adjustments	2-4
3.	Overhaul Rear Axle Shaft Assembly	5-8
4.	Overhaul Planetary Gear Assembly and Axle Housing	9-11
5.	Overhaul Disc Brake Assembly	12
6.	Overhaul Differential and Differential Lock Assembly	12-15
7.	Overhaul Parking Brake Assembly	15-17
8.	Overhaul Drive Pinion Assembly	18-20
9.	Overhal Brake Pedals and Linkage	20

Chapter 2

SPECIFICATIONS AND SPECIAL TOOLS

Section		Page
1.	Specifications	21-22
2.	Special Tools	22-23

PREVIEW - YOUFIXTHIS.COM

Download full manual at youfixthis.com

3-SPEED POWER REVERSING TRANSMISSION

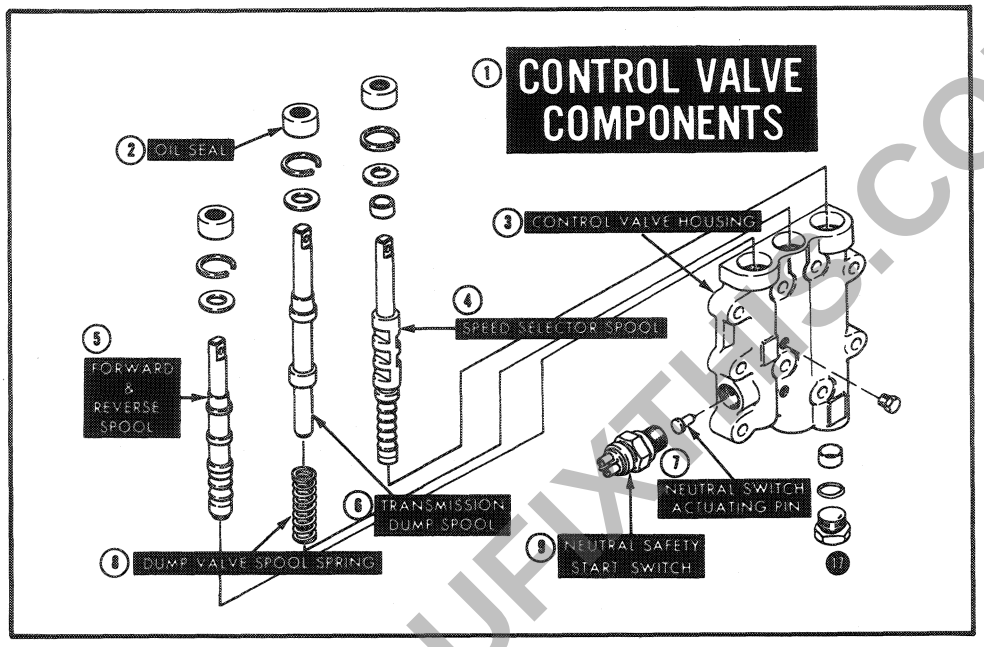

SLIDE 17

The control valve consists of a three-speed control valve housing, a forward and reverse spool, transmission dump spool, speed selector spool and the direction neutral safety start switch.

A neutral safety start switch is located in the forward and reverse bore. The switch is in the closed position when the forward and reverse spool is positioned in neutral. This means that the internal points in the switch are in contact and the engine may be started. When the spool is in either the forward or reverse position, the switch points are open and the engine can not be started.

PREVIEW - YOUFIXTHIS.COM

Download full manual at youfixthis.com

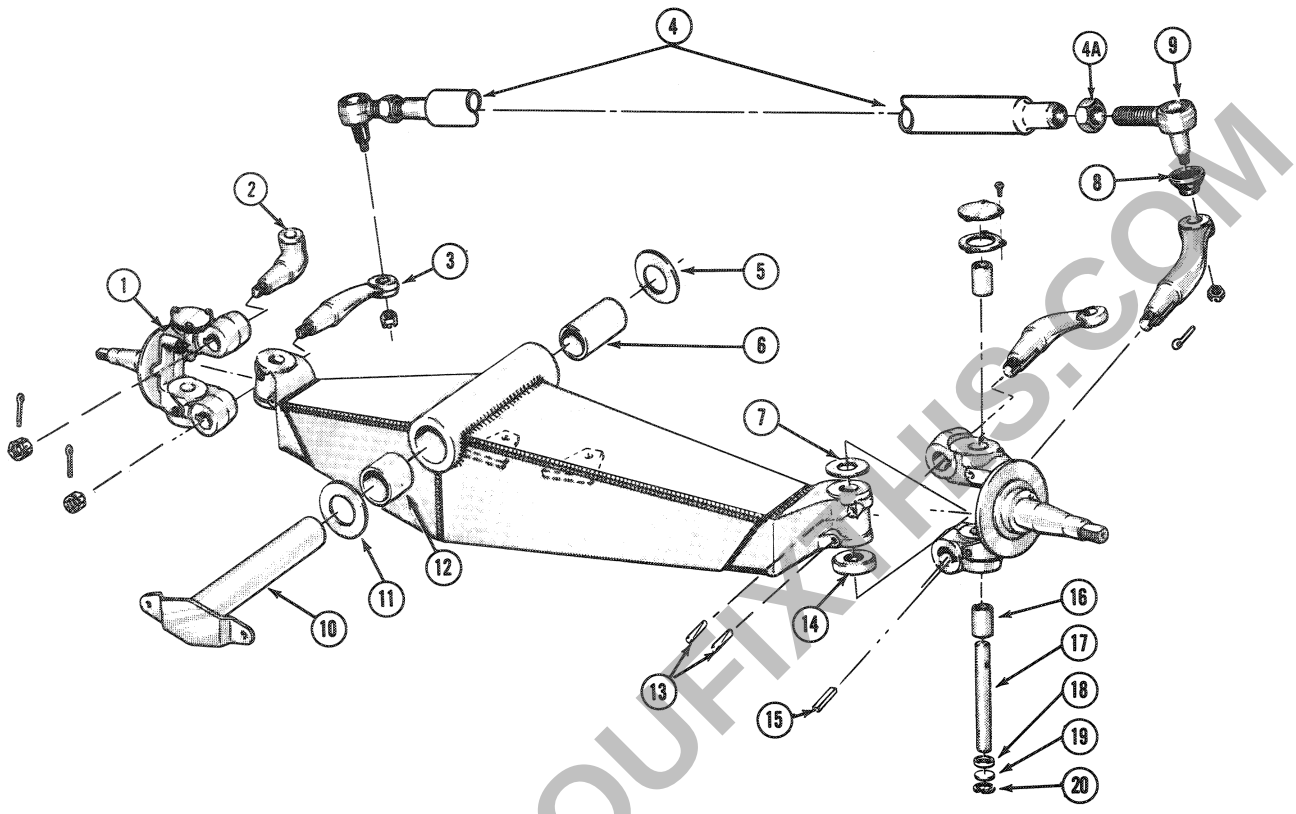

Figure 28
Front Axle Assembly

1. R.H. Spindle Assembly
2. Spindle Steering Cylinder Arm
3. Spindle Connecting Rod Arm
4. Connecting Rod
5. Thrust Washer
6. Rear Bushing
7. Shim
8. Dust Cover
9. Rod End Assembly
10. Axle Pin
11. Thrust Washer
12. Front Bushing
13. Lock Pins
14. Thrust Bearing
15. Lock Key
16. Bushing
17. Spindle Pin
18. Spacer
19. Plug
20. Snap Ring

2. With the front wheels in the straight-ahead position, mark the front of the wheel rims (not the tires) at wheel hub height.

3. Measure and record the distance between the front of the wheels at the marks on the wheels.

4. Move the unit forward or rearward until the marks are at wheel hub height at the rear of the wheels.

5. Measure and record the distance between the rear of the wheels at the marks. This dimension should be 1/8 in. (3.17 mm) to 1/4 in. (6.35 mm) greater than the dimension recorded in Step 3.

If the toe-in is not correct, adjust as follows:

1. Loosen the jam nut on each end of the connecting rod sleeves, Figure 29.

2. Rotate the connecting rod sleeve in the required direction until the rear of the rims, measured at hub height, are 1/8-1/4 in. (3.17-6.35 mm) further apart than the front of the rims.

3. After the correct toe-in is obtained, tighten the connecting rod jam nuts to a torque of 175-200 lbs. ft. (237.1-271.0 Nm).

PREVIEW - YOUFIXTHIS.COM
Download full manual at youfixthis.com

also directed to the backhoe lift control valve. The entire 44 gpm output if the hydraulic pump is directed to the backhoe lift control valve for maximum power.

The oil from the backhoe lift control valve joins with the loader control valve return oil and passes through the oil cooler. When the oil is cooled, it passes through the filter and returns to the reservoir.

HOSES AND TUBING

All high pressure hoses are of two-spiral-wire-one-wire braid or two wire braid, rubber-coated construction with 37° flared fittings. Most high pressure tubing is steel incorporating 37° flared fittings, the remainder are compression fittings. The twelve hoses used on the loader are the same length and diameter, making them a common part.

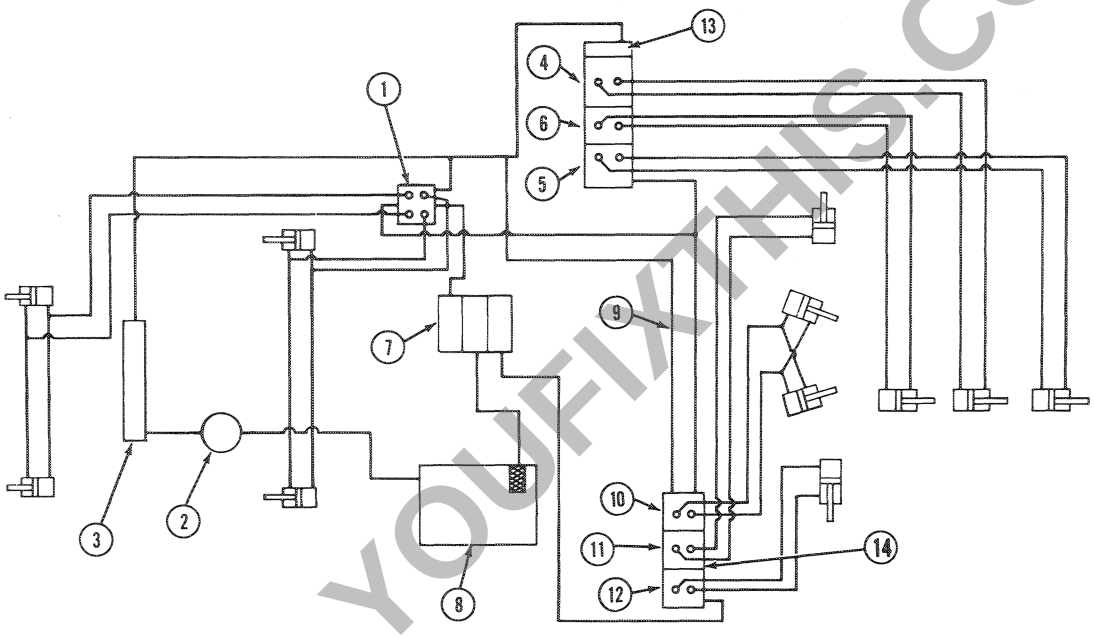

Figure 13
Hydraulic System Schematic

1. Loader Control Valve
2. Oil Filter
3. Hydraulic Oil Cooler
4. Backhoe Crowd Section
5. Bucket Section
6. Lift Section
7. Hydraulic Pump
8. Reservoir
9. Return to Sump Line
10. Backhoe Swing Section
11. Left Stabilizer Section
12. Right Stabilizer Section
13. Lift Control Valve
14. Swing Control Valve

BACKHOE LIFT CONTROL VALVE (PRIOR VALVE)

The backhoe lift control valve, Figure 14, is a three-section, stacked-type control valve consisting of three valve sections and two end covers. The valve sections are identified as the crowd, lift and bucket sections. Each section of the control valve contains two interchangeable circuit relief valve assemblies which, provided they are set to the proper pressure, are also interchangeable between sections of the valve. Each section of the valve is serviced separately.

The spools are of high carbon, chrome-plated, and polished steel. Each spool is selectively fitted to the body spool bore and therefore, these parts are not interchangeable or serviced separately.

The system relief valve, Figure 16, located in the inlet end cover, serves to protect the backhoe components from damage by preventing excessive internal pressures in the backhoe system. The system relief valve is adjustable to increase or decrease system pressure by means of a screw-type adjustment.

PREVIEW - YOUFIXTHIS.COM
Download full manual at youfixthis.com

5. CYLINDERS

BACKHOE AND LOADER CYLINDERS

A. REMOVAL

Cylinders should be removed from the backhoe and loader for service. Whenever possible, the packing nuts, glands, and gland nuts should be loosened before the cylinders are removed for service, since the pivot pins provide the best method of holding the cylinders while leverage is being applied. On backhoe cylinders, always loosen the packing nut first, and then the gland or gland nut.

NOTE: *The location of the swing cylinders does not allow access to the packing nuts and glands; therefore, they must be loosened after the cylinders have been removed.*

Figure 79 and 80 illustrates the tools that may be used to loosen the packing nuts, glands, and gland nuts. It is suggested that a length of pipe be placed over the tools handle for added leverage. If difficulty is encountered while loosening the nuts, shock loads, such as developed by a hammer and punch, may be used.

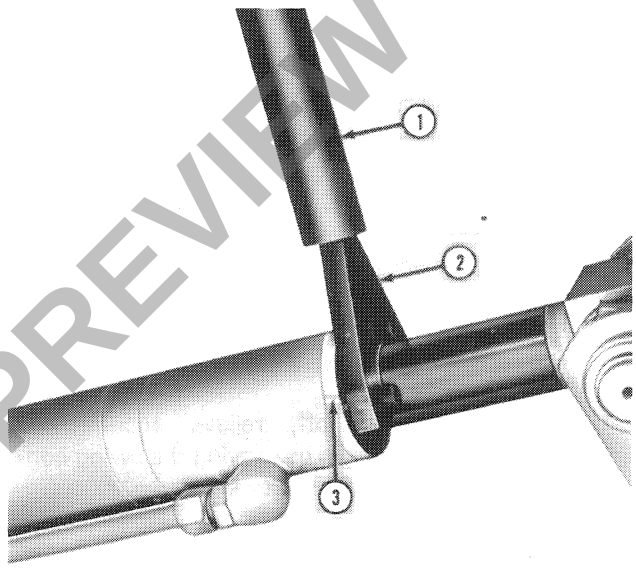

Figure 79
Lift and Crowd Cylinder Gland Removal
1. Pipe
2. Spanner Wrench — Tool No. 7351
3. Gland

NOTE: *Sealant (Locktite) is used on all threaded glands, gland nuts, and packing nuts of the backhoe cylinder. The application of heat (approximately 300° F) (148.9° C), will soften the sealant and make removal easier. Whenever heat is applied, new packings and rod wipers must be installed.*

Removal of all cylinders used on the backhoe and loader is basically the same. Where differences exist, specific information is presented for each.

CAUTION: *Do not remove cylinders from the backhoe without first providing ample support for the structural members. The loader cylinders should be removed with the bottom of the loader bucket resting on a flat surface.*

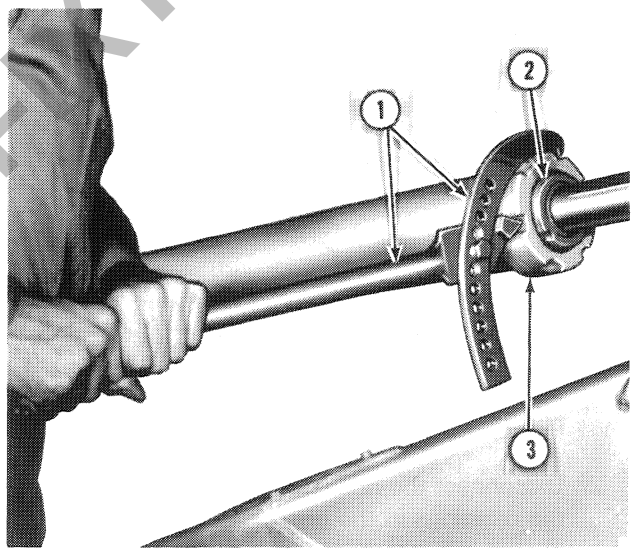

Figure 80
Packing Nut and Gland Nut Removal
1. Tool No. 9500
2. Packing Nut
3. Gland Nut

LOADER AND BACKHOE BUCKET, LIFT, CROWD, AND STABILIZER CYLINDERS

The backhoe and loader bucket, lift, and crowd cylinders are secured to the loader and backhoe with pivot pins at each end that are held in place with flat washers and retainer rings. Some of the rings incorporate holes while others do not. Figure 81, illustrates the tools that may be used for retainer ring removal. The piston end of each stabilizer cylinder is attached to the frame with a pivot pin that is in turn secured with a snap ring and washer. See Figure 78.

PREVIEW - YOUFIXTHIS.COM
Download full manual at youfixthis.com

3. Install the control tower cover.

   IMPORTANT: *The control tower covers are interchangeable, therefore it is important that the right cover be reinstalled (if both are removed at the same time on the correct control tower.*

The control lever(s) position in relation to the operator may also be adjusted as follows:

1. Loosen the control lever locknut, (3) Figure 142 and rotate the lever(s) to the most comfortable position for easy reach and movement.

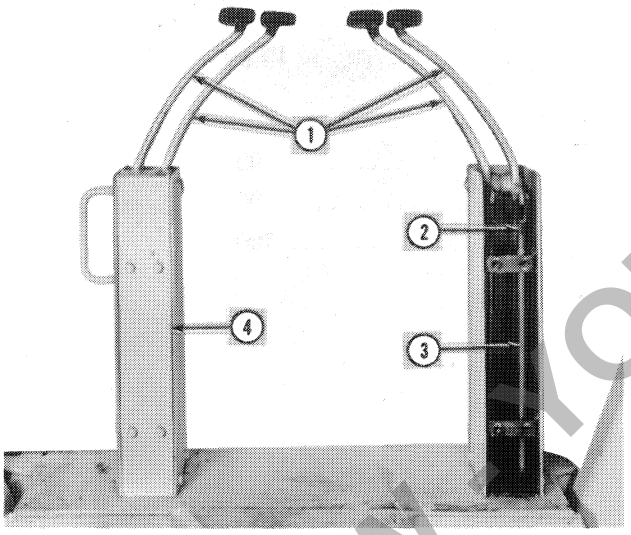

Figure 141
Backhoe Control Levers

1. Backhoe Control Levers
2. Clevis
3. Rod
4. Cover

   NOTE: *Control tower covers do not have to be removed to make this adjustment.*

   Make sure the lever(s) have enough clearance for side-to-side movement.

   Make sure the lever(s) action (side-to-side) has clearance for full movement without making contact with each other in the move to center or ROPS post-cab sides when moved outward.

2. When the most convenient position is located without interference hold the lever in that position and tighten the locknut securely.

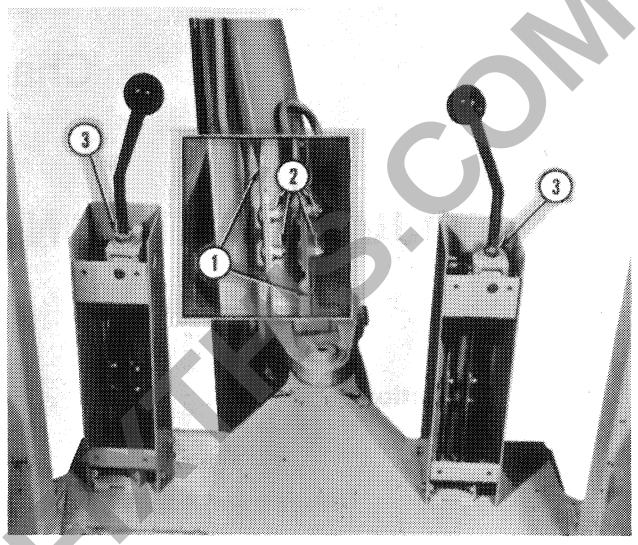

Figure 142
2 Lever Control Towers

1. Control Lever Linkage
2. Linkage Adjustment Stove Bolts, Flat Washers, Lock Washers and Hex Nuts
3. Control Lever Locknut

LOADER BUCKET LEVEL INDICATOR

The bucket level indicator, Figure 144, should be positioned so the pointer is centered over the reflective tape on the quadrant when the bucket and tractor are on a level surface. To check and adjust the indicator:

1. Position the tractor on a level surface and lower the bucket to ground level.

2. Position the bucket so the bottom is on a level plane with the front and rear tires.

3. If adjustment is necessary, separate the clevis, Figure 144, from the indicator pointer assembly by removing the cotter pin and clevis pin.

4. Turn the clevis as required so the pointer will be centered over the reflective tape when the clevis pin is installed.

5. Install the clevis pin and cotter pin.

PREVIEW YOUFIXTHIS.COM
Download full manual at youfixthis.com

PREVIEW ONLY

You're viewing 18 of 476 pages

The full manual includes:

- All 476 pages, complete
- Searchable PDF (find any keyword)
- No watermarks
- Instant download
- Print-ready quality

GET FULL MANUAL NOW

Ford 755, 755A, 755B Service Manual

Scan or click anywhere
youfixthis.com

Click anywhere on this page to get the full manual