2. CYLINDER HEAD ASSEMBLY - OVERHAUL

REMOVAL

1. Remove the muffler components.
2. Disconnect the air intake tube and on turbocharged engines:
   (a) Disconnect and remove the air cleaner-to-turbocharger tube.
   (b) Disconnect the oil pressure and return lines at the turbocharger and the engine, remove and cap the ends.
   (c) Remove the turbocharger complete, and cover all parts to prevent entry of dirt.
3. Drain the engine coolant and disconnect the top radiator-to-engine hose.
4. Remove the exhaust manifold.
5. Remove the injector lines and cap all openings in the pump, injectors and lines.
6. Remove the fuel inlet line from the fuel lift pump.

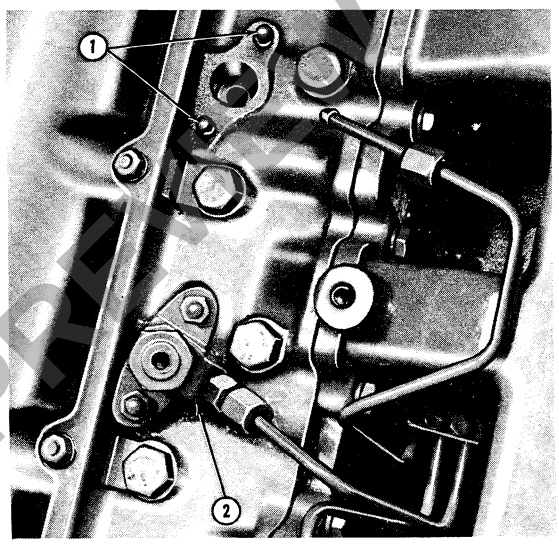

Figure 2
Injector Removal
1. Injector Mounting Studs
2. Injector

7. Remove the intake manifold.
8. Remove the ventilation tube from the rocker cover and remove the cover and gasket.
9. Disconnect the injector leak-off pipe and remove the injector and washers, Figure 2. Keep the injector area clean. Cap the openings and protect the nozzle tips.
10. Before removing the push rods, visually check for straightness by rotating each rod with the valve closed. Replace any push rod found to be defective. Loosen the rocker shaft retaining bolts in the cylinder head evenly and alternately until all tension has been relieved. Then remove the head.

    NOTE: The rocker shaft retaining bolts should be left in the rocker shaft supports during removal. The bolts hold the assembly together; only remove the bolts when it is necessary to disassemble the rocker shaft completely.

11. Remove the valve push rods and place in a rack in the order in which they were removed, so the rods may be installed in the same bores and along with the same tappets during reassembly.

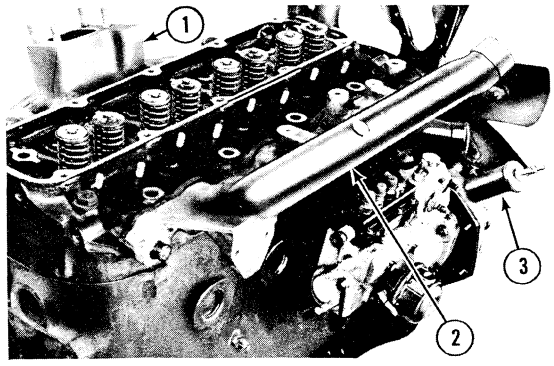

Figure 3
4-Cylinder Diesel Engine
With Valve Cover Removed
1. Intake Manifold
2. Exhaust Manifold
3. Engine Oil Filler Tube

PREVIEW - YOUFIXTHIS.COM
Download full manual at youfixthis.com

TORQUE SPECIFICATIONS (Lubricated Threads)	Thread Size	Pounds/ Feet	Kilogram / Metres
Main Bearing Bolts	9/16–12	115–125	15.88–17.26
Connecting Rod Nuts	7/16–20	60–65	8.29–8.98
Cylinder Head Bolts (with Engine Cold)	1/2–13	105–115	14.50–15.88

PREVIEW - YOUFIXTHIS.COM

Blurred on purpose. The manual you buy has this page in full quality.

Download full manual at youfixthis.com



Blurred on purpose. The manual you buy has this page in full quality.

PREVIEW - YOUFIXTHIS.COM

Download full manual at youfixthis.com

3. SPECIAL TOOLS

TOOL NO.	DESCRIPTION
[illegible]	[illegible]
[illegible]	[illegible]
[illegible]	[illegible]
[illegible]	[illegible]
[illegible]	[illegible]
[illegible]	[illegible]
[illegible]	[illegible]
[illegible]	[illegible]
[illegible]	[illegible]
[illegible]	[illegible]
[illegible]	[illegible]
[illegible]	[illegible]
[illegible]	[illegible]
[illegible]	[illegible]
[illegible]	[illegible]

Blurred on purpose. The manual you buy has this page in full quality.

PREVIEW - YOUFIXTHIS.COM

Download full manual at youfixthis.com

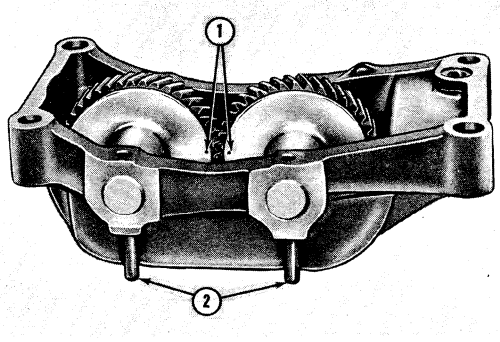

Figure 29
Balancer Timing Marks and Roll Pins
1. Timing Marks
2. Roll Pins

5. CRANKSHAFT: Remove the flywheel, engine rear cover plate, crankshaft pulley and engine front cover. Remove main bearing caps and crankshaft.

DISASSEMBLY

1. BALANCER: Drive out the roll pins securing the shafts to the housing, Figure 29, and disassemble the balancer as shown in Figure 30.

2. PISTON AND CONNECTING ROD: Remove the piston pin retainer (snap ring). Slide the piston pin out and remove the piston. Keep the piston and connecting rod together if these are to be reassembled, Figure 31.

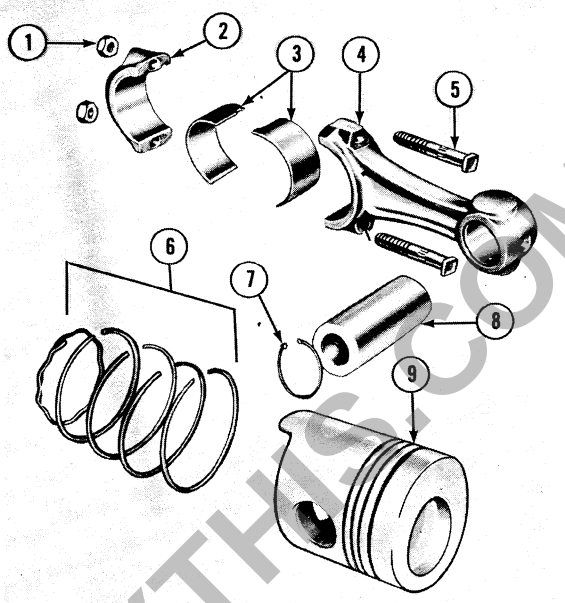

Figure 31
Piston and Connecting Rod Assembly
1. Nut
2. Cap
3. Bearings
4. Connecting Rod
5. Bolt
6. Piston Rings
7. Pin Retainer
8. Piston Pin
9. Piston

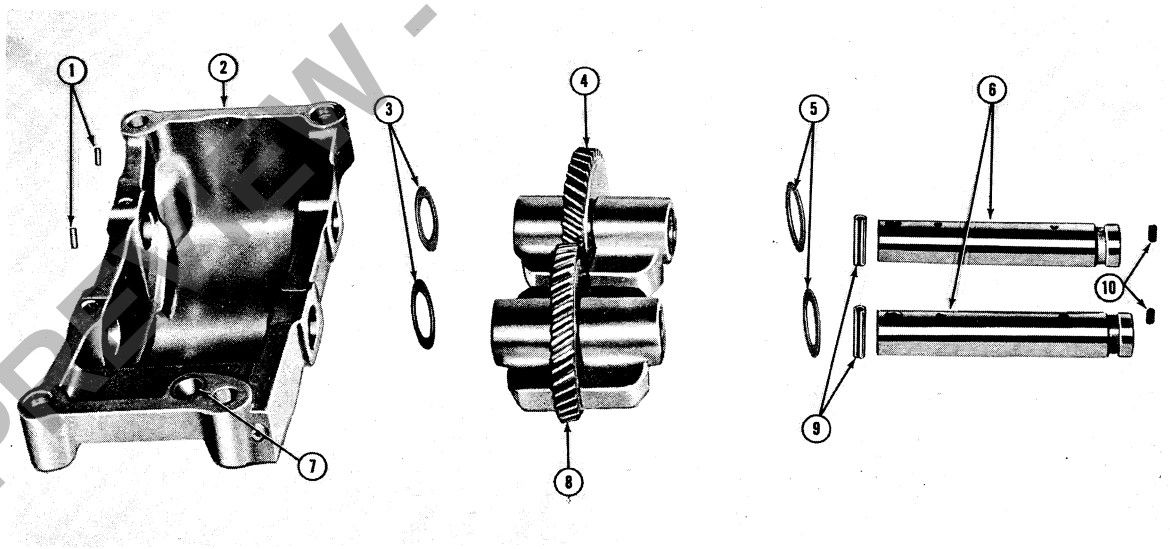

Figure 30
Balancer Disassembled
1. Roll Pins
2. Housing
3. Thrust Washers
4. Driven Gear
5. Thrust Washers
6. Shafts
7. Gasket
8. Drive Gear
9. Roll Pins
10. Allen Screws

PREVIEW - YOUFIXTHIS.COM
Download full manual at youfixthis.com

PART 1
ENGINE SYSTEM

Chapter 4
TROUBLE SHOOTING , SPECIFICATIONS AND SPECIAL TOOLS

Section		Page
1.	TROUBLE SHOOTING	43
2.	SPECIFICATIONS	47
3.	SPECIAL TOOLS	56

1. TROUBLE SHOOTING

PROBLEM	POSSIBLE CAUSES	REMEDY
Engine does not develop full power	1. Clogged air cleaner	Clean or renew element
	2. Fuel line obstructed	Clean
	3. Faulty injectors	Clean and reset
	4. Low cylinder compression	Replace piston rings or rebore/resleeve as necessary
	5. Incorrect valve lash adjustment	Check and reset
	6. Burnt, worn or sticking valves	Replace valves and/or guides
	7. Blown head gasket	Check head straightness and fit new gasket
	8. Incorrect fuel delivery	Check injectors and pump
Engine knocks	1. Diluted or thin oil	Drain and refill with specified oil and replace filter. Ascertain cause of dilution
	2. Insufficient oil supply	Check oil level and top up as necessary. Overhaul or replace pump as necessary
		Check pump filter to be sure it is not clogged
	3. Low oil pressure	Overhaul pump or relief valve as necessary
	4. Excessive crankshaft end play	Install new thrust bearing liner
	5. Flywheel or ring gear runout exesssive	Skim flywheel or fit new ring gear

PREVIEW - YOUFIXTHIS.COM

Download full manual at youfixthis.com

2. SPECIFICATIONS

ENGINE

Blurred on purpose. The manual you buy has this page in full quality.

PREVIEW - YOUFIXTHIS.COM

Download full manual at youfixthis.com

PART 1
ENGINE SYSTEM

Chapter 1
ENGINE

Section		Page
1.	DESCRIPTION AND OPERATION	1
2.	CYLINDER HEAD ASSEMBLY – OVERHAUL	4
3.	TIMING GEARS, CAMSHAFT AND OIL PUMP – OVERHAUL	11
4.	BALANCER, CONNECTING ROD AND PISTON, BEARINGS, FLYWHEEL AND CRANKSHAFT – OVERHAUL	15
5.	BLOCK ASSEMBLY – OVERHAUL	24

Chapter 2
COOLING SYSTEM

Section		Page
1.	DESCRIPTION AND OPERATION	29
2.	OVERHAUL	30

Chapter 3
TURBOCHARGER

Section		Page
1.	DESCRIPTION AND OPERATION	35
2.	OVERHAUL	37

Chapter 4
TROUBLE SHOOTING , SPECIFICATIONS AND SPECIAL TOOLS

Section		Page
1.	TROUBLE SHOOTING	43
2.	SPECIFICATIONS	47
3.	SPECIAL TOOLS	56

Printed In U.S.A. – 3/75

PREVIEW - YOUFIXTHIS.COM

Download full manual at youfixthis.com

2. OVERHAUL

REMOVAL

1. Remove the exhaust flange and seal ring.

2. Disconnect the air cleaner to turbocharger tube, and the turbocharger to the intake manifold tube.

3. Disconnect the oil supply and return tube and remove the return tube gasket, Figure 70, from the turbocharger. Cap the ends of the tubes and the openings.

4. Remove the turbocharger and the gasket between the turbocharger mounting flange and the exhaust manifold.

   IMPORTANT: **Prevent foreign material from entering the exhaust system, as this could damage the high speed turbine blades.**

DISASSEMBLY

1. Mark the relative positions of the compressor cover, the bearing housing and the turbine housing, Figure 71, and remove the lock washers, clamp plates and cover.

   NOTE: The bolts are of a special design. Do not replace the bolts with a different type as no substitute will be satisfactory.

2. Remove the clamp band and the core assembly, Figure 72.

   NOTE: If the core assembly is seized in the turbine housing, hold the core assembly and drive the housing down and away from the core. Do not hammer on the bearing housing or the hub of the turbine wheel.

3. Clamp a 5/8 in. boxed wrench in a vise as shown in Figure 72. Place the hub nut of the turbine wheel in the box end wrench.

4. Remove the turbine wheel shaft assembly and bearing. Identify the compressor end of the bearing so that it may be installed in the same position during assembly.

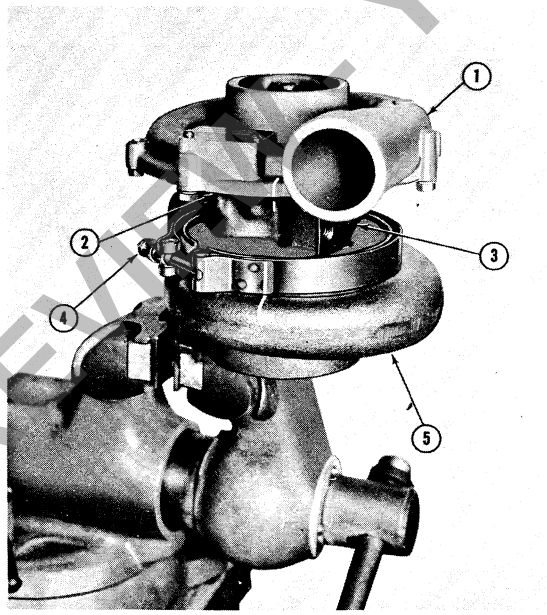

Figure 71
Turbocharger Disassembly

1. Compressor Cover
2. Clamp Plate
3. Bearing Housing
4. Clamp Band
5. Turbine Housing

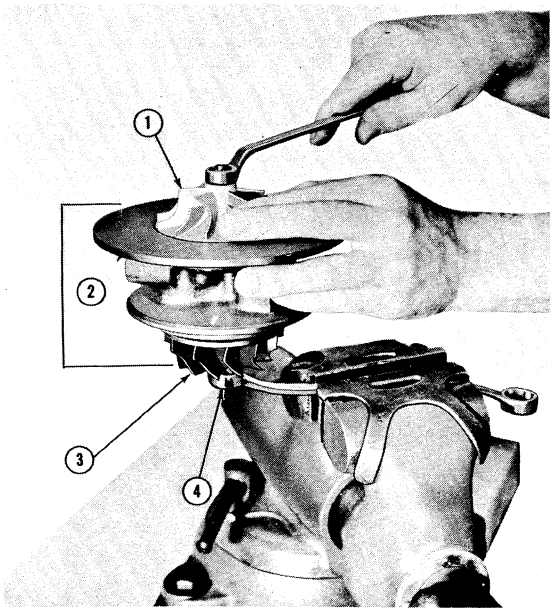

Figure 72
Compressor Wheel Removal

1. Compressor Wheel
2. Core Assembly
3. Turbine Wheel and Shaft Ass'y.
4. 5/8 in. Box End Wrench

PREVIEW YOUFIXTHIS.COM
Download full manual at youfixthis.com

As engine speed increases, the centrifugal force produced by the rotation of the governor weights also increases, causing the weights to move outward along the inclined slots in the carrier. As the weights are prevented from moving rearwards by the back plate the resultant reaction causes the carrier, thrust bearing and thrust pad to move forward along the camshaft, against the action of the governor main control spring. The pump control rod, which is linked to the thrust pad through the rocking lever, moves toward the minimum fuel position producing a corresponding reduction in engine speed. A corresponding reduction in centrifugal force at the governor weights is produced until a balance is achieved between the governor main control spring and the reaction force from the weights, which restores the engine speed to the original level.

Conversely, when a reduction in engine speed occurs, the force applied by the governor control spring will exceed the centrifugal force produced by the weights and the pump control rod will move toward the maximum fuel delivery position until the position of balance is again achieved and the engine speed is restored to the original level.

The excess fuel and stop device is enclosed within the pump body. Excess fuel is provided by depressing a knob on the outside of the pump body. This knob is connected to an internal stop lever which is normally interposed between a fork on the control rod and the maximum fuel stop screw. Depressing the knob moves the maximum fuel stop lever to one side and allows the control rod to move further rearward and provide fuel in excess of normal requirements.

A baulk spring is connected to the fork which, while allowing excess fuel to be supplied with the engine stopped, prevents the control rod from being moved to the excess fuel position while the engine is running.

To start the engine, open the throttle to tension the governor main control spring and move the thrust pad, governor weight carrier and control rod forward to the maximum fuel position, or excess fuel position if the excess fuel device is operated maximum fuel position, or excess fuel position if the excess fuel device is operated.

The stop control is operated by an external lever connected to the internal stop lever, adjacent to the maximum stop lever. The stop lever acts on the control rod fork to move the control rod to the "no delivery" or "stop" position.

2. FUEL INJECTION PUMP- OVERHAUL

DELIVERY VALVE AND GUIDE

Replacement of a delivery valve and guide and/or spring, which can be accomplished with the injection pump in place, should only be carried out in an emergency as the characteristics of the new parts may slightly alter fuel delivery from the element concerned. The pump calibration should be checked as soon as possible after installation of the new parts. The delivery valve and guide are a matched assembly and should only be installed as a pair.

A. REMOVAL

1. Remove the injector line from the delivery valve retainer of the element concerned. Loosen the delivery valve retainer clamp screw and remove the retaining clamp assembly. Unscrew the delivery valve retainer, using Tool No. CT9054 or N–5447, and extract the volume reducer, delivery valve spring and delivery valve.

PREVIEW - YOUFIXTHIS.COM
Download full manual at youfixthis.com

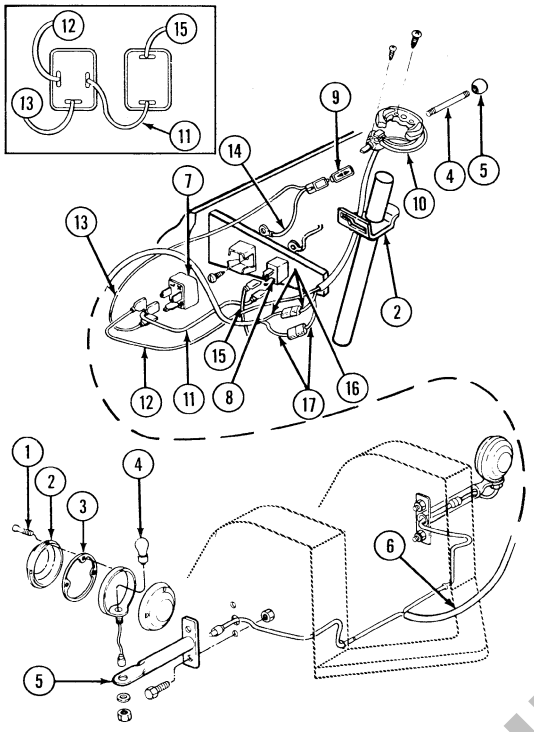

Figure 16
Turn Signal and Hazard Warning Lights

1. Lens Screws (6)
2. Lens (2)
3. Lens Gasket (2)
4. Bulb
5. Extension
6. Turn Signal Harness
7. Signal Relay
8. Relay Circuit Breaker — 6 Amp.
9. Turn Indicator Lamp Assembly
10. Turn Signal and Hazard Light Switch Assembly
11. Circuit Breaker "Aux" Terminal to Relay Terminal "X"—Blue/Red
12. Switch to Relay Terminal "L"—Blue/Red
13. Indicator Lamp to Relay Terminal "P"—Blue/Red
14. Indicator Lamp to Ground on Instrument Panel — Black
15. Main Harness Accessory Wire from Circuit Breaker No. 1 "Bat" Terminal — Yellow
16. Switch and Harness to Right Turn Light—White/Blue
17. Switch and Harness to Left Turn Signal — Yellow/Blue

INSTALLATION

1. Pass the three wires down through the shift lever lower cover and align the switch assembly on the bracket with the hazard light switch to the front of the loader. Install the four screws.
2. Connect the three wires to the harness and the relay, Figure 16, and operate and turn signal and warning light switches to check for proper operation of the system.
3. Install the shift lever, cover and steering wheel.

RELAY AND CIRCUIT BREAKER ASSEMBLY

Procedures for removal and installation are the same as for circuit breakers above. See Figure 16 for wire connections.

INDICATOR LIGHT ASSEMBLY

See Instrument Panel and Instruments Section.

WARNING LIGHT BULB ASSEMBLY

To replace a bulb, remove the three screws that attach the lens to the lamp body. Remove the lens and gasket. Remove the bulb from the socket and insert a new bulb. Attach the lens and gasket with the three screws.

3. INSTRUMENT PANEL, INSTRUMENTS AND SENDERS

A. INSTRUMENT PANEL

The instrument panel is enclosed by a cover assembly which contains a door that covers the components on the upper area of the panel and is locked with a key. Two high-impact plastic windows cover each group of three gauges (Figure 17).

The instrument panel contains the engine coolant temperature and oil pressure gauges, ammeter, fuel gauge and the transmission oil pressure and temperature gauges. Each gauge is electrically operated and connects to its own sender and is individually lighted.

PREVIEW - YOUFIXTHIS.COM
Download full manual at youfixthis.com

ALTERNATOR BENCH CHECK

1. Mount the alternator in a test fixture capable of providing 3000 to 4000 alternator rpm.

2. Set the drive motor rotation to clockwise.

3. Connect the circuit leads as shown in Figure 79.

   NOTE: The ammeter shown is the panel ammeter of the test fixture, although a separate ammeter will serve the same purpose.

4. Switch the ammeter to show possible discharge during the hook-up. Reverse the meter for the output test.

5. Set the field rheostat to the maximum resistance before connecting it to the system.

6. Start the drive motor and adjust it to obtain 3000 to 4000 alternator rpm.

7. Reduce the resistance of the field rheostat, the alternator should begin to charge.

8. Continue to reduce the rheostat resistance until the alternator reaches its rated output. DO NOT operate the alternator for more than a few minutes in this manner, due to lack of voltage control. If the alternator delivers rated current output, terminate the test.

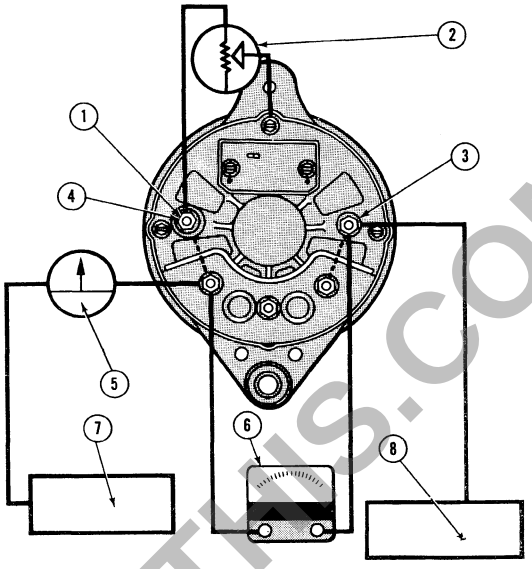

Figure 79
Alternator Operating Test (Less Regulator)

1. Terminals Connected with Dotted Line Have Same Polarity and Function
2. Field Rheostat
3. Negative Output
4. Auxiliary
5. Ammeter
6. Test Voltmeter
7. Battery Positive
8. Battery Negative

If rated output cannot be obtained, the rotor, stator, or diodes are at fault. Refer to the "In-Vehicle Tests" outlined previously in this Chapter.

PREVIEW - YOUFIXTHIS.COM

Download full manual at youfixthis.com

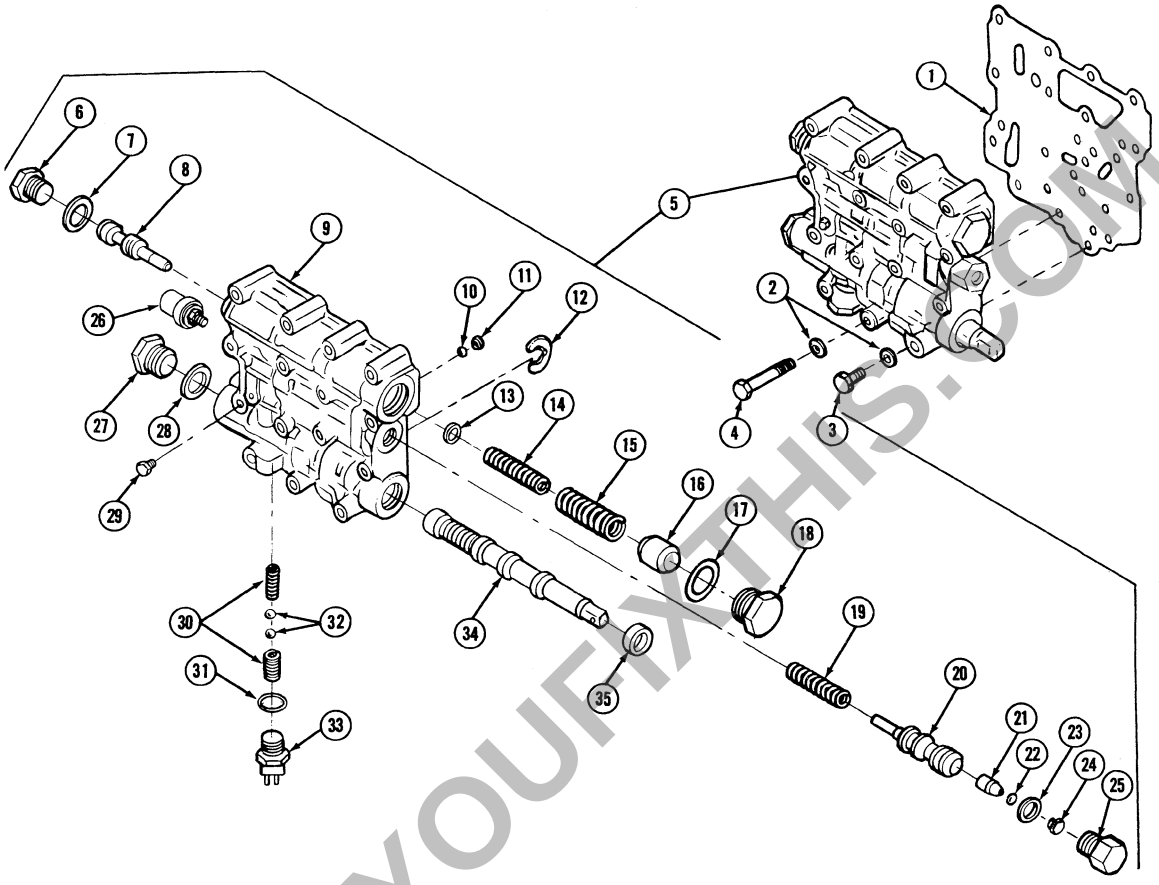

Figure 4
Control Valve Assemblies – Exploded View

1. Control Valve Body Gasket
2. Lockwasher, 3/8 (16)
3. Bolt, 3/8-16 x 1
4. Bolt, 3/8-16 x 2-1/2 (15)
5. Control Valve Body Assembly
6. Plug
7. Gasket
8. Main Pressure Regulator Valve
9. Control Valve Body
10. Ball
11. Ball Retainer Plug
12. Valve Stop
13. Spring Retainer
14. Main Pressure Regulator Spring
15. Trimmer Spring
16. Trimmer Valve
17. Gasket
18. Plug
19. Clutch Cutoff Valve Spring
20. Clutch Cutoff Valve
21. Cutoff Valve Plug
22. Sealring
23. Gasket
24. Cup
25. Retainer Plug (Hydraulic Actuated)
26. Oil Pressure Sender Assembly
27. Plug
28. Gasket
29. Plug
30. Detent Spring (2)
31. Gasket
32. Detent Ball (2)
33. Neutral Safety Start Switch
34. Manual Range Selector Valve
35. Oil Seal

PREVIEW - YOUFIXTHIS.COM

Download full manual at youfixthis.com

4. Remove the cable retainer and the gasket. Remove the valve plug. Remove the clutch cut-off valve and valve spring from the control valve body.

5. Remove the neutral safety start switch and gasket, and remove one spring and ball. At the inner (mounting) side of the control valve body, remove the valve stop from its position on the range selector valve.

6. Insert a bolt through the linkage pin hole in the selector valve. Pull the selector valve and seal from the bore and remove them from the control valve body. Remove the seal from the selector valve. Remove the remaining detent ball and spring which were freed during removal of the selector valve.

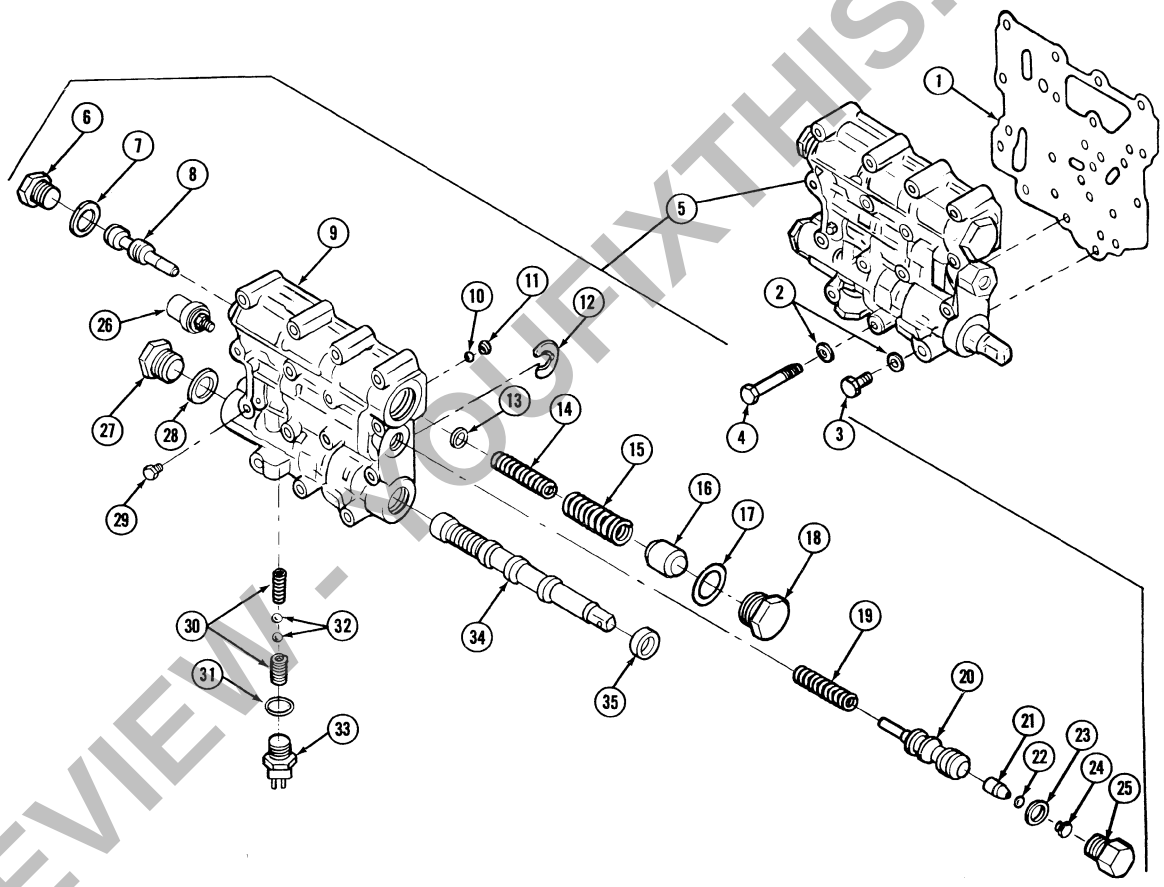

Figure 62

Control Valve Assembly – Exploded View

1. Control Valve Body Gasket
2. Lockwasher, 3/8 (16)
3. Bolt, 3/8-16 x 1
4. Bolt, 3/8-16 x 2-1/2 (15)
5. Control Valve Body Assembly
6. Plug
7. Gasket
8. Main Pressure Regulator Valve
9. Control Valve Body
10. Ball
11. Ball Retainer Plug
12. Valve Stop
13. Spring Retainer
14. Main Pressure Regulator Spring
15. Trimmer Spring
16. Trimmer
17. Gasket
18. Plug
19. Clutch Cutoff Valve Spring
20. Clutch Cutoff Valve
21. Cutoff Valve Plug
22. Sealring
23. Gasket
24. Cup
25. Retainer Plug
26. Oil Pressure Sender Assembly
27. Plug
28. Gasket
29. Plug
30. Detent Spring (2)
31. Gasket
32. Detent Ball (2)
33. Plug
34. Manual Range Selector Valve
35. Oil Seal

PREVIEW - YOUFIXTHIS.COM

Download full manual at youfixthis.com

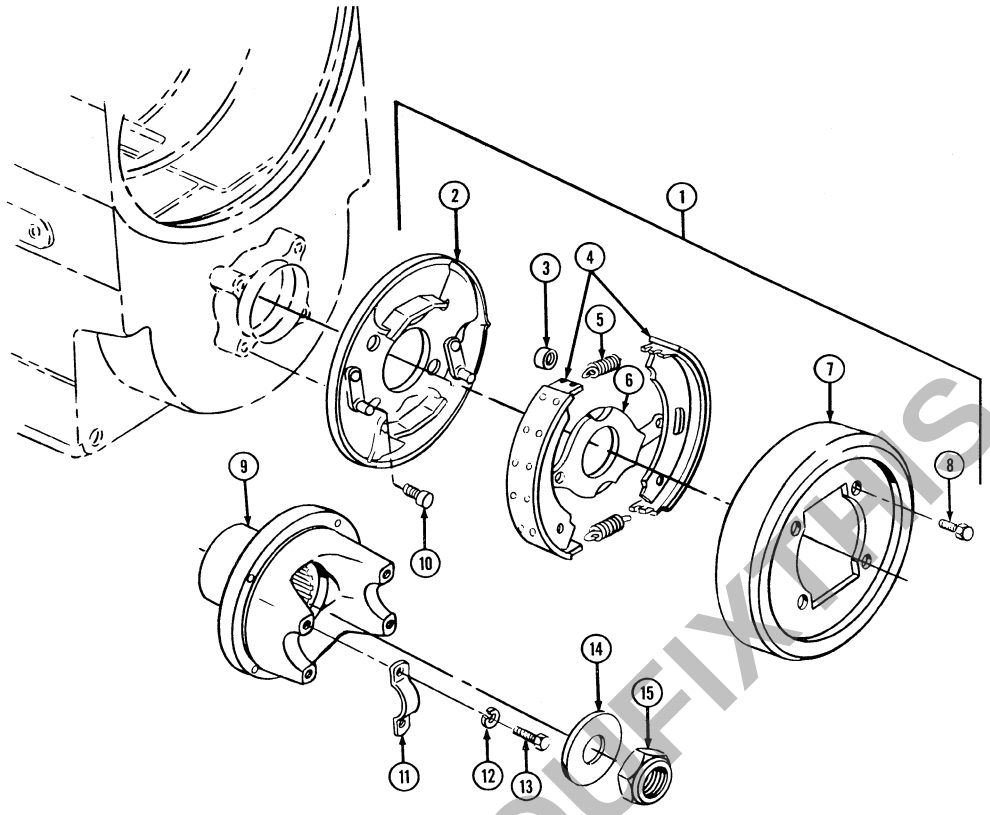

Figure 133

Parking Brake and Flanges – Exploded View

1. Parking Brake Assembly
2. Brake Back Plate
3. Roller
4. Brake Shoe and Lining (2)
5. Brake Shoe Return Spring (2)
6. Brake Apply Arm
7. Brake Drum
8. Self-Locking Bolt, 3/8-24x5/8 (4)
9. Front Flange
10. Self-Locking Bolt, 1/2-13x7/8 (4)
11. Retainer (Universal Joint Spider)
12. Lockwasher, 5/16 (4)
13. Bolt, 5/16-24 x 1-1/8
14. Flange Washer
15. Flange Retaining Nut, 1-1/4-12 (Nylon Insert)

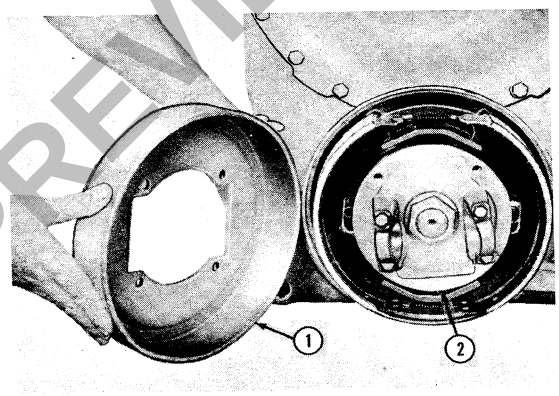

Figure 134

Installing the Parking Brake Drum

1. Brake Drum
2. Output Flange

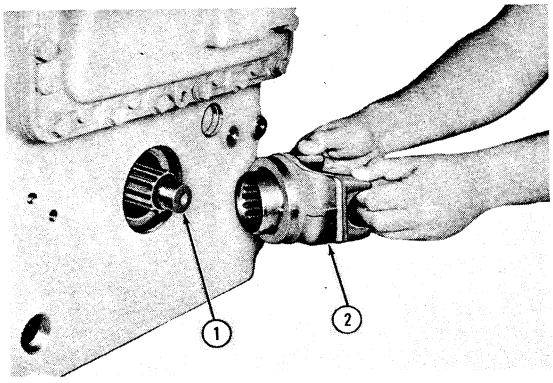

Figure 135

Rear Output Flange Installation

1. Rear Output Shaft
2. Rear Output Flange

PREVIEW - YOUFIXTHIS.COM
Download full manual at youfixthis.com

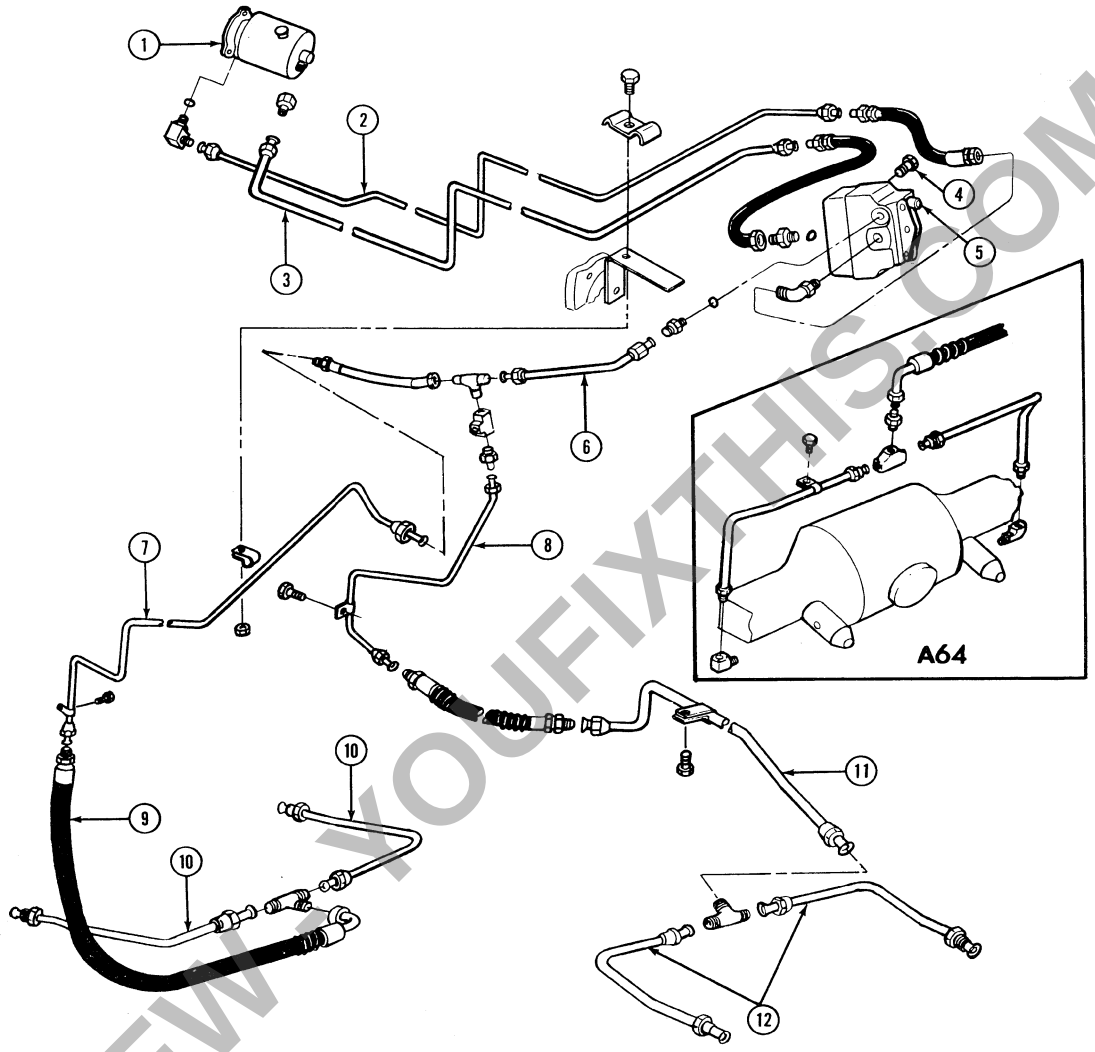

Figure 14
A-64 and A-66 Brake System

1. Brake Pump
2. Pump Pressure (Outlet)Tube
3. Pump Return Tube
4. Control Valve Mounting Bolt
5. Brake Control Valve
6. Brake Cylinder Outlet Tube
7. Intermediate to Rear Hose Tube
8. "T" to Front Axle Tube
9. Brake Hose Assembly
10. Power Brake Tubes
11. Front Intermediate Tube
12. Power Brake Tube

4. POWER BRAKE CONTROL VALVE

A. REMOVAL

1. Position the loader in a full right hand lock and shut off the engine.
2. Remove the floor mat, the floor plate retaining bolts, and the floor plate, Figure 15.

PREVIEW - YOUFIXTHIS.COM
Download full manual at youfixthis.com

PREVIEW - YOUFIXTHIS.COM

Download full manual at youfixthis.com

PART 7
STEERING

Chapter 2

STEERING MOTOR AND COLUMN ASSEMBLY - REMOVAL, INSTALLATION AND OVERHAUL

Section		Page
1.	STEERING MOTOR AND COLUMN ASSEMBLY REMOVAL AND INSTALLATION	13
2.	STEERING MOTOR OVERHAUL	15

STEERING MOTOR AND COLUMN ASSEMBLY REMOVAL AND INSTALLATION

A. REMOVAL

NOTE: Place the wheel loader in a 3/4 to full left turn position. This position will make the motor hose connections, the shift lever and push rod connection more accessible from underneath the operator's platform. Apply the parking brake, shut the engine off and place the shift lever in the neutral position.



CAUTION: Disconnect the battery negative (ground) cable at the battery.

1. Remove the floor mat and the center floor plate.
2. Disconnect the four hoses at the steering motor, Figure 2, and remove the hose elbows, connectors and O-rings. Discard the O-rings. Plug the hose ends and the motor ports to prevent the entry of dirt or debris.
3. Disconnect the shift push rod assembly from the shift shaft lever above the motor, Figure 12, by removing the rod ball joint nut and allow the rod to drop out of the shaft lever.
4. Loosen the emergency brake cable locknut at the cable bracket on the steering motor support, Figure 2. Slip the cable out of the bracket slot.
5. Remove the steering wheel cap, nut and steering wheel from the steering shaft.
6. Remove the three screws from the shift lever top cover and remove the cover.
7. Remove the shift lever retaining pin, lever spring and shift lever from the coupler.
8. Remove the shift lever coupler retaining bolt and remove the coupler and key from the shaft assembly.
9. Remove the two shift lever bracket clamp bolts and nuts and remove the clamp.
10. Remove the lower cover and the shift lever bracket with the neutral lock lever attached.

    NOTE: When turn signals and hazard warning lights are installed, the switch assembly is attached to the shift lever bracket. Disconnect the switch wires at the signal relay and the turn signal wiring harness before removing the bracket.

PREVIEW - YOUFIXTHIS.COM
Download full manual at youfixthis.com

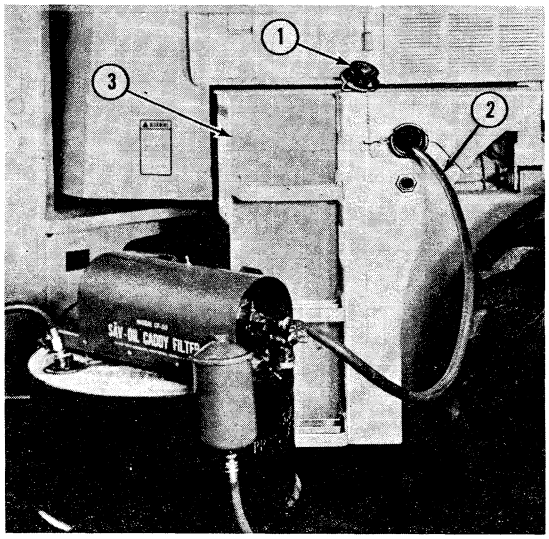

Figure 22
Loader Hydraulic System

1. Filler Cap
2. Suction Line
3. Reservoir

NOTE: A drain plug is provided in the bottom of the reservoir.

Hydraulic oil reservoir capacities are as follows:

	Gal.	Imp. Gal.	Liters
A-62 Loader	43	35.8	162.8
A-64 and A-66 Loaders	50	41.6	189.3

2. Disconnect the pump suction lines and the filter return line. Cap or plug all openings. Replace the filler cap.

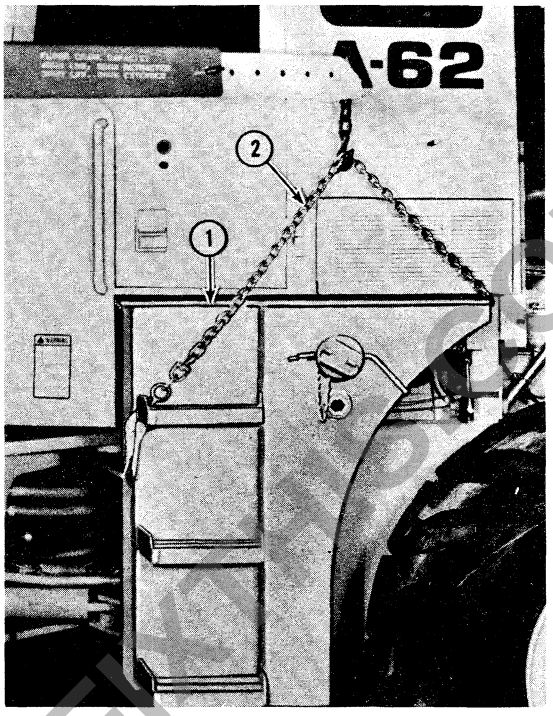

Figure 23
Hydraulic Oil Reservoir

1. Reservoir
2. Chain Sling

3. Attach a chain sling to the reservoir, Figure 23.

4. Remove the four attaching bolts and remove the reservoir from the frame.

3. HYDRAULIC PUMP

The hydraulic pump is attached to the rear of the transmission housing with 4 bolts, Figure 24.

Before the pump is removed, drop the loader bucket to the floor and remove the reservoir cap to relieve the pressure in the system. This will prevent loss of oil if the control lever is moved while the oil tubes are disconnected.

PREVIEW - YOUFIXTHIS.COM
Download full manual at youfixthis.com

2. LOADER TROUBLE SHOOTING

PROBLEM	POSSIBLE CAUSES	TEST
Lift fails to operate, is slow, or has loss of power.	Internal valve leakage.	Perform Cylinder Packing Leakage Test.
	Piston packings and/or piston O-Rings or cylinder walls of lift cylinders.	
Bucket fails to operate, is slow, or looses power.	Internal valve leakage.	Perform Cylinder Packing Leakage Test.
	Piston packings, piston O-Rings or cylinder walls of bucket cylinders.	
Lift and Bucket fails to operate, is slow, or looses power.	Hydraulic pump drive inoperative.	Check Pump Shaft Splines.
	Hydraulic pump pumping elements damaged or worn gears, pocket seal, or pressure plates.	Perform Hydraulic Pump Performance Test.
	Aeration: Air entering the system at suction tube, pump shaft, fittings, or cylinder gland packings.	Perform Hydraulic Pump Performance Test.
	Cavitation: Restriction in the system at the inlet line.	Perform Hydraulic Pump Performance Test.
	Loader system relief valve stuck open, O-Rings damaged or missing, damaged seat.	Perform Loader Valve System Relief Test or Loader Valve Circuit Test.
Cylinders leak down (Spools in neutral).	Internal valve leakage.	Perform Cylinder Packing Leakage Test.
	Piston packings, piston O-Rings or cylinder walls of lift cylinders.	

PREVIEW - YOUFIXTHIS.COM

Download full manual at youfixthis.com

3. RADIATOR SHELL REMOVAL AND INSTALLATION

REMOVAL

1. Open the engine side panel doors and disconnect the brake light wire connections from the main wiring harness, Figure 11.
2. Install an eye bolt at the hole provided in the top center of the radiator shell, Figure 11.
3. Remove the four hood-to-radiator shell attaching bolts, Figure 2.
4. Remove the four rear bolts (two each) securing the lower side panels to the radiator shell, Figure 2.
5. Attach a chain hoist with a minimum 1/2 ton (500 Kg) capacity to the eye bolt, Figure 11.
6. Remove the four radiator shell mounting bolts and remove the radiator shell, Figure 12.

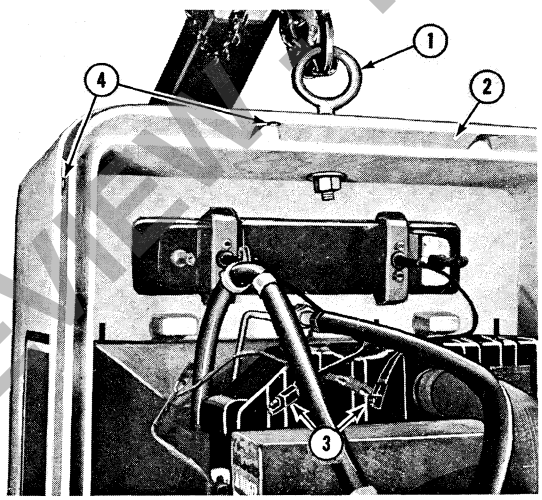

Figure 11

1. Eye Bolt
2. Radiator Shell
3. Brake Light Connections
4. Hood-to-Radiator Shell Attaching Bolt Holes

INSTALLATION

1. Install an eye bolt at the hole provided in the top center of the radiator shell, Figure 11.
2. Attach a chain hoise with a minimum 1/2 ton (500 Kg) capacity to the eye bolt, Figure 11.
3. Position the radiator shell on the wheel loader frame and secure with the four mounting bolts, Figure 12. Remove the eye bolt from the radiator shell.
4. Secure the lower side panels to the radiator shell, Figure 2.
5. Connect the brake light wire connections to the main wiring harness, Figure 11.
6. Secure the hood to the radiator shell with the four attaching bolts, Figure 2.

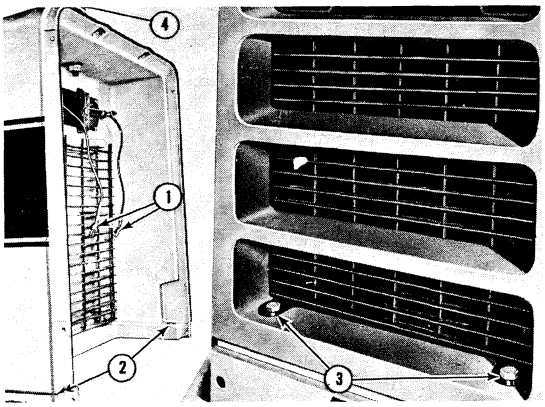

Figure 12

Grille and Counterweight Assembly

1. Brake Light Connections
2. Inside Mounting Bolt Location
3. Rear Mounting Bolt Location
4. Eye Bolt

PREVIEW - YOUFIXTHIS.COM

Download full manual at youfixthis.com

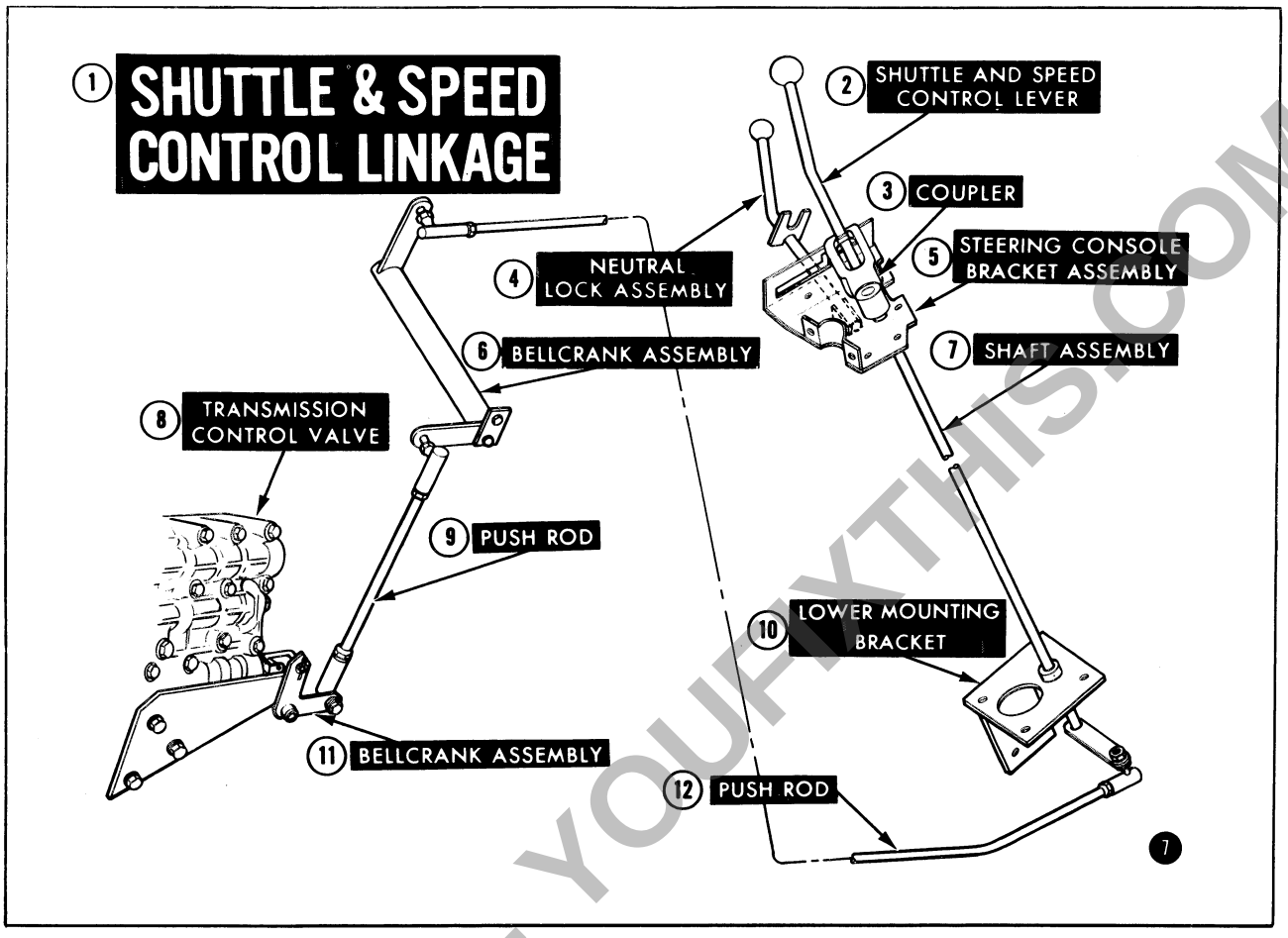

FRAME 7

The single shuttle and speed lever is connected through a coupler, shaft, two push rod assemblies and two bellcrank assemblies to the transmission control valve lower spool.

The neutral lock assembly pivots on the steering console bracket assembly and when moved up will lock the shuttle lever in the neutral position.

PREVIEW - YOUFIXTHIS.COM

Download full manual at youfixthis.com

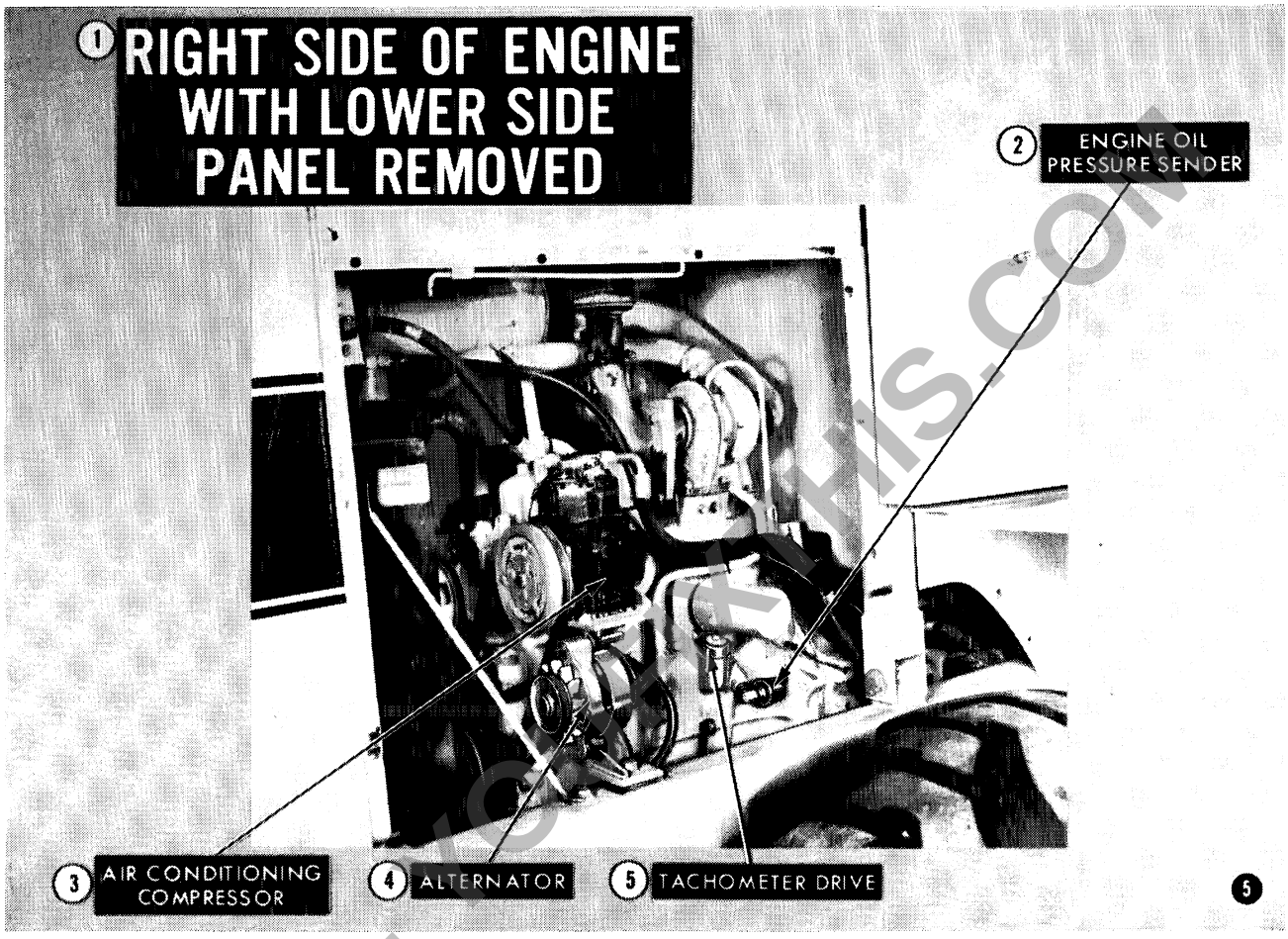

FRAME 5

The engine lube oil pressure sender is located in the main oil gallery and is connected electrically to the pressure indicator on the instrument panel.

The Wheel Loaders are not equipped with a tachometer. However, the engines are equipped with a tachometer drive. The drive is driven from the camshaft through the engine oil pump drive gear assembly.

The tachometer drive on the Wheel Loaders is to be used for checking and adjusting engine rpm only. A hand tachometer will be required for this purpose.

The 55 amp alternator and the air conditioner are carry over items from other units. Technical details of the alternator and air conditioning systems will be covered under their respective sections.

PREVIEW - 10 FIX THIS.COM

Download full manual at youfixthis.com

① BUCKET SECTION-ROLLBACK OR CURL

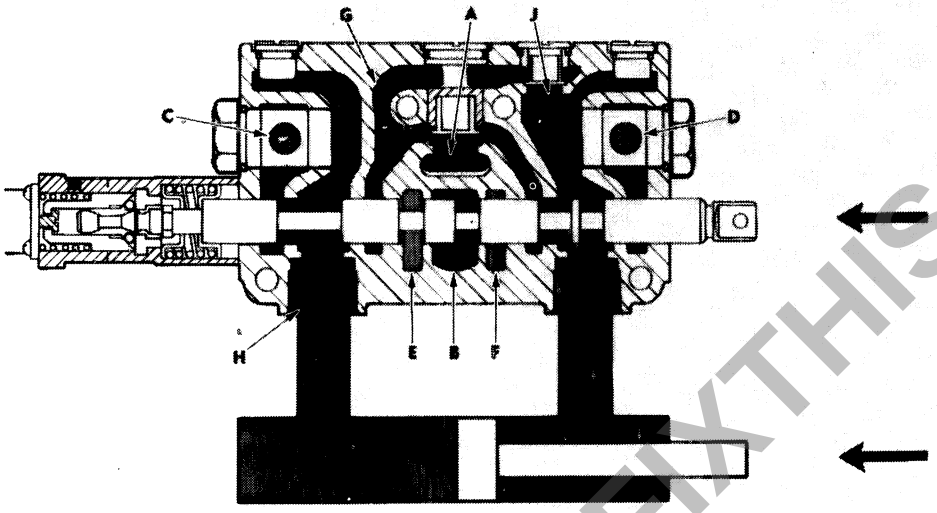

18

FRAME 18

Pumped oil enters the bucket section where the bucket spool has closed off passageways E and F and the pressure in A and B has lifted the check valve and is free to flow through G and into J to the cylinder.

Return oil from the cylinder flows through passageway H into C and D and back to the reservoir.

PREVIEW - YOUFIXTHIS.COM

Download full manual at youfixthis.com

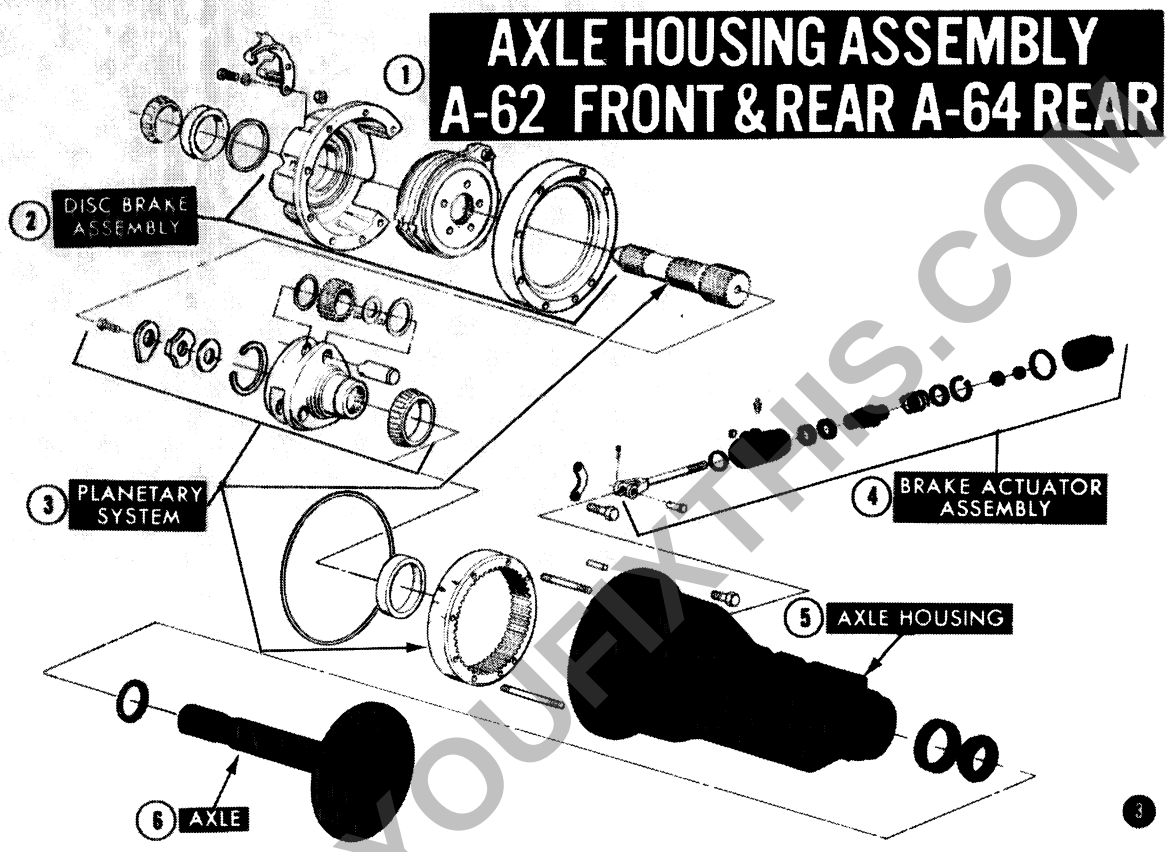

FRAME 3

The axle housing assembly consists of a trumpet, axle shaft, planetary gear set, disc brake assembly, and disc brake actuating cylinder.

Trumpet housings were strengthened by making casting walls thicker and modifying the inner contours near the shaft inner bearing to reduce stress concentration at that point. A new seal, similar to the 9000 tractor seal, is used to seal between axle shaft and trumpet housing. This seal, which does not require staking, is installed, seal lip inward, by pressing the retainer into its seat with a suitable tool. Axle shafts have new, stronger 14 bolt wheel mounting flanges and improved, stronger flange-axle weldments. A larger axle shaft outer bearing is used. No modifications were necessary to either the planetary gear set or the disc brake assemblies. A new single acting hydraulic cylinder is used to actuate the disc brake assembly.

PREVIEW - YOUFIXTHIS.COM

Download full manual at youfixthis.com

PREVIEW ONLY

You're viewing 25 of 712 pages

The full manual includes:

- All 712 pages, complete
- Searchable PDF (find any keyword)
- No watermarks
- Instant download
- Print-ready quality

GET FULL MANUAL NOW

Ford A-62, A-64, A-66 Service Manual

Scan or click anywhere
youfixthis.com

Click anywhere on this page to get the full manual