# ENGINE OVERHAUL

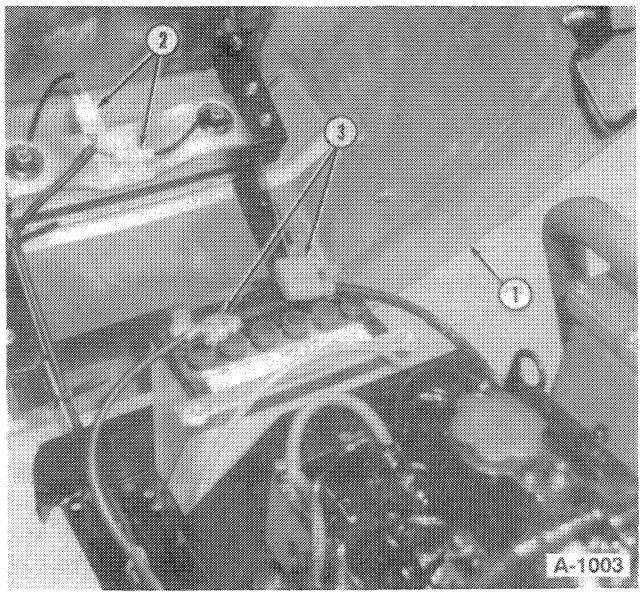


FIGURE 1-4

Engine Hood Removal

1 Hood
2 Headlight Connectors
3 Battery Cables

## ENGINE REMOVAL

1. Raise the hood, 1, and disconnect the headlight wiring connector, Figure 1-4.
2. Remove the two bolts of hood pivot pins R.H. and L.H. and remove the hood from the tractor.
3. Drain the coolant from the radiator and engine block, Figure 1-5.
4. Disconnect the battery cables, 3, Figure 1-4 from the battery terminal posts.

**WARNING: DISCONNECT THE NEGATIVE CABLE AT THE BEGINNING.**

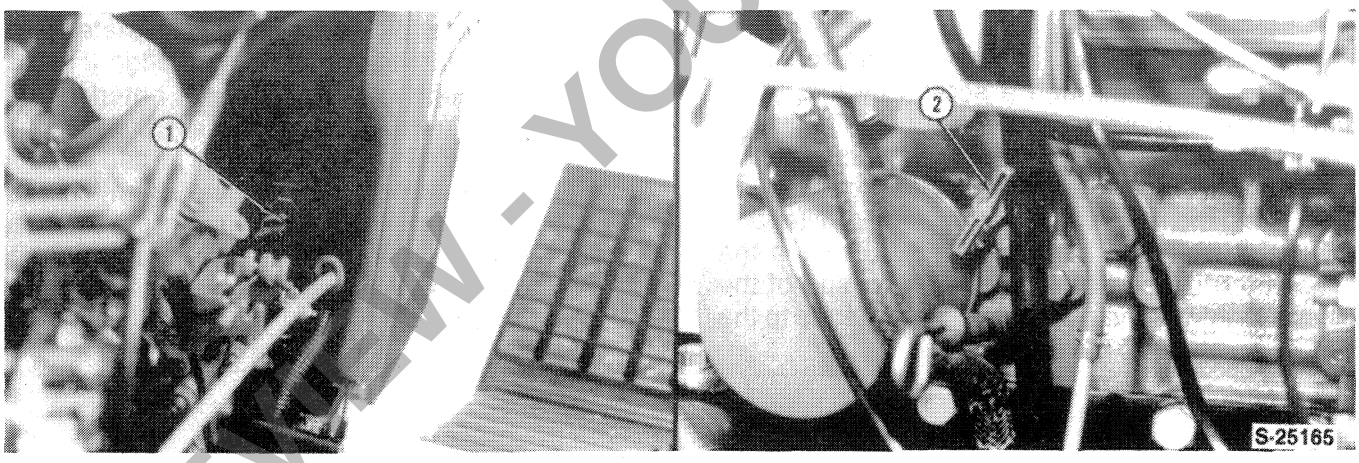


FIGURE 1-5

Coolant Drainage Locations

1 Radiator Drain Cock
2 Engine Block Drain Cock

PREVIEW - YOUFIXTHIS.COM



Download full manual at youfixthis.com

# SPECIFICATIONS

**GENERAL (On Model GT65)**

| | |
|---|---|
| Tractor Model | 14 HP Diesel |
| Engine Model | E643 |
| Number of Cylinders | 3 |
| Bore x Stroke | 2.5 in. x 2.5 in. (64 x 64 mm) |

PREVIEW - YOUFIXTHIS.COM

Blurred on purpose. The manual you buy has this page in full quality.

Download full manual at youfixthis.com



**Blurred on purpose. The manual you buy has this page in full quality.**

PREVIEW - YOUFIXTHIS.COM

Download full manual at youfixthis.com

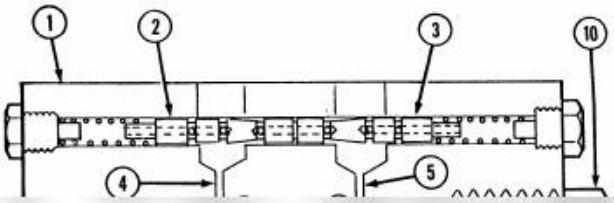


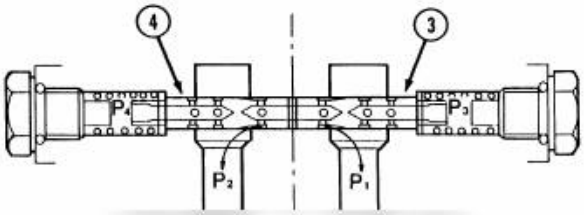


Blurred on purpose. The manual you buy has this page in full quality.

PREVIEW - YOUFIXTHIS.COM

Download full manual at youfixthis.com

# TROUBLESHOOTING

| CONDITION | POSSIBLE CAUSE |
|---|---|
| **Engine Does Not Develop Full Power** | 1 Clogged air cleaner.<br>2. Fuel line obstructed.<br>3. Improper injection timing.<br>4. Improper nozzle injection pressure and angle.<br>5. Low cylinder compression.<br>6. Insufficient fuel injection.<br>7. Improper valve lash adjustment.<br>8. Burned, worn or sticking valves.<br>9. Blown head gasket.<br>10. Worn or sticking piston ring.<br>11. Faulty engine stop solenoid.<br>12. Faulty electric fuel pump. |
| **Engine Will Not Stop** | 1. Faulty engine stop solenoid.<br>2. Faulty key start/shut-off switch. |
| **Low Cylinder Compression** | 1. Burned, worn, sticking valves.<br>2. Bent valve stem.<br>3. Broken or weak valve spring.<br>4. Blown cylinder head gasket.<br>5. Worn or sticking piston ring.<br>6. Blown piston. |
| **Poor Engine Idling** | 1. Improper injection timing.<br>2. Air in injection pump.<br>3. Improper governor adjustment. |

PREVIEW - YOUFIXTHIS.COM



Download full manual at youfixthis.com

# CONTENTS

## VOLUME 1


**INTRODUCTION** ..... **0-3**

**SECTION 1 – ENGINE SYSTEMS** ..... **1-1**

**DIESEL ENGINE (GT65 AND GT75)** ..... **1-1**

**ENGINE AND LUBRICATION SYSTEM** ..... **1-1**

DESCRIPTION AND OPERATION ..... 1-1

ENGINE OVERHAUL ..... 1-4

**COOLING SYSTEM** ..... **1-50**

DESCRIPTION AND OPERATION ..... 1-50

OVERHAUL ..... 1-53

**TROUBLESHOOTING** ..... **1-58**

**SPECIFICATIONS** ..... **1-63**

**SPECIAL TOOLS** ..... **1-71**

**COMPRESSION TEST AND TOOLS** ..... **1-72**

**ENGINE SYSTEMS – GASOLINE (GT85 AND GT95)** ..... **1-73**

**ENGINE AND LUBRICATION SYSTEM** ..... **1-73**

DESCRIPTION AND OPERATION ..... 1-73

ENGINE OVERHAUL ..... 1-74

**KOHLER ENGINE SERVICE MANUAL (GT85 AND GT95)** ..... **1-79**

GENERAL INFORMATION ..... 1.1

SPECIAL TOOLS ..... 2.1

PERIODIC MAINTENANCE ..... 3.1

TROUBLESHOOTING ..... 4.1

AIR CLEANER ..... 5.1

FUEL SYSTEM AND GOVERNOR ..... 6.1

LUBRICATION SYSTEM ..... 7.1

ELECTRICAL SYSTEM AND COMPONENTS ..... 8.1

DISASSEMBLY ..... 9.1

INSPECTION AND REPAIR/RECONDITIONING ..... 10.1

REASSEMBLY ..... 11.1


PREVIEW - YOUFIXTHIS.COM



Download full manual at youfixthis.com

## SECTION 2 – FUEL SYSTEMS


**DIESEL FUEL SYSTEM – (GT65 AND GT75) ..... 2-1**

DESCRIPTION AND OPERATION ..... 2-1

ADJUSTMENTS ..... 2-7

INJECTION PUMP TIMING ..... 2-9

FUEL TANK, PRE-FILTER, FINAL FILTER, ELECTRIC FUEL PUMP, INJECTION PUMP AND GOVERNOR - OVERHAUL ..... 2-13

**INJECTORS ..... 2-18**

DESCRIPTION AND OPERATION ..... 2-18

REMOVAL AND INSTALLATION ..... 2-19

OVERHAUL ..... 2-20

**TROUBLESHOOTING ..... 2-21**

**SPECIFICATIONS ..... 2-25**

**GASOLINE FUEL SYSTEM – (GT85 AND GT95) ..... 2-26**

DESCRIPTION AND OPERATION ..... 2-26

**INDEX – VOLUME 1 ..... 2-29**


PREVIEW - YOUFIXTHIS.COM



Download full manual at youfixthis.com

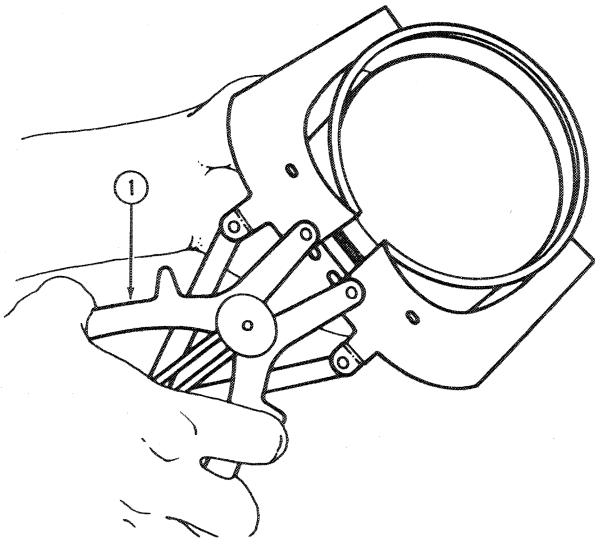


FIGURE 1-81

Piston Ring Removal

1 Ring Expander Tool

6. Using a suitable ring expander tool, remove the rings from the piston, Figure 1-81.
7. Remove the piston pin retaining rings and remove piston pin, Figure 1-82.

**NOTE: Keep all pistons components together in separately marked containers for reassembly in their original cylinder bores.**

## INSPECTION AND REPAIR

Clean all components in a suitable solvent and air dry. Remove any carbon from the pistons using a scraper or soft wire brush.

## PISTONS

1. Using a suitable ring groove cleaner, remove the carbon deposits from the ring grooves. Be careful to avoid cutting any metal from either the sides or bottom of the ring grooves.
2. Inspect the pistons for signs of overheating, cracks, or scoring. Replace the piston if visually damaged.

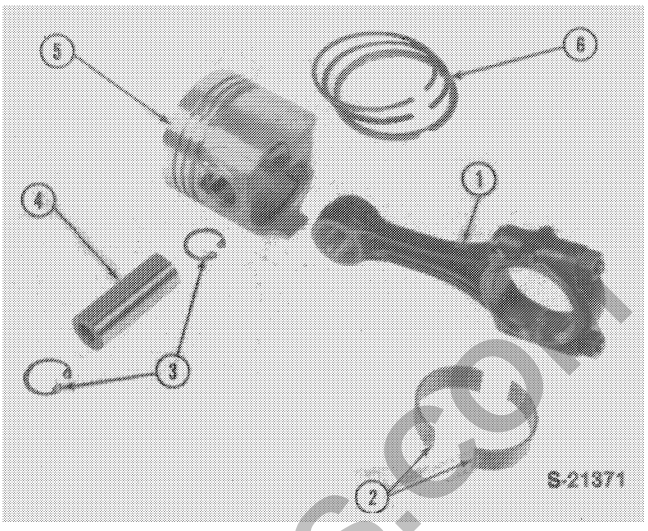


FIGURE 1-82

Piston and Rod Components

1 Connecting Rod
2 Bearings
3 Snap Rings
4 Piston Pin
5 Piston
6 Rings

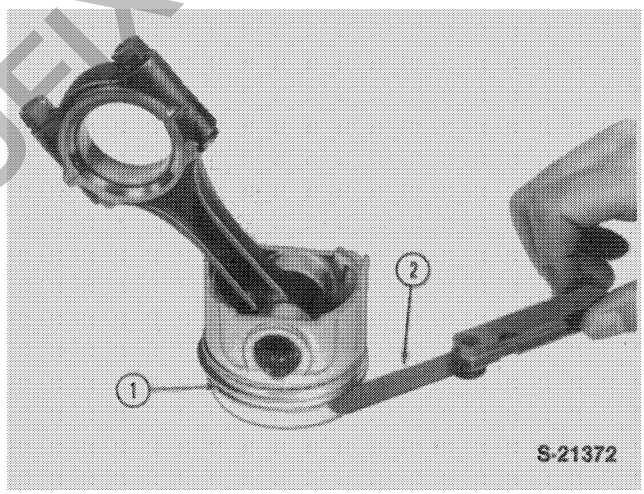


FIGURE 1-83

Piston Ring Groove Wear Check

1 Piston Ring (New)
2 Feeler Gauge

PREVIEW - YOUFIXTHIS.COM



Download full manual at youfixthis.com

# COMPRESSION TEST AND TOOLS

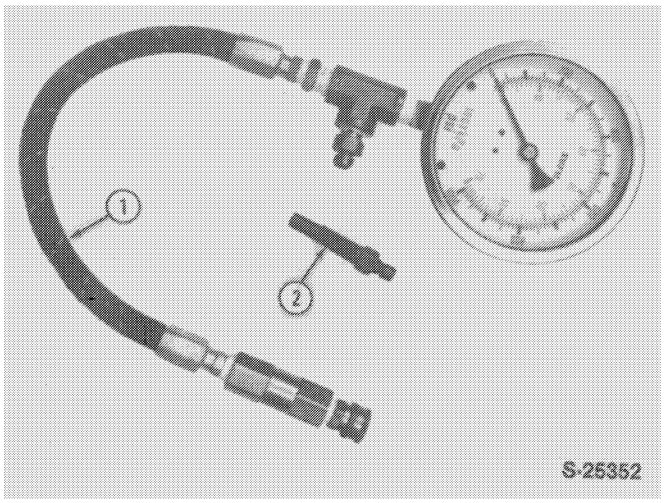


**FIGURE 1-126**

Compression Test Kit

1 Hose, Gauge, Check Valve, Relief Valve and Quick Coupler
2 Adapter Tool FNH 00120

## ENGINE COMPRESSION TEST

Compression test tool kit, Figure 1-126 is available for testing GT Series Tractors. The compression test on all tractors is performed through the glow plug ports. The test adapter tool is equipped with quick coupler ends for easy installation of the hose and gauge.

The procedures to perform a compression test are as follows:

1. Remove the wire, 1, Figure 1-127, from the fuel pump solenoid.
2. Remove the glow plug electrical wire and wire connectors from the top of the glow plugs.
3. Remove all the glow plugs.

   *IMPORTANT: Be sure all the glow plugs are removed before starting the compression tests.*

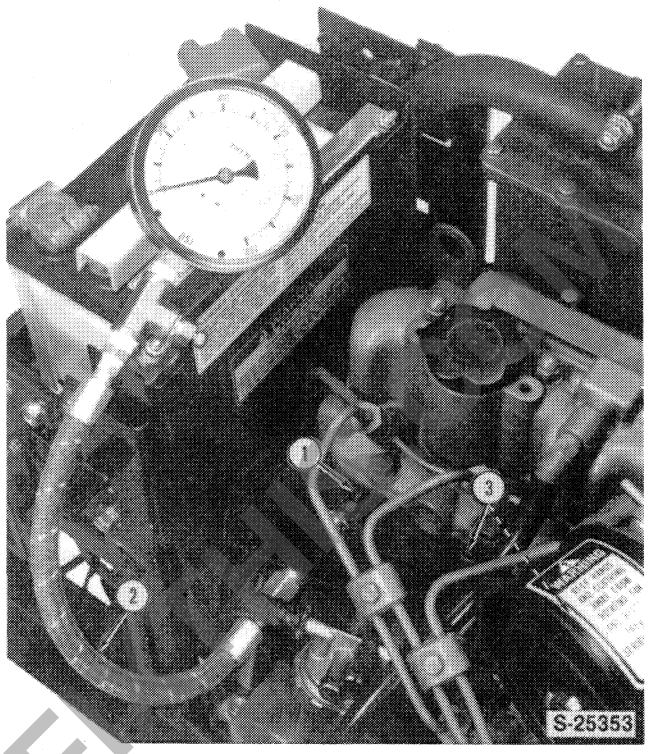


**FIGURE 1-127**

Compression Tools Installed

1 Adapter Tool FNH 00120
2 Hose and Gauge Installed
3 Glow Plug Ports (Open)

4. Install the adapter, 2, hose and gauge assembly, 3, in each port and crank the engine. The gauge should read 427 psi ±50 psi (29.5 ±3.5 bar).

   **NOTE: There should not be more than 50 psi (3.5 bar) variation between cylinders.**

5. To install the adapter tool in all the glow plug ports, it may be necessary to remove some injector fuel lines.

After performing the compression tests, install the glow plugs and electrical connections in reverse order of removal.

PREVIEW - YOUFIXTHIS



Download full manual at youfixthis.com

PREVIEW - YOUFIXTHIS.COM



Download full manual at youfixthis.com

MAGNUM

Twin Cylinder Engine
Service Manual
Models M18 & M20
TP-2204-A 3/86

KOHLER engines

# DISASSEMBLY

***WARNING: Accidental Starts!***

***Before servicing the engine or equipment, always remove the spark plug leads to prevent the engine from starting accidentally. Ground the leads to prevent sparks that could cause fires.***

The following sequence is suggested for complete engine disasssembly. This procedure may have to be varied slightly to accommodate options or special equipment.

Clean all parts thoroughly as the engine is disassembled. Only clean parts can be accurately inspected and gauged for wear and damage. There are many commercially available cleaners that quickly remove grease, oil, and grime from engine parts. When such a cleaner is used, follow the manufacturer's instructions carefully. Make sure all traces of the cleaner are removed before the engine is reassembled and placed in operation—even small amounts of these cleaners quickly break down the lubricating properties of engine oil.

1. Disconnect spark plug leads.
2. Drain oil and remove oil filter.
3. Remove mufflers and exhaust elbows.
4. Remove air cleaner.
5. Remove intake manifold and carburetor.
6. Disconnect wiring; remove rectifier-regulator, keyswitch, and solenoid.
7. Remove top baffle, cylinder head baffles, and blower housing.
8. Remove breather and valve cover.
9. Remove fuel pump.
10. Remove ignition module and bracket.
11. Remove grass screen, flywheel, and fan.
12. Remove electric starter.
13. Remove stator.
14. Identify engine sides.
15. Remove spark plugs and cylinder heads.
16. Remove cylinder barrels.
17. Remove valves.
18. Remove pistons from connecting rods.
19. Remove piston rings.
20. Remove closure plate, oil pressure relief valve, and rear oil seal.
21. Remove oil filter adapter.
22. Split the crankcase.
23. Remove camshaft and tappets.
24. Remove crankshaft, front oil seal, and bearings.
25. Remove connecting rods.
26. Remove governor gear and cross shaft.
27. Remove oil pickup and oil pump.

## DISCONNECT SPARK PLUG LEADS

## DRAIN OIL AND REMOVE OIL FILTER

1. Remove the oil fill cap, dipstick, and oil drain plug. Drain the oil from crankcase. Refer to Figure 9-1.

2. Remove and discard the oil filter.

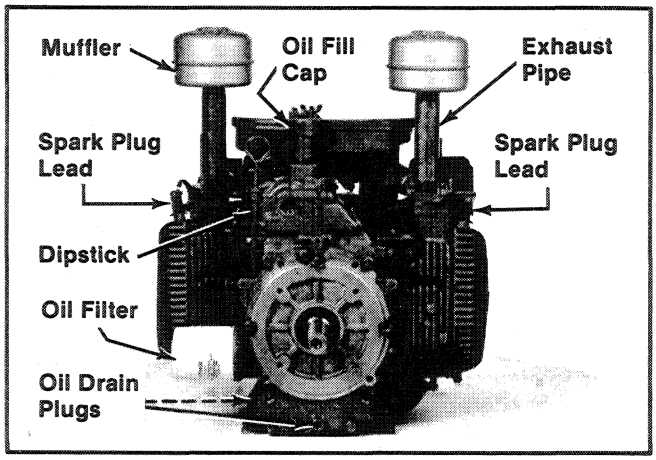


**Figure 9-1. Removing Spark Plug Leads, Oil Drain, Oil Filter, And Mufflers.**

PREVIEW - YOUFIXTHIS.COM



Download full manual at youfixthis.com

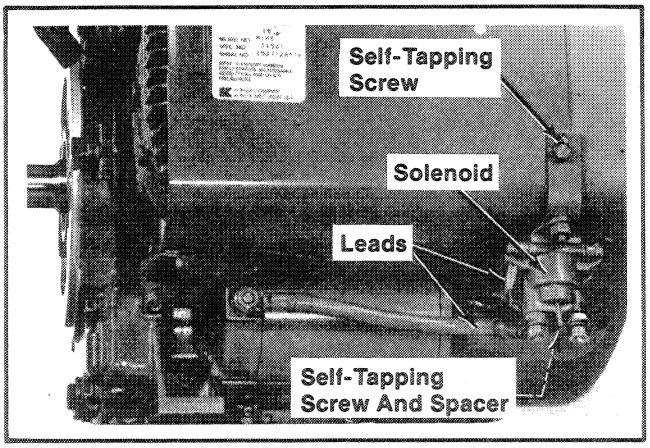


**Figure 11-43. Installing Starter Solenoid.**

2. Install the panel with keyswitch and self-tapping screws. Install the kill lead to connector. Install the connector to back of keyswitch. Refer to Figure 11-44.

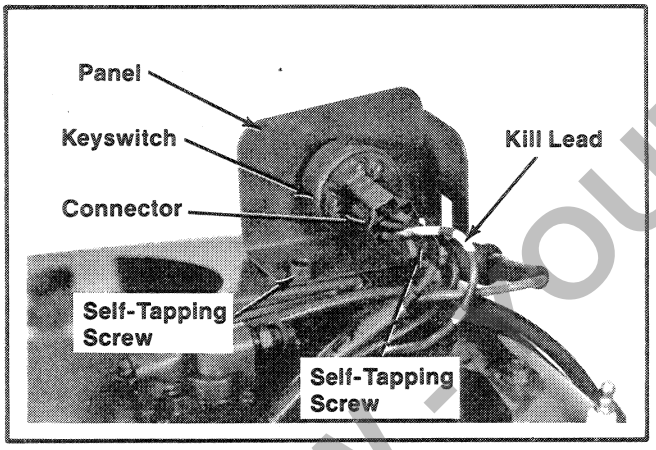


**Figure 11-44. Installing Keyswitch.**

3. Install the rectifier-regulator and hex cap screws. Install the lead to center position of connector. Install the connector to rectifier-regulator. Refer to Figure 11-45.

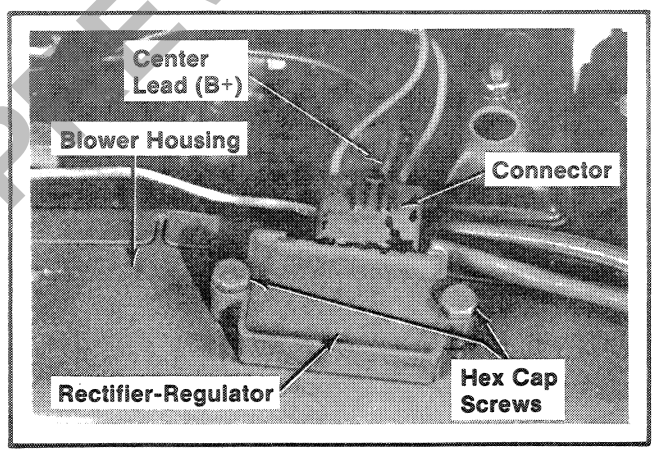


**Figure 11-45. Install Rectifier-Regulator.**

## INSTALL CARBURETOR AND INTAKE MANIFOLD

1. Install the gasket, intake elbow, plain washer, round head screw, int. tooth lock washers, and pan head screws to carburetor. Refer to Figure 11-46.

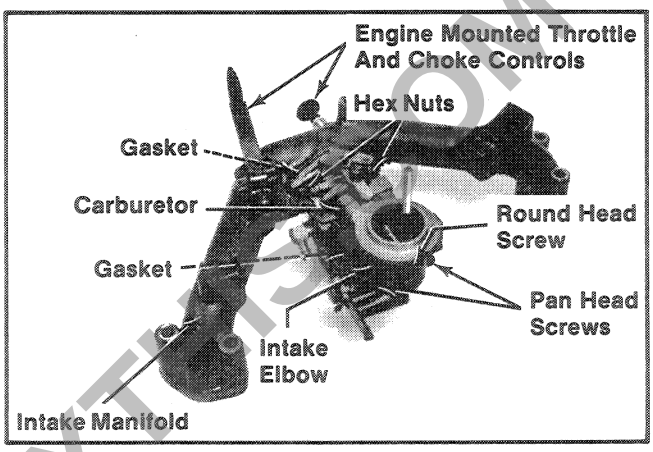


**Figure 11-46. Installing Carburetor To Intake Manifold.**

2. Install the gasket, carburetor with intake elbow, and hex nuts to intake manifold. Torque hex nuts to **150 in. lb.**

3. Install the engine mounted throttle and choke controls, if so equipped.

4. Install the gaskets, intake manifold with carburetor, lifting straps, split lock washers, and hex cap screws. Torque screws to **150 in. lb.** Refer to Figure 11-47.

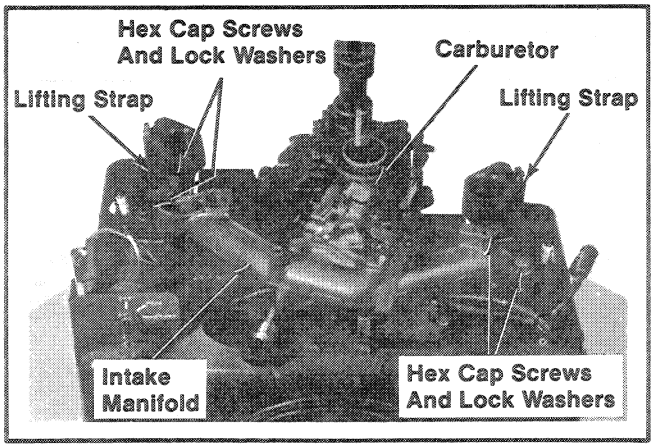


**Figure 11-47. Installing Intake Manifold And Carburetor.**

5. Install the fuel line and hose clamp to fuel pump outlet. Refer to Figure 11-48.



PREVIEW - YOUFIXTHIS.COM
Download full manual at youfixthis.com

# CONTENTS

## VOLUME 1


**INTRODUCTION** ..... **0-3**

**SECTION 1 – ENGINE SYSTEMS** ..... **1-1**

**DIESEL ENGINE (GT65 AND GT75)** ..... **1-1**

**ENGINE AND LUBRICATION SYSTEM** ..... **1-1**

DESCRIPTION AND OPERATION ..... 1-1

ENGINE OVERHAUL ..... 1-4

**COOLING SYSTEM** ..... **1-50**

DESCRIPTION AND OPERATION ..... 1-50

OVERHAUL ..... 1-53

**TROUBLESHOOTING** ..... **1-58**

**SPECIFICATIONS** ..... **1-63**

**SPECIAL TOOLS** ..... **1-71**

**COMPRESSION TEST AND TOOLS** ..... **1-72**

**ENGINE SYSTEMS – GASOLINE (GT85 AND GT95)** ..... **1-73**

**ENGINE AND LUBRICATION SYSTEM** ..... **1-73**

DESCRIPTION AND OPERATION ..... 1-73

ENGINE OVERHAUL ..... 1-74

**KOHLER ENGINE SERVICE MANUAL (GT85 AND GT95)** ..... **1-79**

GENERAL INFORMATION ..... 1.1

SPECIAL TOOLS ..... 2.1

PERIODIC MAINTENANCE ..... 3.1

TROUBLESHOOTING ..... 4.1

AIR CLEANER ..... 5.1

FUEL SYSTEM AND GOVERNOR ..... 6.1

LUBRICATION SYSTEM ..... 7.1

ELECTRICAL SYSTEM AND COMPONENTS ..... 8.1

DISASSEMBLY ..... 9.1

INSPECTION AND REPAIR/RECONDITIONING ..... 10.1

REASSEMBLY ..... 11.1


PREVIEW - YOUFIXTHIS.COM



Download full manual at youfixthis.com

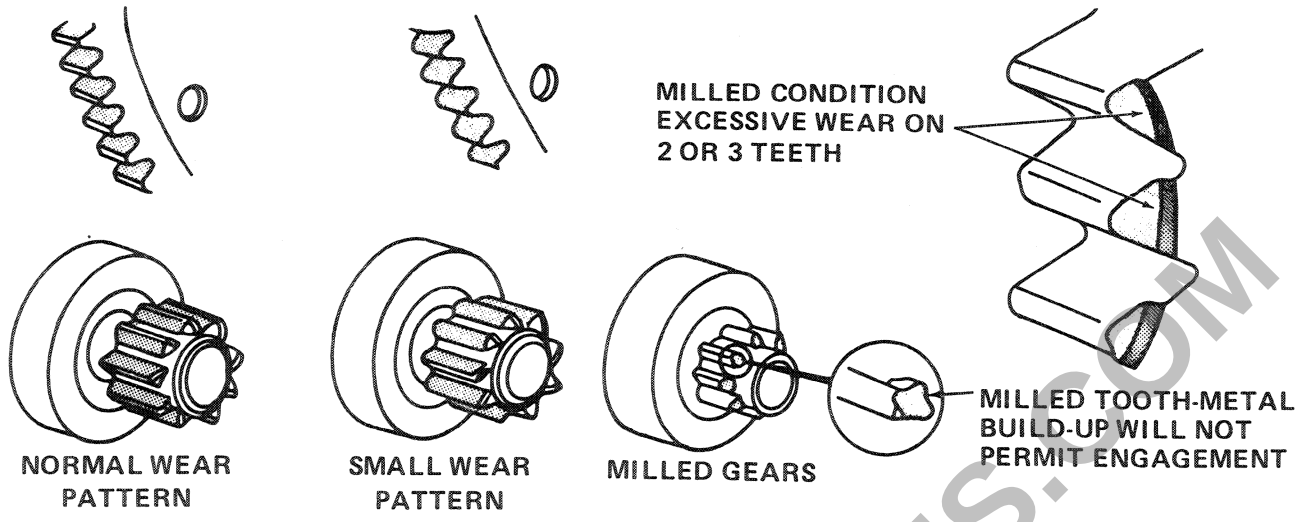


**FIGURE 3-59**

Pinion Gear Wear Check

14. Inspect the pinion and ring gear teeth for excessive wear or damage. Replace the pinion and ring gear assemblies if they are excessively milled, pitted or have damaged teeth, Figure 3-59.

    Check the pinion clutch action for sticking or binding. Replace the clutch assembly if defective.

## ELECTRICAL TESTS

1. ARMATURE COIL CONTINUITY TEST

   Using an ohmmeter, touch one ohmmeter lead to a commutator segment and the other ohmmeter lead to the adjacent segment and observe the ohmmeter reading, Figure 3-60.

   Repeat this procedure on each adjacent set of commutator segments.

   **Test Results**

   Low resistance reading = Good

   High resistance reading = Faulty armature coil – Replace.

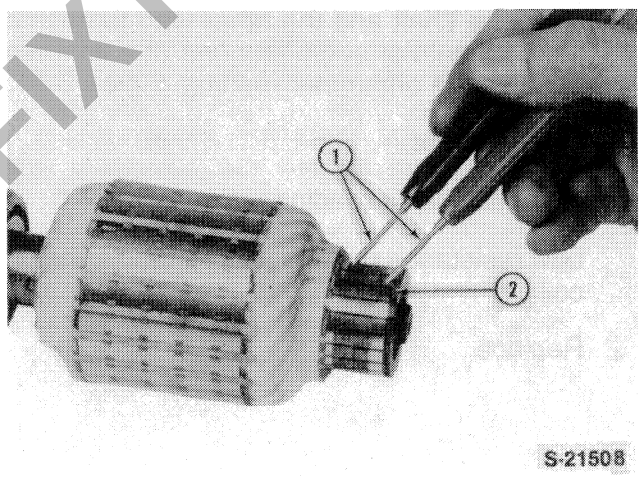


**FIGURE 3-60**

Armature Coil Continuity Test

1 Ohmmeter Leads
2 Commutator Segment

PREVIEW - YOUFIXTHIS.COM



Download full manual at youfixthis.com

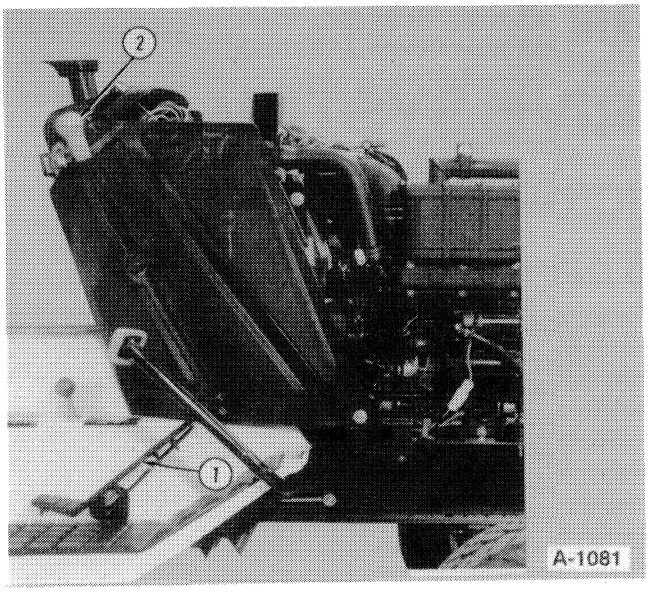


**FIGURE 4-3**

Hydrostatic Drive Control

1 Foot Pedal
2 Speed Control Lever

The hydrostatic unit is operated by a foot control pedal to provide forward, stop or reverse direction, Figure 4-3.

The foot pedal automatically returns to the neutral (stop) position when released, unless the HST speed control lever is in the "set" position. The speed is controlled by varying the amount of movement of the pedal from the neutral position.

The hydrostatic unit provides a variable forward speed from zero to 4.0 MPH in low range and from zero to 8.0 MPH in high range.

When on level ground and a constant forward speed is desired, shifting the control lever, Figure 4-3, into the set position will hold the foot pedal in a fixed position and permit the operator to remove his foot from the pedal. When the speed control lever is released the foot pedal automatically returns to neutral and the tractor stops.

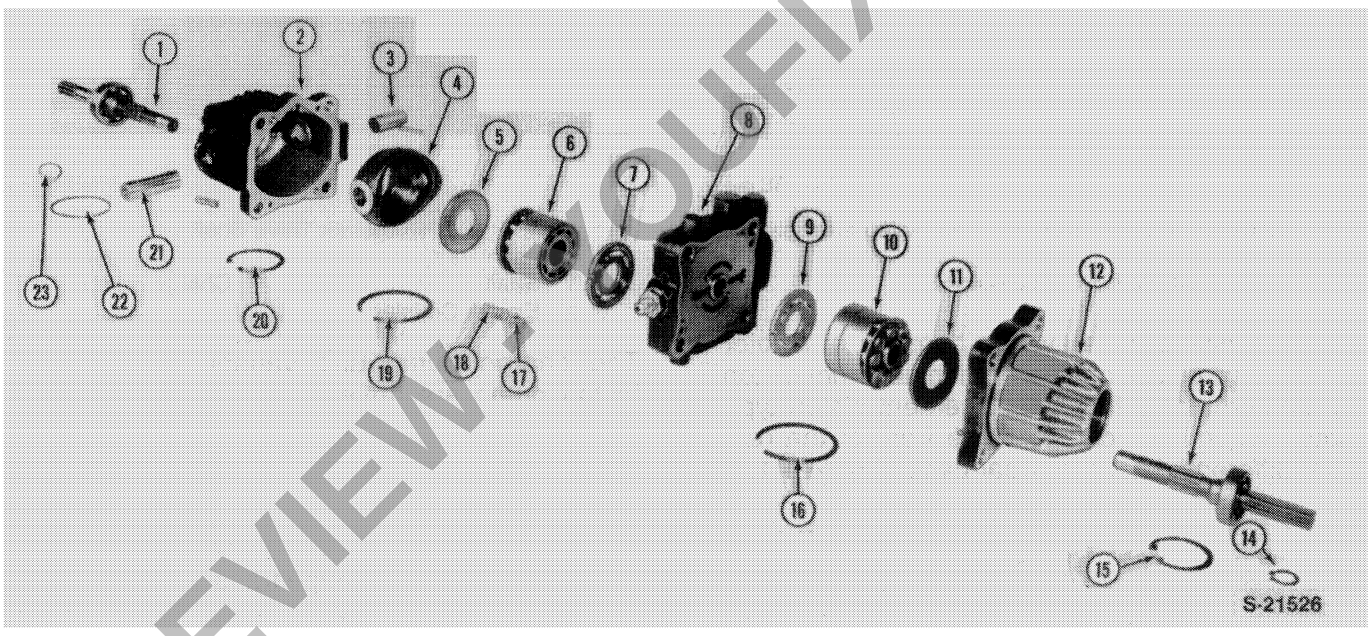


**FIGURE 4-4**

Hydrostatic Transmission Components

1 Input Shaft
2 Case - Pump
3 Trunnion
4 Swash Plate
5 Thrust Plate
6 Cylinder Block Assembly - Pump
7 Valve Plate
8 Port Block Assembly
9 Valve Plate
10 Cylinder Block Assembly - Motor
11 Thrust Plate
12 Case - Motor
13 Output Shaft
14 Snap Ring
15 Snap Ring
16 Snap Ring
17 Poppet - Regulating Valve
18 Spring - Regulating Valve
19 Snap Ring
20 Snap Ring
21 Trunnion
22 O-Ring
23 Snap Ring



PREVIEW - YOUFIXTHIS.COM
Download full manual at youfixthis.com

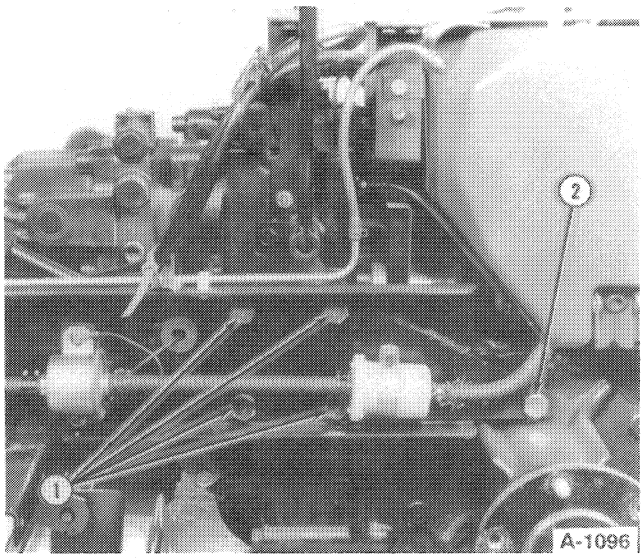


**FIGURE 5-14**

Transaxle Removal

1 Frame Support Bolts (8)
2 Axle Housing Support Bolts (2)

29. Remove fuel line clamp bolt and swing the fuel lines away from the transmission.

30. Support the tractor under the frame slightly forward of the transmission with suitable stands.

31. Using a floor jack under the transmission, support the transmission on the jack.

32. Remove the right frame-to-gear case retaining bolts, 1, Figure 5-14.

33. Remove the frame-to-rear axle retaining bolt, 2, Figure 5-14.

34. Carefully remove the transaxle from the rear of the frame.

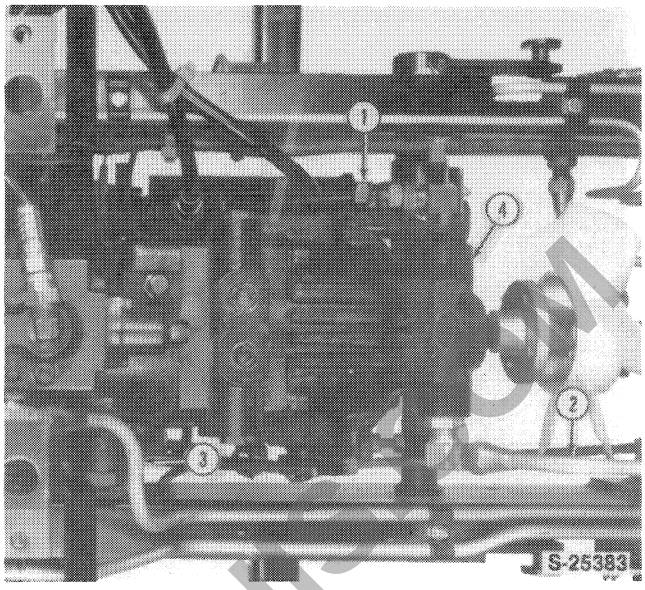


**FIGURE 5-15**

Hydrostatic Pump and Motor Removal

1 Suction Line
2 High Pressure Tube
3 Pressure Tube
4 Hydrostatic Pump and Motor Assembly

## DISASSEMBLY

1. If not previously removed, remove the suction (inlet) line, 1, from the filter and charge pump connector, Figure 5-15.

2. Remove the high pressure tube, 2, from the charge pump and hydraulic system control valve, Figure 5-15 (less power steering model).

3. Remove the pressure tube, 3, from the filter adaptor and HST port block, Figure 5-15.

4. Remove the hydrostatic pump and motor assembly as a unit from the transaxle gear case.

   **NOTE:Remove the HST upper right and lower left allen head retaining bolts. Do not remove the other two bolts.**

PREVIEW - YOUFIXTHIS.COM



Download full manual at youfixthis.com

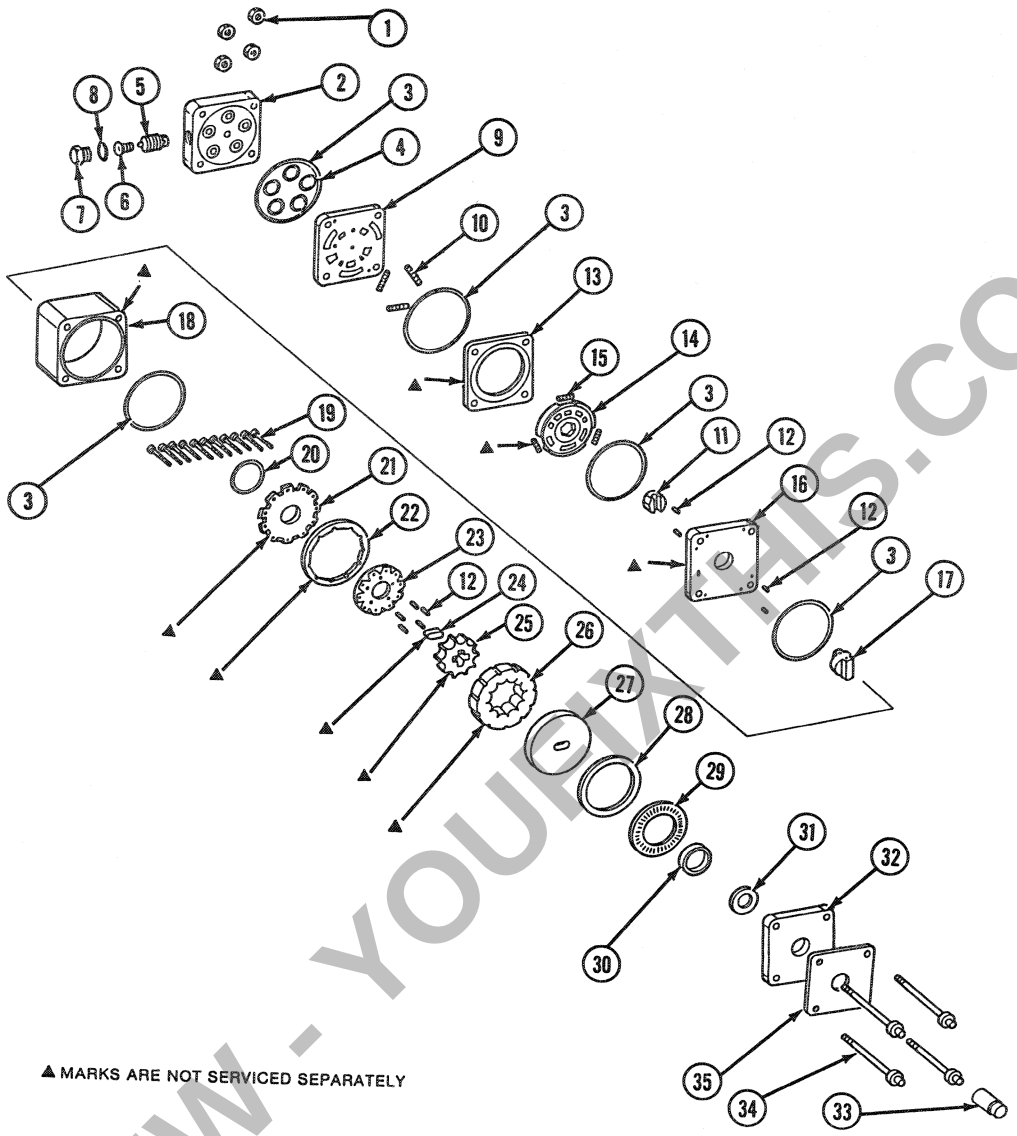


**FIGURE 6-31**

Steering Motor Components

| | | | | | |
|---|---|---|---|---|---|
| 1 | Nuts (4) 5/16 UNF 24 | 13 | Valve Ring* | 25 | Rotor* |
| 2 | Port Cover | 14 | Valve Plate* | 26 | Stator* |
| 3 | Seal Rings (5) | 15 | Spring 1/2 in. (13 mm) (3) | 27 | Drive Plate |
| 4 | O-Rings (5) | 16 | Isolation Manifold | 28 | Spacer Thrust Bearing |
| 5 | Relief Valve Cartridge | 17 | Drive Link | 29 | Thrust Bearing |
| 6 | Coil Spring | 18 | Metering Ring | 30 | Face Seal |
| 7 | Hex Plug | 19 | Screw – Hex Socket Head (11) | 31 | Seal Spacer |
| 8 | O-Ring | 20 | Seal – Commutator | 32 | Upper Cover Plate |
| 9 | Port Manifold | 21 | Commutator Cover | 33 | Input Shaft |
| 10 | Springs 3/4 in. (19 m) (3) | 22 | Commutator Ring* | 34 | Special Bolts 5/16″-24 UNF-2A (4) |
| 11 | Hex Drive Assembly | 23 | Commutator* | 35 | Upper Cover |
| 12 | Alignment Pin – Needle Bearing (9) | 24 | Spacer – Drive Link | | |



PREVIEW - YOUFIXTHIS.COM

Download full manual at youfixthis.com

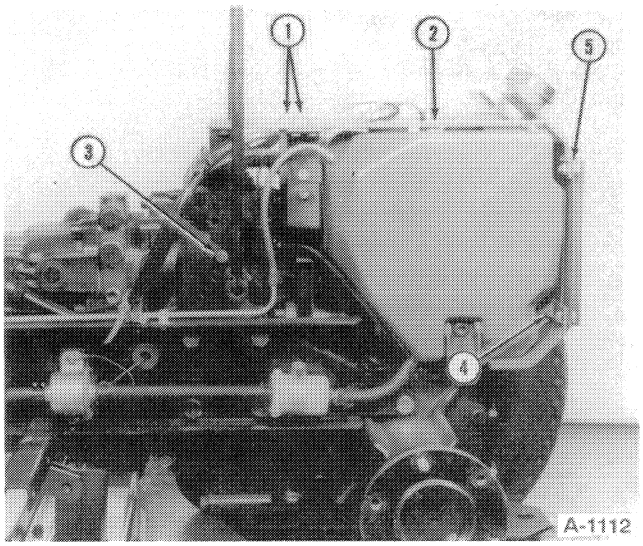


**FIGURE 8-11**

Seat Support Removal

1 Tank Support Bracket Bolts
2 Seat Support
3 Front Support Bolts
4 Rear Support Bolts
5 Shield

6. Remove the rear shield, 5, Figure 8-11.
7. Remove the bolts, 1, from the lift lever shaft support brackets to the seat support, 2, (two bolts each bracket), Figure 8-11..
8. Remove the front seat support bolts, 3, (one each side), Figure 8-11.
9. Remove the rear seat support bolts, 4, Figure 8-11.
10. Remove the seat support from the tractor.
11. Disconnect the two hoses, 1, from the control valve and plug all openings, Figure 8-12.
12. Remove the two pressure tubes, 1, from the control valve and plug all openings, Figure 8-13.

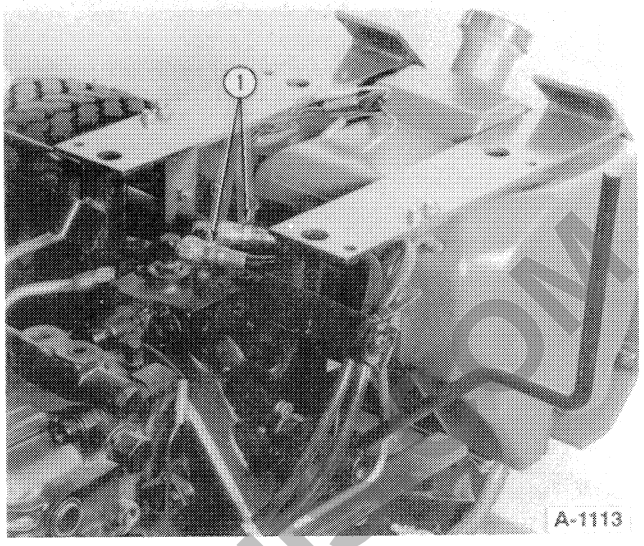


**FIGURE 8-12**

Lift Cylinder Hose Removal

1 Hose (2)

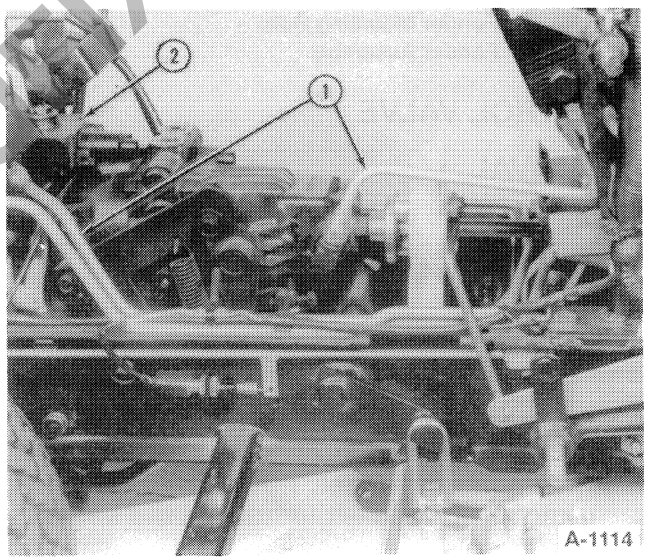


**FIGURE 8-13**

Control Valve Pressure Tube Removal

1 Pressure Tube (2)
2 Control Valve

PREVIEW - YOUFIXTHIS.COM



Download full manual at youfixthis.com

# PREVIEW ONLY

You're viewing 18 of 466 pages

## The full manual includes:

- All 466 pages, complete
- Searchable PDF (find any keyword)
- No watermarks
- Instant download
- Print-ready quality

GET FULL MANUAL NOW

**Ford GT65, GT75, GT85, GT95 Service Manual**

**Scan or click anywhere**
**youfixthis.com**

*Click anywhere on this page to get the full manual*