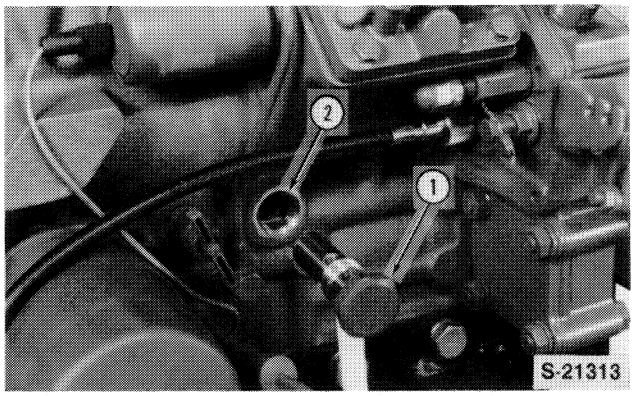

Figure 3
Engine Oil Relief Valve Location
1. Relief Valve
2. Main Oil Gallery

ENGINE OIL FILTER

Because engine oil becomes contaminated with dust, carbon particles, metal and sludge it is first directed through a filter before entering the lubrication system. The filter is a full flow type, whereby all the oil from the pump is routed through the filter. To protect the engine from loss of lubrication in the event of a plugged or restricted filter, a relief valve in the filter opens and permits unfiltered oil to flow through the system to maintain engine lubrication.

B. ENGINE OVERHAUL

ENGINE REMOVAL

1. Raise the hood (1) and remove the side screens (2), Figure 4.

2. Disconnect the two headlight wiring connectors (2), Figure 5.

3. Remove the two hood pivot pins (4) and brace (3) and remove the hood from the tractor.

4. Drain the coolant from the radiator and engine block, Figure 6.

5. Disconnect the battery cables (5), Figure 5, from the battery terminal posts.



Figure 4
Engine Hood and Screens
1. Engine Hood
2. Engine Side Screens (2)
3. Engine Grill

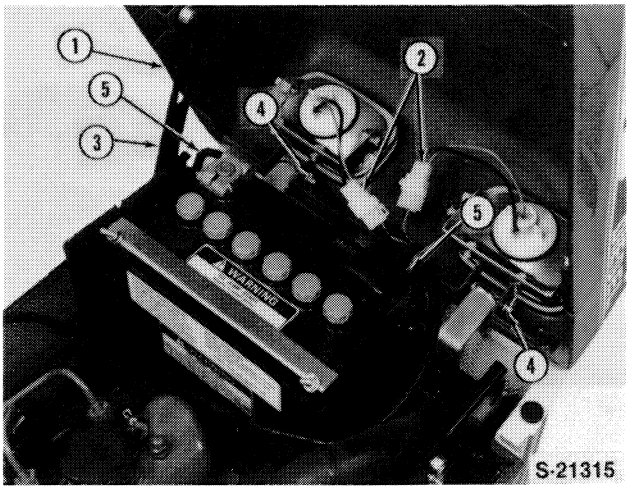

Figure 5
Engine Hood Removal
1. Hood
2. Headlight Connectors
3. Brace
4. Pivot Pins
5. Battery Cables

PREVIEW - YOUFIXTHIS.COM

Download full manual at youfixthis.com

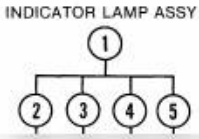

Blurred on purpose. The manual you buy has this page in full quality.

PREVIEW - YOUFIXTHIS.COM

Download full manual at youfixthis.com

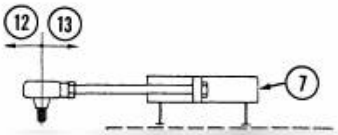

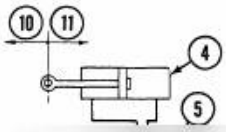

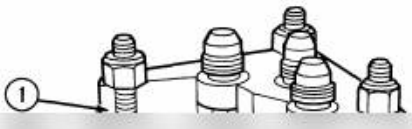

PREVIEW - YOUFIXTHIS.COM

Blurred on purpose. The manual you buy has this page in full quality.

Download full manual at youfixthis.com

B. SPECIFICATIONS (Cont'd.)

Thermostat	
Start to Open	160°F (71°C)
Fully Open	[illegible]

PREVIEW - YOUFIXTHIS.COM

Blurred on purpose. The manual you buy has this page in full quality.

Download full manual at youfixthis.com

PART 1
ENGINE

Chapter 3
TROUBLE SHOOTING, SPECIFICATIONS AND SPECIAL TOOLS

Section		Page
A.	TROUBLE SHOOTING	51
B.	SPECIFICATIONS	55
C.	SPECIAL TOOLS	62
D.	COMPRESSSION TEST AND TOOLS	62

PREVIEW - YOUFIXTHIS.COM

A. TROUBLE SHOOTING

CONDITION	POSSIBLE CAUSE
Engine Does Not Develop Full Power	1. Clogged air cleaner. 2. Fuel line obstructed. 3. Improper injection timing. 4. Improper nozzle injection pressure and angle. 5. Low cylinder compression. 6. Insufficient fuel injection. 7. Improper valve lash adjustment. 8. Burned, worn or sticking valves. 9. Blown head gasket. 10. Worn or sticking piston ring. 11. Faulty engine stop solenoid. 12. Faulty electric fuel pump.
Engine Will Not Stop	1. Faulty engine stop solenoid. 2. Faulty key start/shut-off switch.
Low Cylinder Compression	1. Burned, worn, sticking valves. 2. Bent valve stem. 3. Broken or weak valve spring. 4. Blown cylinder head gasket. 5. Worn or sticking piston ring. 6. Blown piston.
Poor Engine Idling	1. Improper injection timing. 2. Air in injection pump. 3. Improper governor adjustment.

Download full manual at youfixthis.com

B. SPECIFICATIONS

GENERAL (On Model LGT 14D)

Tractor Model	14 HP Diesel LGT

Blurred on purpose. The manual you buy has this page in full quality.

PREVIEW - YOUFIXTHIS.COM

Download full manual at youfixthis.com

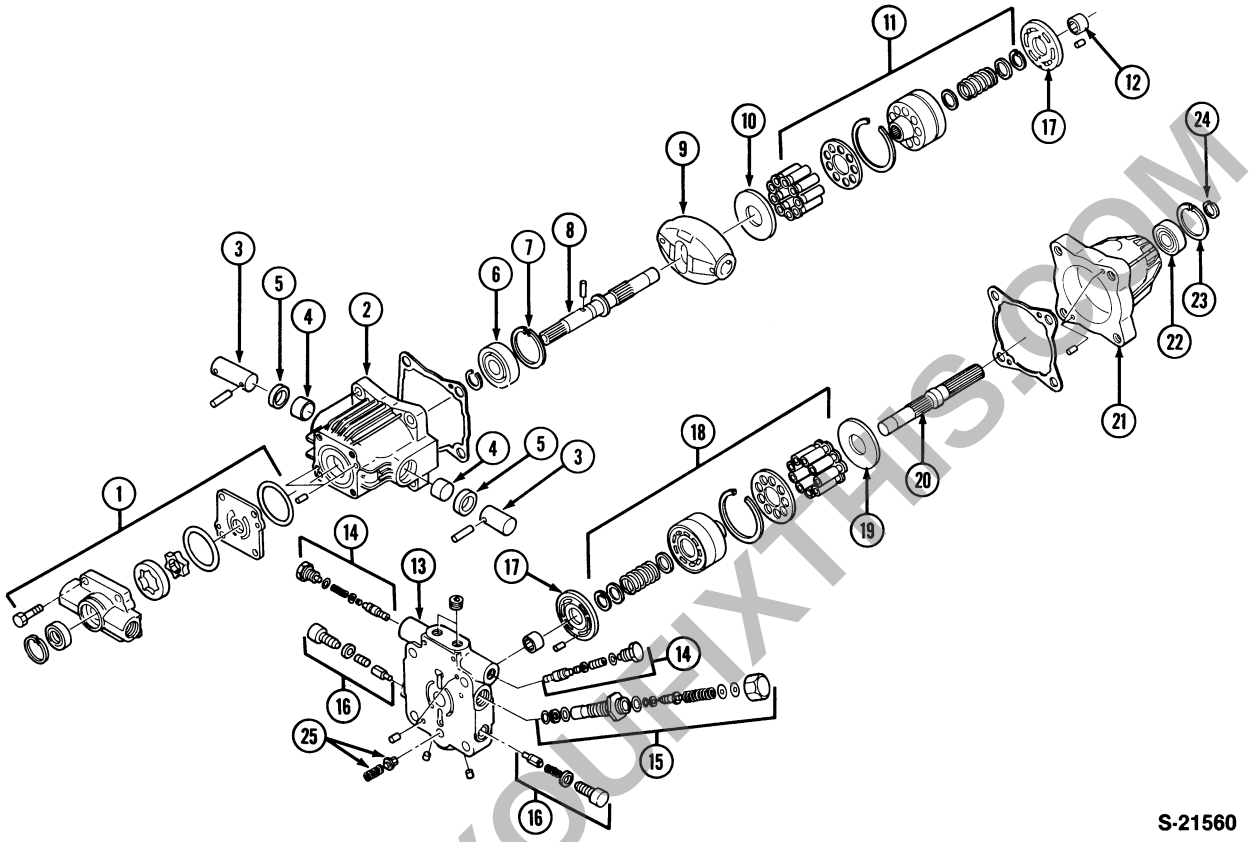

Figure 45
Hydrostatic Transmission Assembly

1. Charge Pump Assembly
2. Piston Pump Case
3. Trunnion Pin
4. Bushing (2)
5. Seal (2)
6. Bearing
7. Snap Ring
8. Shaft—Input
9. Variable Swash Plate
10. Thrust Plate
11. Piston Pump Assembly
12. Needle Bearing (2)
13. Port Block
14. Neutral Valve Assembly (2)
15. High Pressure Relief Valve
16. Feed Valve Assembly (2)
17. Valve Plate
18. Piston Pump Assembly
19. Thrust Plate
20. Shaft—Output
21. Piston Motor Case
22. Bearing
23. Snap Ring
24. Snap Ring
25. Low Pressure Regulating Valve

PREVIEW - YOUFIXTHIS.COM

Download full manual at youfixthis.com

PART 1
ENGINE

Chapter 1
ENGINE AND LUBRICATION SYSTEM

Section		Page
A.	DESCRIPTION AND OPERATION	1
B.	ENGINE OVERHAUL	
	• CYLINDER HEAD, VALVES AND RELATED COMPONENTS	10
	• ENGINE FRONT COVER, TIMING GEARS, OIL PUMP AND CAMSHAFT	19
	• CONNECTING RODS, BEARINGS, PISTONS AND CYLINDER BLOCK	27
	• MAIN BEARINGS, CRANKSHAFT AND FLYWHEEL	35

Chapter 2
COOLING SYSTEM

Section		Page
A.	DESCRIPTION AND OPERATION	43
B.	OVERHAUL	45

Chapter 3
TROUBLE SHOOTING, SPECIFICATIONS AND SPECIAL TOOLS

Section		Page
A.	TROUBLE SHOOTING	51
B.	SPECIFICATIONS	55
C.	SPECIAL TOOLS	62
D.	COMPRESSSION TEST AND TOOLS	62

PREVIEW - YOUFIXTHIS.COM

Download full manual at youfixthis.com

UNIT PRODUCTION CODE:

First Number YEAR	First Letter MONTH	Second Number DAY OF MONTH	Second Letter PRODUCTION SHIFT
1 — 1981 2 — 1982 3 — 1983 4 — 1984 5 — 1985 0 — 1990	A — Jan. G — July B — Feb. H — Aug. C — March J — Sept. D — April K — Oct. E — May L — Nov. F — June M — Dec.	01/28/29/30/31	A — Midnight B — Day C — Afternoon

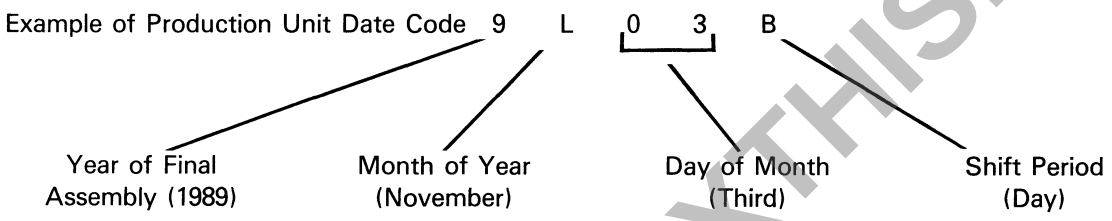

PREVIEW - YOUFIXTHIS.COM

Download full manual at youfixthis.com

PART 3
ELECTRICAL SYSTEM

Chapter 4
CHARGING SYSTEM

Section		Page
A.	DESCRIPTION AND OPERATION	39
B.	TEST PROCEDURES	41

A. DESCRIPTION AND OPERATION

The alternator, Figure 77, is a permanent magnet type alternator having a fixed magnetic field. The alternator does not have rectifying diodes and produces alternating current to the regulator.



Figure 77
Alternator Assembly

The alternator consists of a stator, armature coil and plate and a flywheel with permanent magnets attached, Figure 78.

The regulator assembly, Figure 79, is a current rectifier and voltage regulator unit. The regulator controls the voltage output to maintain the system at 14-15 volts.

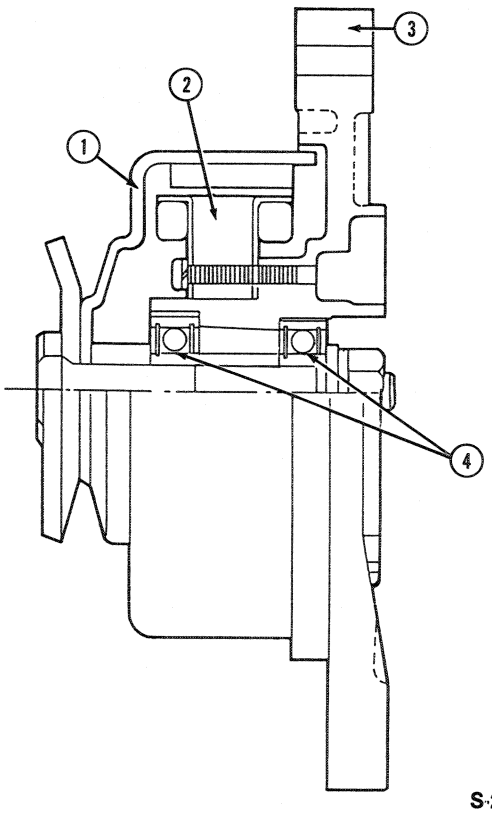

Figure 78
Alternator Components

1. Flywheel and Magnets
2. Stator
3. Plate
4. Bearings

PREVIEW - YOUFIXTHIS.COM

Download full manual at youfixthis.com

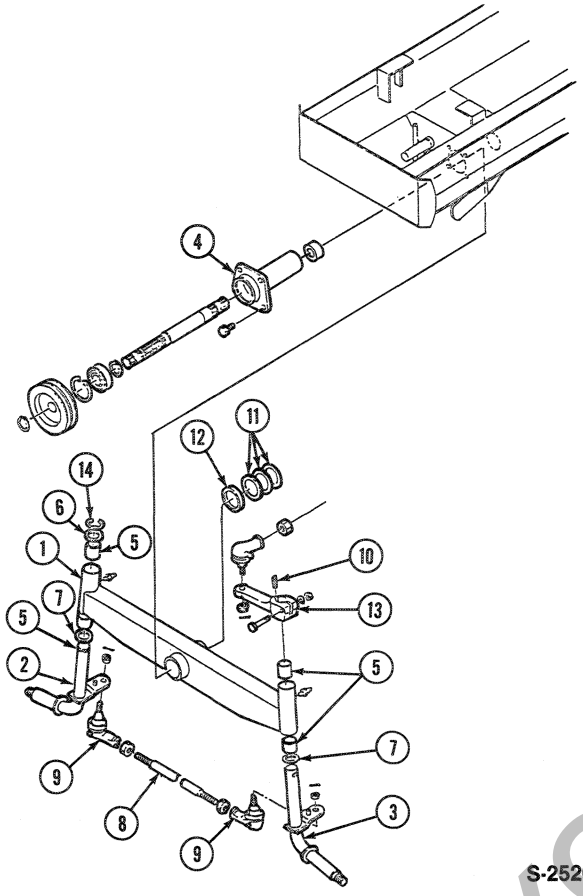

Figure 3
Front Axle Components

1. Axle
2. Spindle — R.H.
3. Spindle — L.H.
4. Pivot
5. Bushing (4)
6. Washer
7. Washer (2)
8. Tie-Rod
9. Tie-Rod End
10. Key
11. Shims
12. Spacer
13. Spindle Arm
14. Snap Ring

B. OVERHAUL

STEERING GEAR REMOVAL

Remove the air intake screens, center panel, instrument panel and radiator and support assembly from the tractor. See "Engine Removal," Section B, Part 1, for detailed description.

1. Disconnect the electrical wiring from the tractor.
   - Temperature sender wire.
   - Starter motor wires.
   - Alternator wires.
   - Oil pressure sender wire.
   - Glow plug terminal wire.
   - Injection pump solenoid wire.
   - Headlamp wiring connectors.
2. Disconnect the proofmeter cable from the meter.
3. Remove the "E" clip and disconnect the throttle cable from the injection pump.
4. Disconnect the PTO cable from the idler pulley bracket. See "Engine Removal," Section B, Part 1, for detailed description.
   - Remove the lower tension spring.
   - Unhook the upper tension spring.
   - Remove the control cable lower conduit nut and remove the cable and conduit from the bracket.
5. Remove the steering wheel.
6. Remove the roll pins from the speed control and PTO control levers (1) and (2) and remove the levers, Figure 4.

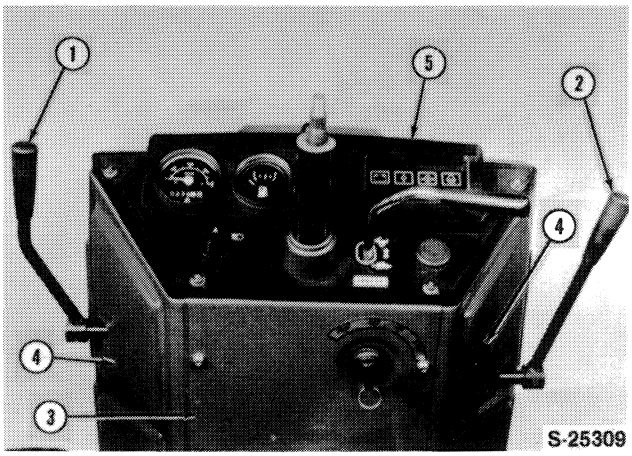

Figure 4
Instrument Panel Removal

1. PTO Control Lever
2. Speed Control Lever
3. Center Panel
4. Air Intake Screens
5. Instrument Panel

PREVIEW - YOUFIXTHIS.COM

Download full manual at youfixthis.com

PREVIEW ONLY

You're viewing 11 of 288 pages

The full manual includes:

- All 288 pages, complete
- Searchable PDF (find any keyword)
- No watermarks
- Instant download
- Print-ready quality

GET FULL MANUAL NOW

Ford LGT 14D, LGT 16D Service Manual

Scan or click anywhere
youfixthis.com

Click anywhere on this page to get the full manual