Operation

Think Safety First

Please carefully read all the safety instructions on pages 2–7. Knowing this information could help you, your family, pets or bystanders avoid injury.

Controls

Become familiar with all the controls (Fig. 1) before you start the engine and operate the machine.

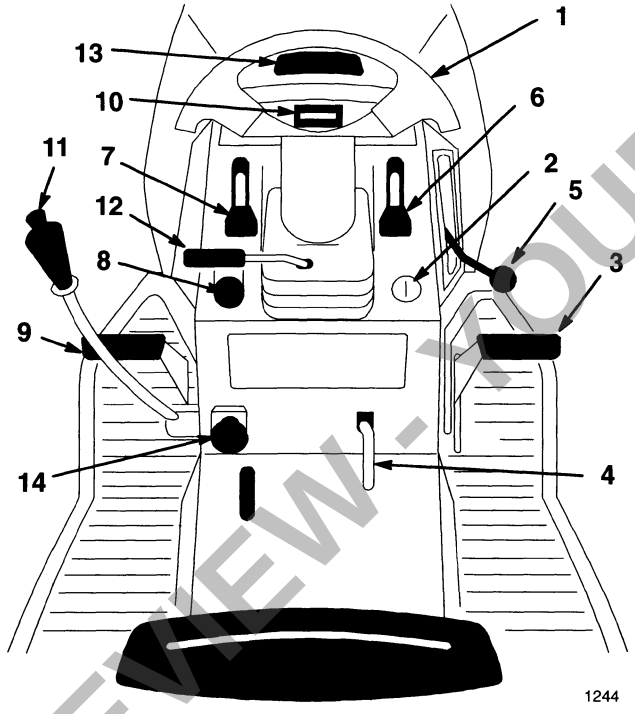

Figure 1

1. Steering wheel
2. Ignition switch
3. Brake pedal
4. Parking brake lever
5. Ground speed selector
6. Throttle lever
7. Choke lever
8. Power take off (PTO)
9. Clutch pedal
10. Indicator control module/Hourmeter
11. Attachment lift lever
12. Tilt wheel lever
13. Hood opening
14. Dial-a-height knob

Parking Brake

Always set the parking brake when you stop the machine or leave it unattended.

While the ignition key is in the "RUN" or "LIGHTS" positions and the Parking Brake is engaged, the Parking Brake light, in the Indicator Module, will be lit.

Setting the Parking Brake

1. Push the brake pedal (Fig. 2) down and hold it in the depressed position.
2. Lift the parking brake lever (Fig. 2) up and gradually take your foot off the brake pedal. The brake pedal should stay in the depressed (locked) position.

Releasing the Parking Brake

1. Push down on the brake pedal (Fig. 2). The parking brake lever should release.
2. Gradually release the brake pedal.

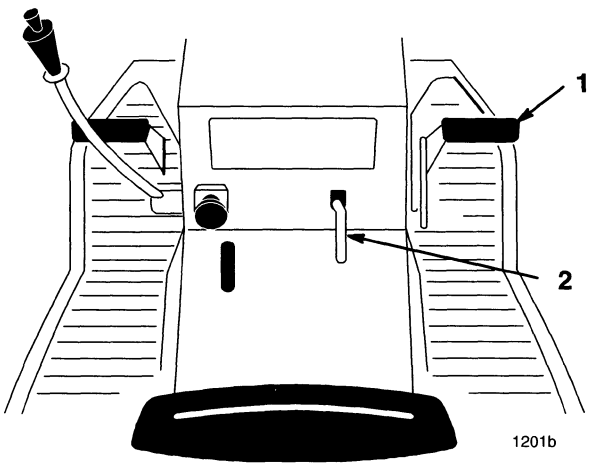

Figure 2

1. Brake pedal
2. Parking brake lever

PREVIEW - YOUFIXTHIS.COM

Download full manual at youfixthis.com

Attachment Lift Lever

The attachment lift lever (Fig. 10) is used to raise and lower various attachments.

Raising Attachments

1. Depress the brake pedal to stop the machine.
2. Pull attachment lift lever rearward until latch locks. In this position the lift will hold the attachment in the up, or raised position.

Lowering Attachments

1. Depress the brake pedal to stop the machine.
2. Pull attachment lift lever rearward, to release lift pressure, and push the button on top to release the latch. Move lift lever forward to lower attachment.

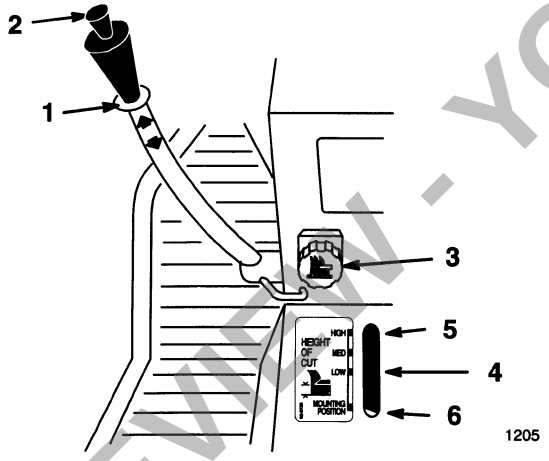

Figure 10

1. Lift lever
2. Button
3. Dial-A-Height
4. Indicator
5. High
6. Mounting position

Adjusting Dial-A-Height

The Dial-A-Height control (Fig. 10) is used to limit the downward travel of the attachment. The Dial-A-Height knob is rotated to change the location of this stop, up or down.

1. Raise the attachment lift lever: Refer to Raising Attachments. In the raised position the Dial-A-Height knob (Fig. 10) can be rotated to change the stop location. Turn right to raise and left to lower the height of the attachment.
2. The Dial-A-Height indicator (Fig. 10) will show the change, high to low, in attachment lift height as adjustment is made.

PREVIEW - YOUFIXTHIS.COM

Download full manual at youfixthis.com

2. Paper Element

   A. Lightly tap the element on a flat surface to remove dust and dirt (Fig. 16).

   B. Inspect the element for tears, an oily film, and damage to the rubber seal.

IMPORTANT: Never clean the paper element with pressurized air or liquids, such as solvent, gas, or kerosene. Replace the paper element if it is damaged, defective, or cannot be cleaned thoroughly.

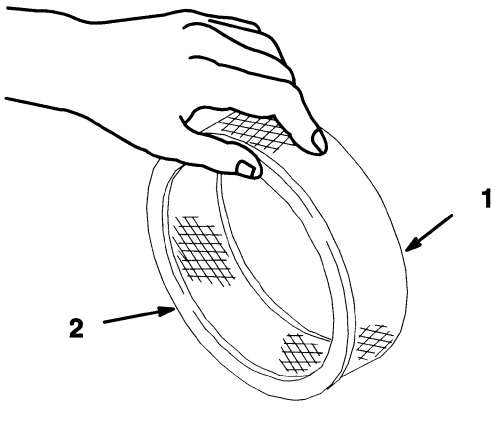

Figure 16

1. Paper element
2. Rubber seal

Installing the Foam and Paper Elements

IMPORTANT: To prevent engine damage, always operate the engine with the complete foam and paper air cleaner assembly installed.

1. Carefully slide the foam element onto the paper air cleaner element (Fig. 14).
2. Slide the air cleaner assembly and cover onto the long rod. Now screw the cover nut finger-tight against the cover (Fig. 14).

   Note: Make sure the rubber seal is flat against the air cleaner base and cover.

3. Install the air cleaner cover (Fig. 14).
4. Close the hood.

PREVIEW - YOUFIXTHIS.COM

Download full manual at youfixthis.com

Greasing and Lubrication

Service Interval/Specification

Grease the machine after every 50 operating hours or yearly, whichever occurs first. Grease more frequently when operating conditions are extremely dusty or sandy.

Grease Type: General-purpose grease.

How to Grease

1. Disengage the power take off (PTO), set the parking brake, and turn the ignition key to "OFF" to stop the engine. Remove the key.
2. Clean the grease fittings with a rag. Make sure to scrape any paint off the front of the fitting(s).
3. Connect a grease gun to the fitting. Pump grease into the fittings until grease begins to ooze out of the bearings.
4. Wipe up any excess grease.

Where to Add Grease

1. Lubricate the front wheels and spindles until grease begins to ooze out of the bearings (Fig. 22).
2. Lubricate the front axle pivot (Fig. 22).

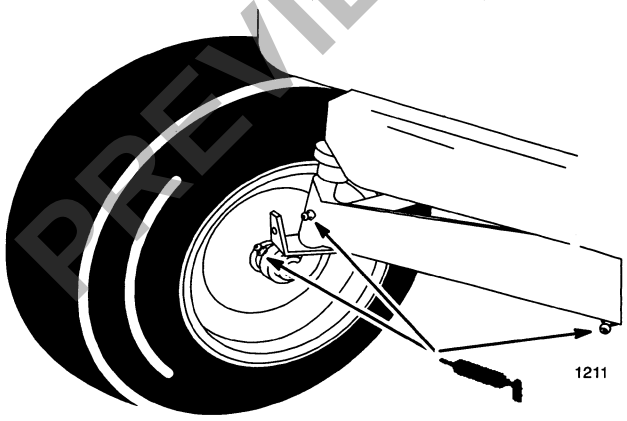

Figure 22

3. Lubricate the traction control pedal on hydrostatic models (or brake and clutch pedals on gear drive models) where they pivot on mounting shaft (Fig. 23).

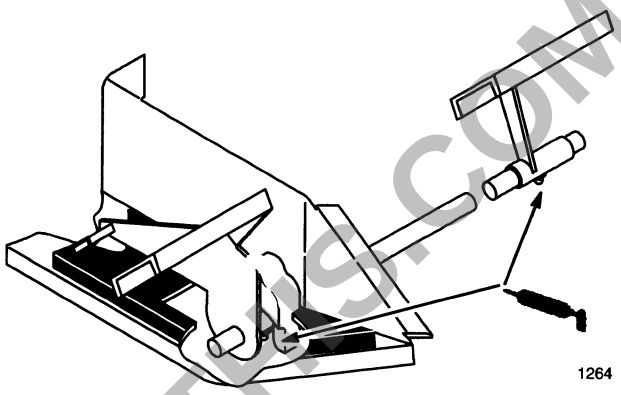

Figure 23

PREVIEW - YOUFIXTHIS.COM

Download full manual at youfixthis.com

Brake

The brake is on the right side of the rear axle, inside the rear tire (Fig. 25). If the brake does not hold securely or stopping power is insufficient, an adjustment is required.

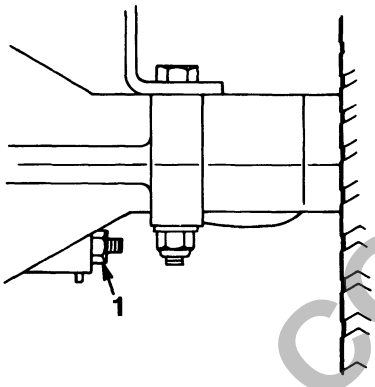

Figure 25

1. Lock nut

Checking the Brake

1. Park the machine on a level surface, disengage the power take off (PTO), shift into neutral, set the parking brake, and turn the ignition key to "OFF" to stop the engine. Remove the key.
2. If the rear wheels lock and skid when you push the tractor forward, no adjustment is required. An adjustment is required if the wheels turn and do not lock; refer to Adjusting the Brake, page 24.

Adjusting the Brake

1. Check the brake before you adjust it; refer to Checking the Brake, page 24.
2. To increase braking resistance, tighten the brake adjusting nut (Fig. 25) 1/8 turn clockwise; then check the brake again. Continue this adjusting and checking process until the brake is set properly.
3. Push down on the brake pedal to release the parking brake.

   IMPORTANT: With the parking brake released, the rear wheels must rotate freely when you push the tractor. If the brake seems to "drag," loosen the adjusting nut slightly until the wheels rotate freely. If both conditions cannot be achieved, contact an authorized service dealer immediately.

PREVIEW - YOUFIXTHIS.COM

Download full manual at youfixthis.com

Fuel Tank

Draining The Fuel Tank

⚠ DANGER

POTENTIAL HAZARD
- **In certain conditions gasoline is extremely flammable and highly explosive.**

WHAT CAN HAPPEN
- **A fire or explosion from gasoline can burn you, others, and cause property damage.**

HOW TO AVOID THE HAZARD
- **Drain gasoline from the fuel tank when the engine is cold. Do this outdoors in an open area. Wipe up any gasoline that spills.**
- **Never drain gasoline near an open flame or where gasoline fumes may be ignited by a spark.**
- **Never smoke a cigarette, cigar or pipe.**

1. Park the machine on a level surface, to assure fuel tank drains completely. Then disengage the power take off (PTO), set the parking brake, and turn the ignition key to "OFF" to stop the engine. Remove the key.
2. Close fuel shut–off valve at fuel tank (Fig. 26).

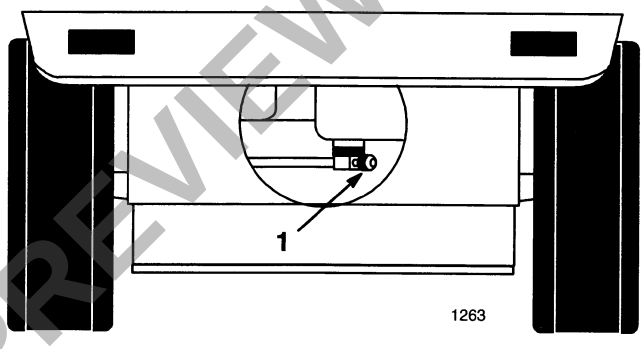

Figure 26

1. Fuel shut-off valve

3. Open the hood.
4. Squeeze the ends of the hose clamp together and slide it up the fuel line toward the fuel tank (Fig. 27).
5. Pull the fuel line off the filter (Fig. 27). Open fuel shut-off valve and allow gasoline to drain into an approved gas can.

   Note: Now is the best time to install a new fuel filter because the fuel tank is empty.
6. Install the fuel line onto the filter. Slide the hose clamp close to the filter to secure the fuel line and filter. Refer to Replacing the Fuel Filter; page 26.

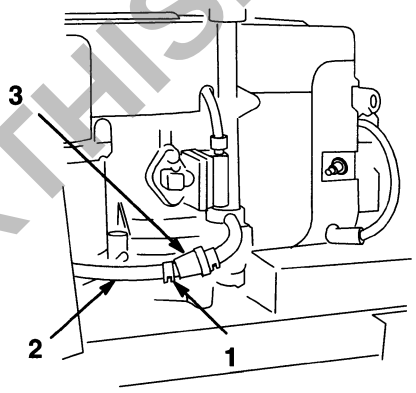

Figure 27

1. Hose clamp
2. Fuel line
3. Filter

PREVIEW - YOUFIXTHIS.COM

Download full manual at youfixthis.com

OWNER ASSISTANCE

We at Ford New Holland and your Ford New Holland dealer want you to be completely satisfied with your investment. Normally any problems with your equipment will be handled by your dealer's Service Department. Sometimes, however, misunderstanding can occur. If your problem has not been handled to your satisfaction, we suggest the following.

1. Contact the owner or General Manager of the dealership, explain the problem, and request assistance. When additional assistance is needed, the dealer has direct access to our branch office.
2. If you cannot obtain satisfaction by doing this, contact the Ford New Holland branch office in your area and provide them with:

    - Your name, address, and telephone number
    - Machine model and serial number
    - Dealership name and address
    - Machine purchase date and amount of use
    - Nature of problem

Atlanta
2000 Mountain Ind. Blvd.
Tucker, GA 30084
Telephone: (404) 723–3615
States: AL, FL, GA, KY, MS, NC, SC, TN, VA

Dallas
P.O. Box 10227
Dallas, TX 75207
Telephone: (214) 939–4919
States: AR, AZ, CA, CO, HI, KS, LA, MO, NM, NV, OK, TX, UT

Minneapolis
P.O. Box 1342
Minneapolis, MN 55440
Telephone: (612) 887–4232
States: AK, IA, ID, IL, MN, MT, ND, NE, OR, SD, WA, WI, WY

New Holland
500 Diller Avenue
New Holland, PA 17557
Telephone: (717) 285–8302
States: CT, DE, IN, MA, MD, ME, MI, NH, NJ, NY, OH, PA, RI, VT, WV

Calgary
Box 1616, Main P.O.
Calgary, AB
CANADA T2P 2M7
Telephone: (403) 569–3208

3. If you need further assistance contact:

    Service Department
    Mail Station 500
    Ford New Holland, Inc.
    New Holland, PA 17557

When contacting Ford New Holland's branch office or Service Department, be aware that your problem will likely be resolved in the dealership using the dealer's facilities, equipment, and personnel. So it is important that your initial contact be with the dealer.

A Service Publications Catalog & Order Form is available which lists the operator's and service manuals for many prior model and most current model Ford-New Holland-Versatile tractors, equipment, and consumer products. To obtain a copy of this catalog, please call 1–800–635–4913.

PREVIEW - YOUFIXTHIS.COM

Download full manual at youfixthis.com

Safety

This machine meets or exceeds the B71.1–1990 specifications of the American National Standards Institute, in effect at the time of production. However, improper use or maintenance by the operator or owner can result in injury. To reduce the potential for injury, comply with these safety instructions and always pay attention to the safety alert ⚠ symbol, which means CAUTION, WARNING, or DANGER—"personal safety instruction." Failure to comply with the instruction may result in personal injury or death.

Safe Operating Practices

This product is capable of amputating hands and feet and throwing objects. Always follow all safety instructions to avoid serious injury or death.

⚠ WARNING

POTENTIAL HAZARD

- **Engine exhaust contains carbon monoxide, which is an odorless, deadly poison.**

WHAT CAN HAPPEN

- **Carbon monoxide can kill you and is also known to the State of California to cause birth defects.**

HOW TO AVOID THE HAZARD

- **Do not run engine indoors or in an enclosed area.**

General Operation

1. Read, understand, and follow all instructions in the operator's manual and on the machine before starting.
2. Allow only responsible adults who are familiar with the instructions to operate the machine.
3. Clear the area of objects such as rocks, toys, wire, etc., which could be picked up and thrown by the blade.
4. Be sure the area is clear of other people before mowing. Stop the machine if anyone enters the area.
5. Never carry passengers.
6. Do not mow in reverse unless absolutely necessary. Always look down and behind before and while backing.
7. Be aware of the mower discharge direction and do not point it at anyone. Do not operate the mower without either the entire grass catcher or the guard in place.
8. Slow down before turning. Sharp turns on any terrain may cause loss of control.
9. Never leave a running machine unattended. Always turn off blades, set parking brake, stop engine, and remove key before dismounting.
10. Turn off blades when not mowing.
11. Keep hands, feet, hair and loose clothing away from attachment discharge area, underside of mower and any moving parts while engine is running.
12. Stop the engine before removing the grass catcher or unclogging the chute.

PREVIEW - YOUFIXTHIS.COM

Download full manual at youfixthis.com

PREVIEW ONLY

You're viewing 8 of 44 pages

The full manual includes:

- All 44 pages, complete
- Searchable PDF (find any keyword)
- No watermarks
- Instant download
- Print-ready quality

GET FULL MANUAL NOW

Ford LS25-12.5G, 9861897 Operator Manual

Scan or click anywhere
youfixthis.com

Click anywhere on this page to get the full manual