FOREWORD

Appropriate service methods and correct repair procedures are essential for the safe, reliable operation of all equipment, as well as the personal safety of the individual performing the repair.

This Service Manual provides troubleshooting, overhaul, and pressure-testing instructions using recommended procedures and equipment. Following these instructions will ensure the safe, efficient, and timely completion of the service or repair.

There are numerous variations in procedures, techniques, tools, and parts for servicing machines, as well as in the skill of the individual doing the work. This manual cannot possibly anticipate all such variations and provide advice or cautions as to each. Accordingly, anyone who departs from the instructions provided in this manual must first establish that their personal safety, the safety of others, and the integrity of the machine will not be compromised by the choice of methods, tools or parts.

The manual is divided into sections which are subdivided into chapters. Each chapter contains information on general operating principles, detailed inspection, overhaul and, where applicable, specific troubleshooting, special tools, and specifications.

Any reference in this manual to right, left, rear, front, top, or bottom is as viewed from the operator's seat, looking forward.

All data and illustrations in this manual are subject to variations in build specification. This information was correct at the time of issue, but New Holland policy is one of continuous improvement, and the right to change specifications, equipment, or design at any time, without notice, is reserved.

PREVIEW - YOUFIXTHIS.COM

Download full manual at youfixthis.com

4. Inspect cylinder head for nicks and burrs on mating face, Remove using a suitable abrasive and ensure faces are clean after repair.

5. Using a straight edge and feeler gauges, check the flatness of the cylinder head in all directions does not exceed, 0.001 in (0.03mm) in any 1 in (25.4mm), or 0.005 in (0.127mm), overall limit Figure 1-1-29.

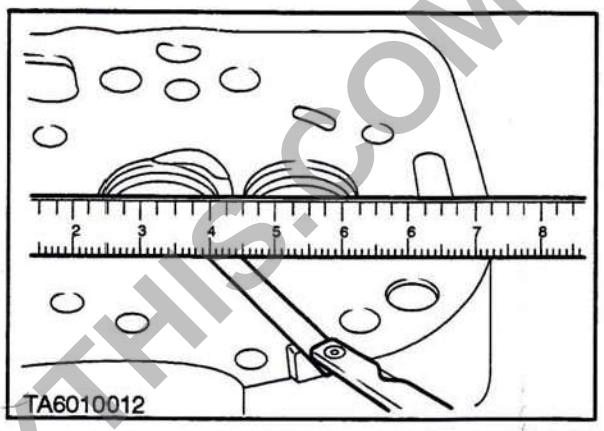

Figure 1-1-29

6. If the cylinder head has been resurfaced, determine all head bolt faces will seat by placing the cylinder head less gasket, on the cylinder block and installing bolts hand tight.

7. Ensure rocker shaft supports are fitted with long bolts. Using a feeler gauge, check clearance between underside of bolt heads and cylinder head or rocker shaft support.

8. If a 0.010 in (0.25mm) feeler gauge can be inserted under the bolt head the bolt has bottomed. Therefore the cylinder block thread must be increased using a 9/16–13 UNC–2A Thread tap. Identify the bolt heads and ensure they are reinstalled in the bolt holes they were checked in.

PREVIEW - YOUFIXTHIS.COM

Download full manual at youfixthis.com

SECTION 2
ELECTRICAL SYSTEM

CHAPTER 1
ELECTRICAL INTRODUCTION

CONTENTS

ELECTRICAL SYSTEM AND FUSES 2-1-2
CAB CONTROLS 2-1-7
SYSTEM PRECAUTIONS – BATTERY CHARGING AND WELDING 2-1-17
CAB SWITCHES – REMOVAL AND REPLACEMENT 2-1-18
CLUTCH PEDAL AND BRAKE PEDAL SWITCH ADJUSTMENTS 2-1-20
COMPONENT TESTING AND SPECIFICATIONS 2-1-21
TEMPORARY WIRING REPAIR 2-1-22
INDEX 2-9-230

PREVIEW - YOUFIXTHIS.COM

YouFixThis.com

Download full manual at youfixthis.com

CRITICAL ALARMS

COOLANT TEMPERATURE HIGH

With engine running:
Critical audible alarm, stop and left hand display will flash.

With engine off, key on:
The left hand display continues to display maximum bars and coolant symbol.

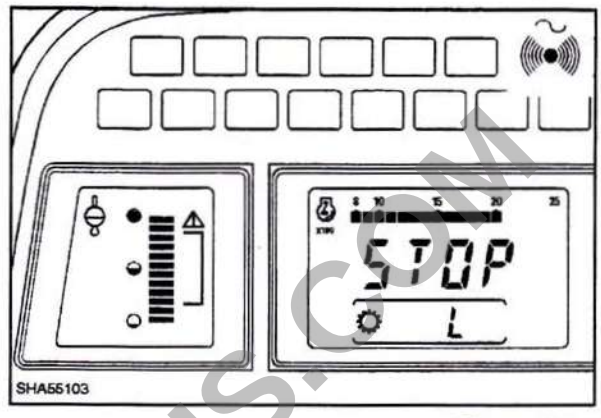

Figure 2-3-3

ENGINE OIL PRESSURE LOW

With engine running:
Critical audible alarm, stop and left hand display will flash. Alarm pressure function will vary with engine speed.

OIL PRESSURE		RPM	ALARM
Bar	lbf/in^2	Less than 500	OFF
0.6	8	500–1500	ON
1.1	16	1500–2000	ON
1.7	24	2000–3000	ON

With engine off, key on:
The left hand display continues to display minimum bars and oil pressure symbol.

NOTE: *If both coolant and oil pressure alarms are activated together, both symbols, high and low symbols and all 12 segments of left hand display flash.*

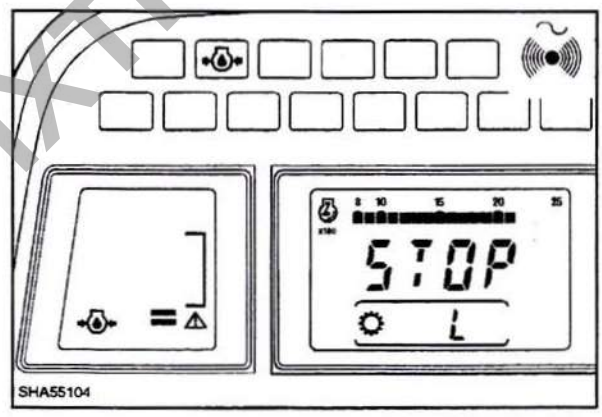

Figure 2-3-4

FUEL LEVEL LOW

Display and alarm are activated as bargraph changes from:–

3 to 2 Segments
2 to 1 Segment

Or when Key switched on (with low fuel).

5 second non critical alarm.

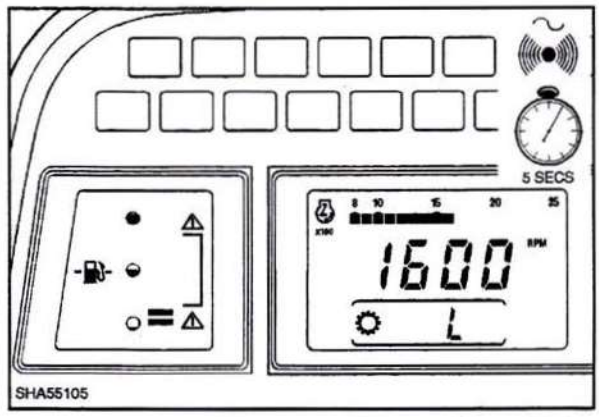

Figure 2-3-5

YouFixThis.com
Download full manual at youfixthis.com
PREVIEW - YOUFIXTHIS.COM

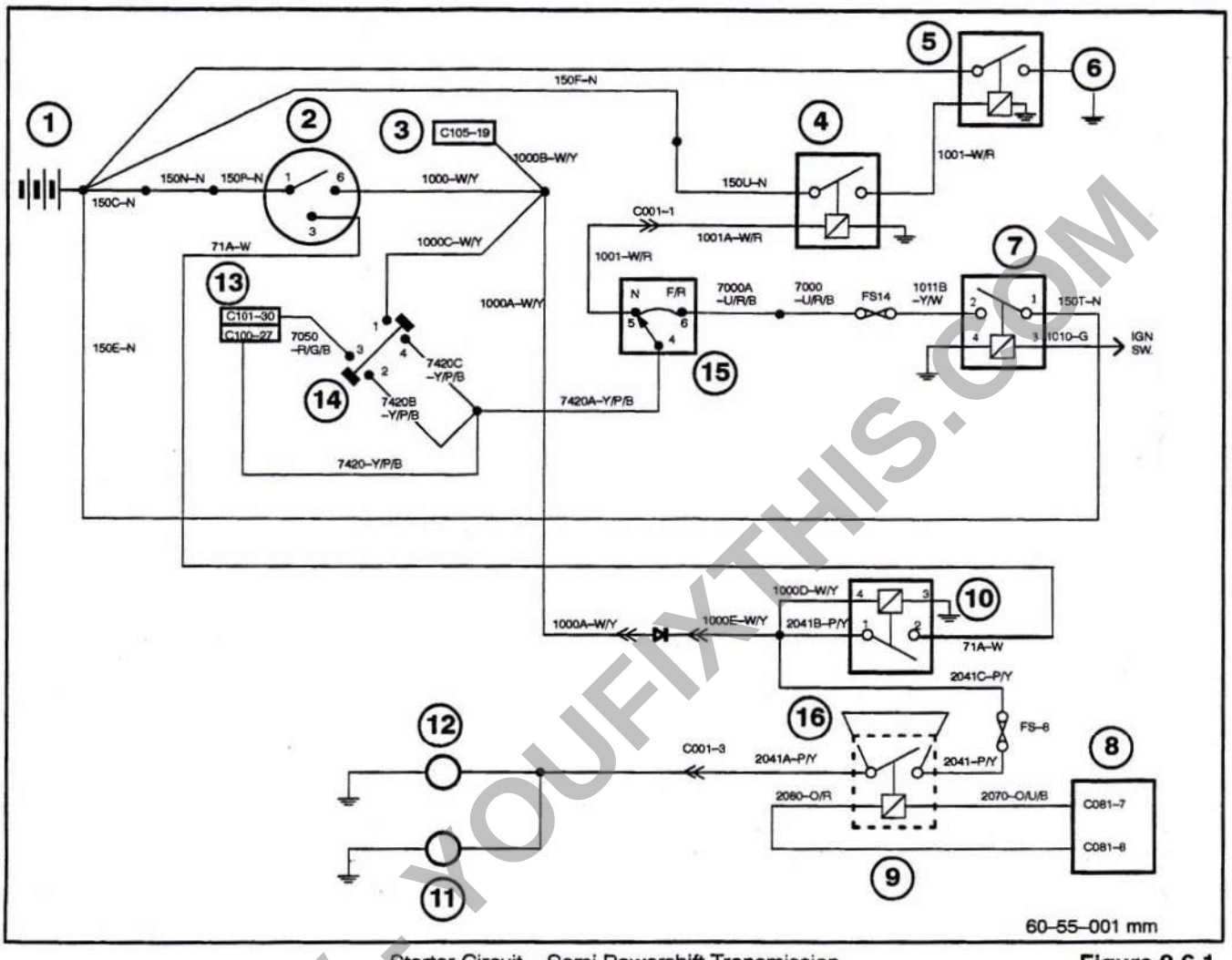

Starter Circuit – Semi Powershift Transmission **Figure 2-6-1**

NOTE: NOT USED IN NORTH AMERICA

1. Battery
2. Key Start Switch
3. Electronic Management Unit
4. Starter Relay
5. Starter Solenoid
6. Starter Motor
7. Ignition Relay
8. Digital Instrument Cluster
9. Fuel Shut–off Relay (Dealer Installed Accessory with Digital Instrument Cluster Only)
10. Relay V
11. Fuel Shut Off Solenoid
12. Electric Fuel Pump
13. Transmission Processor
14. Clutch Pedal Switch
15. Forward/Reverse Shuttle Switch
16. Bus Bar Link (Standard)

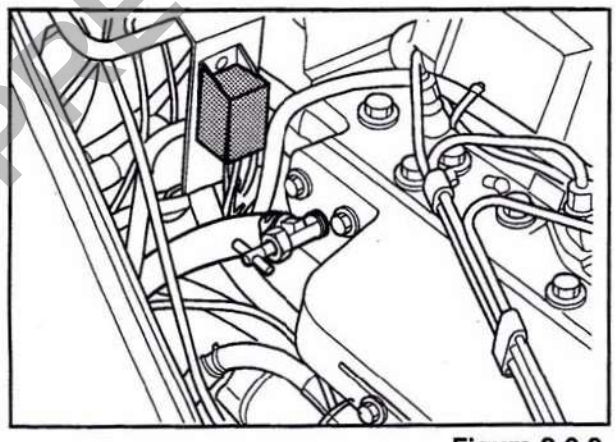

Figure 2-6-2
Starter Relay Location

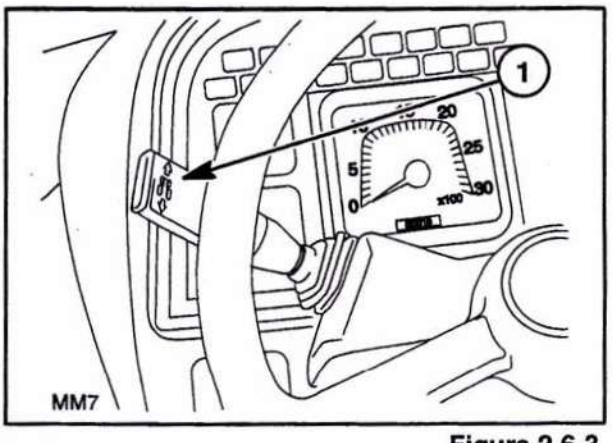

Figure 2-6-3
Shuttle Lever Switch

PREVIEW - YOUFIXTHIS.COM

YouFixThis.com
Download full manual at youfixthis.com

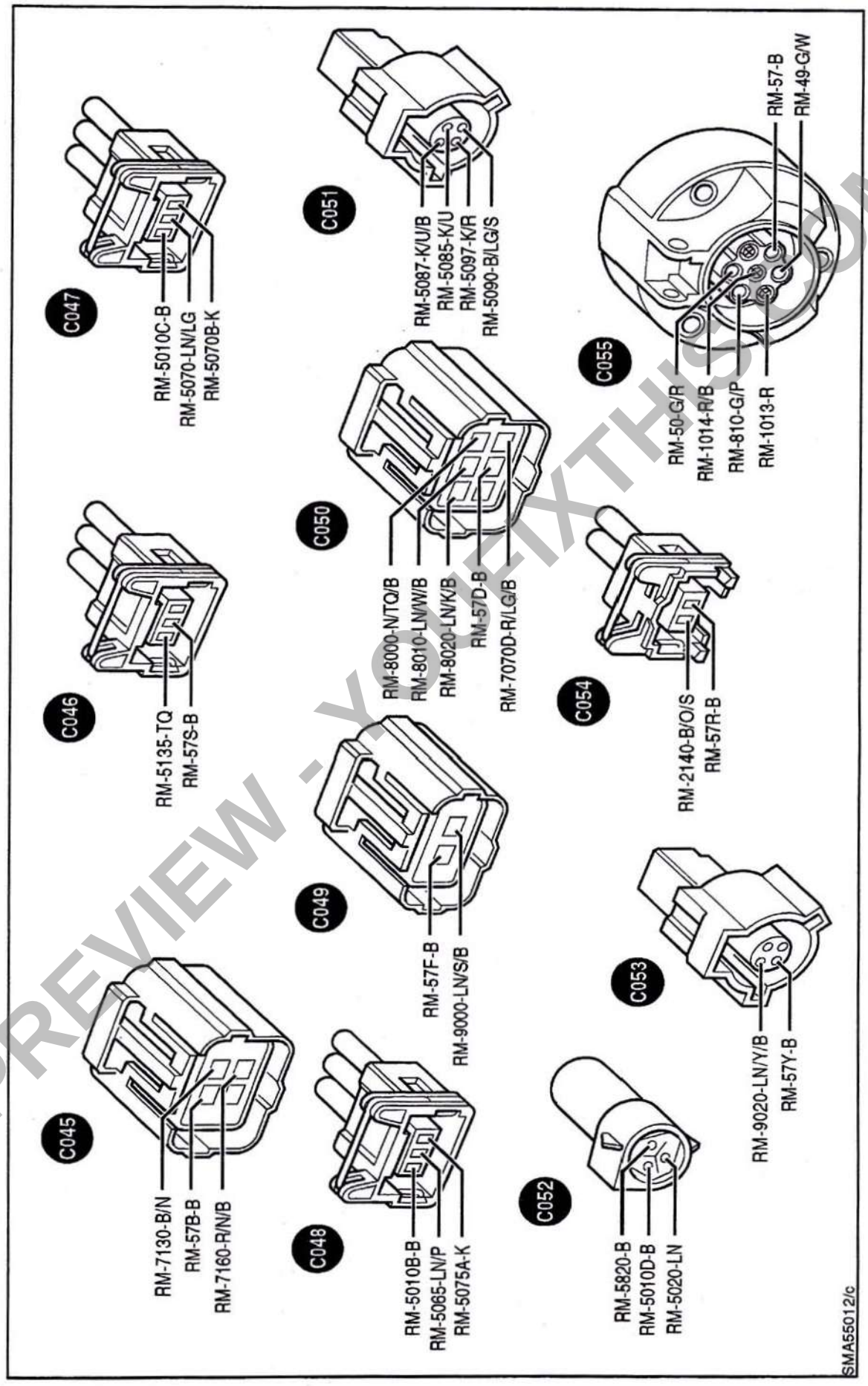

PREVIEW - YOUFIXTHIS.COM
YouFixThis.com
Download full manual at youfixthis.com

YouFixThis.com

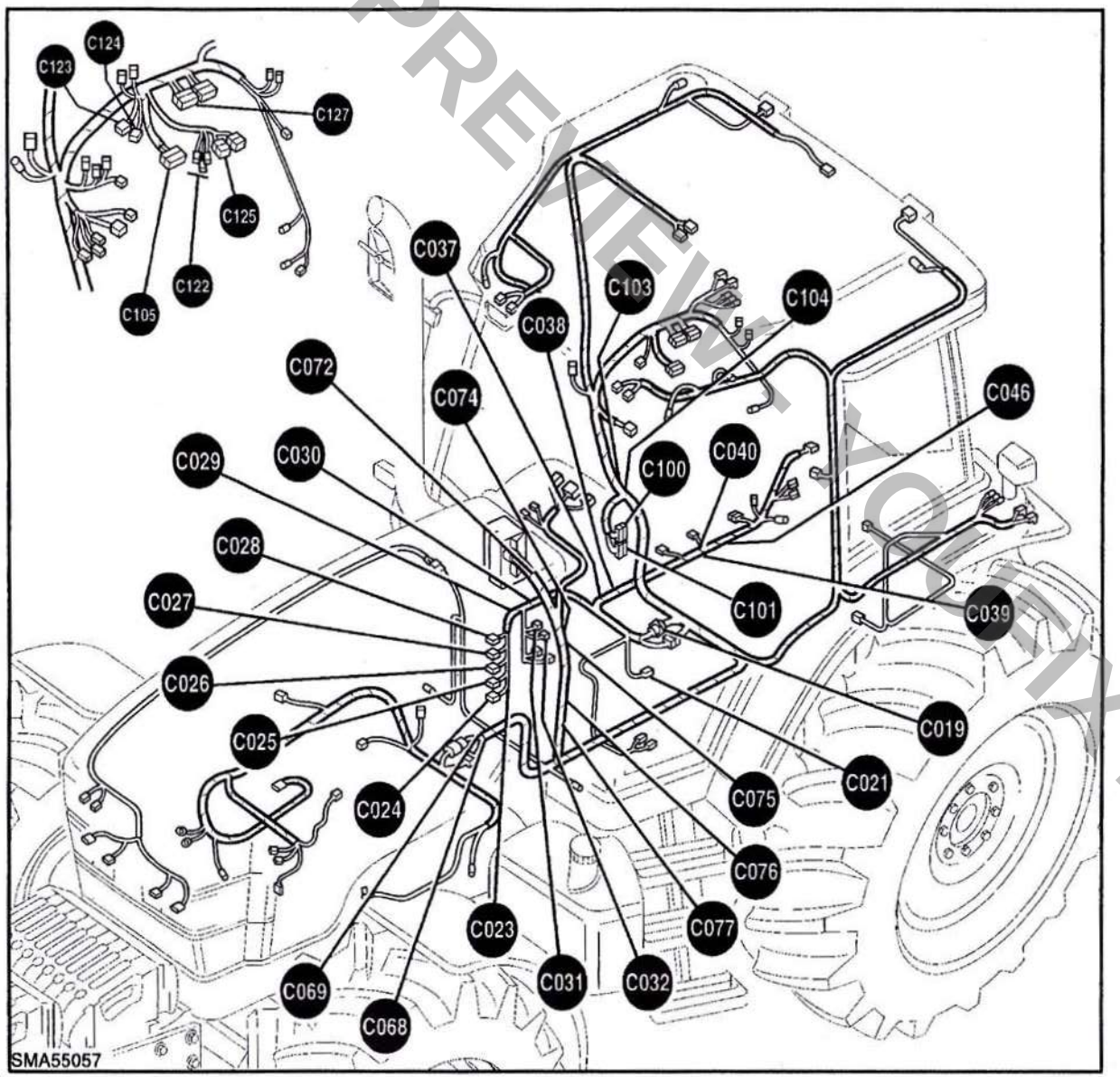

TRANSMISSION

C019 – Rear Main Extension Connector 1
C021 – Creeper Engaged Switch
C023 – Transmission Oil Temp Sender
C024 – Clutch E
C025 – Clutch D
C026 – Clutch C
C027 – Clutch B
C028 – Clutch A
C029 – Slow / Fast Potentiometer
C030 – Medium / Reverse Potentiometer
C031 – Medium Range Solenoid
C032 – Transmission Low Range Solenoid
C037 – Intermediate Speed P.U.
C038 – Output Speed P.U.
C039 – High Range Solenoid
C040 – Reverse Range Solenoid
C046 – Axle Speed Sensor
C068 – Radar
C069 – Starter Solenoid (Cab Main)
C072 – Starter Switch
C074 – Turn Switch
C075 – Shuttle Switch
C076 – Clutch Switch
C077 – Clutch Potentiometer
C100 – TCM Connector 1
C101 – TCM Connector 2
C103 – Gear Shift Connector
C104 – Gear Shift Indicator
C105 – EMU Connector
C122 – Ground Speed Sensor
C123 – Limp Home Connector 2
C124 – Limp Home Connector 1
C125 – Diagnostic Plug TCM
C127 – EDC Module

PREVIEW YOUFIXTHIS.COM

Download full manual at youfixthis.com

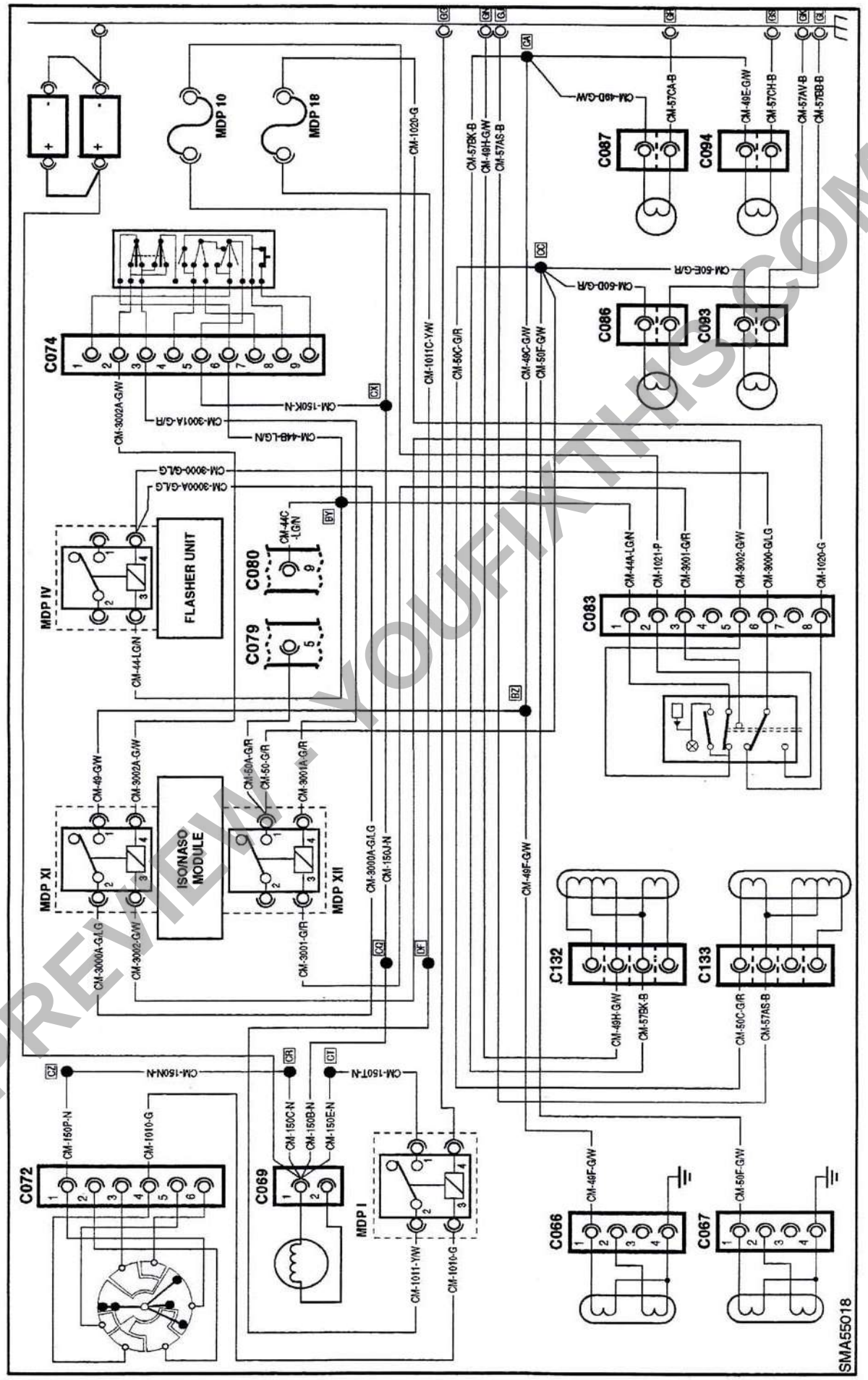

PREVIEW - YOUFIXTHIS.COM

Download full manual at youfixthis.com

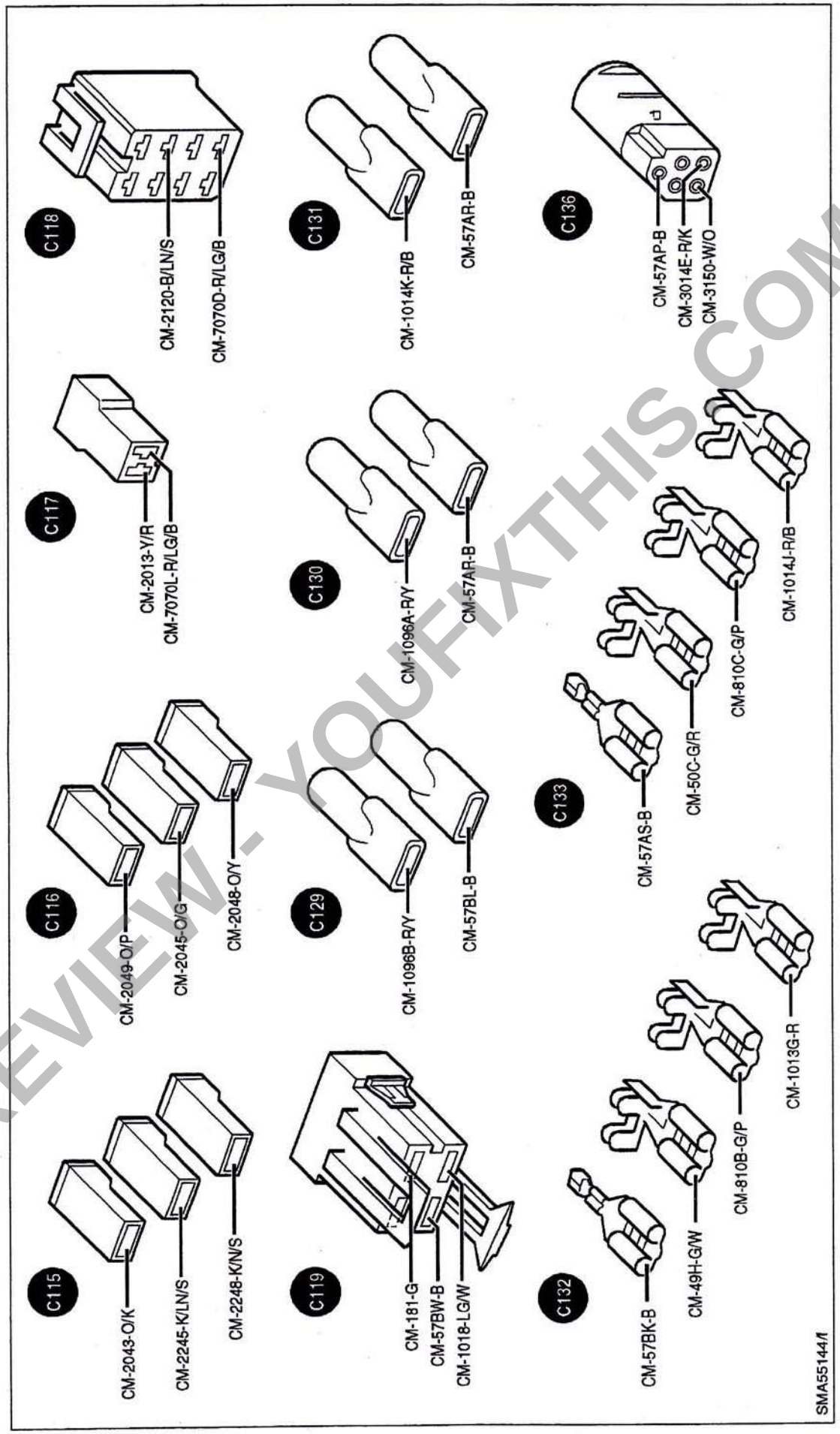

PREVIEW - YOUFIXTHIS.COM
YouFixThis.com
Download full manual at youfixthis.com

15. Unscrew the retaining nut and disconnect the throttle control cable (7) from the injection pump.

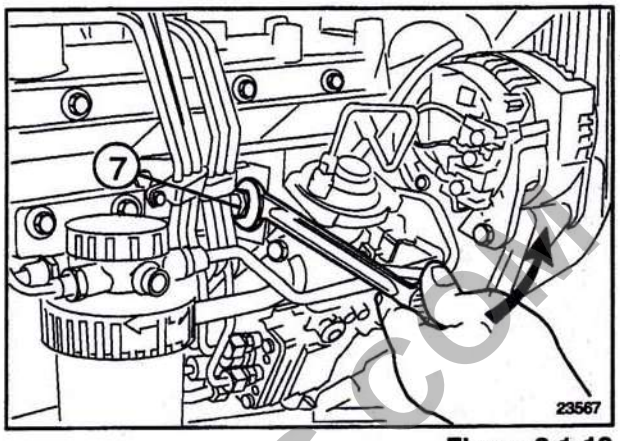

Figure 3-1-12

16. Disconnect the lines (5) connecting the hydrostatic steering motor to the steering hydraulic cylinders.

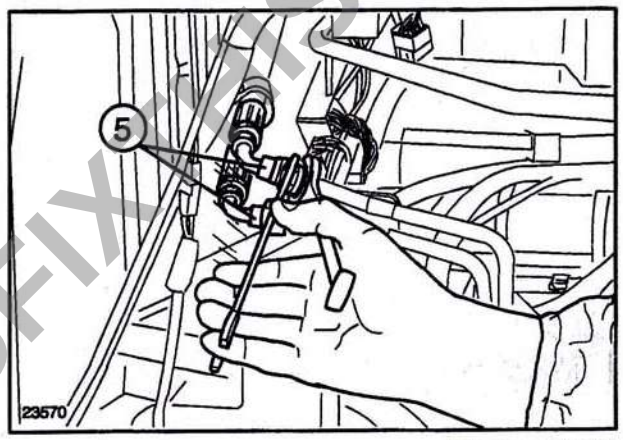

Figure 3-1-13

17. Loosen the clamp and disconnect the fuel supply line (1).

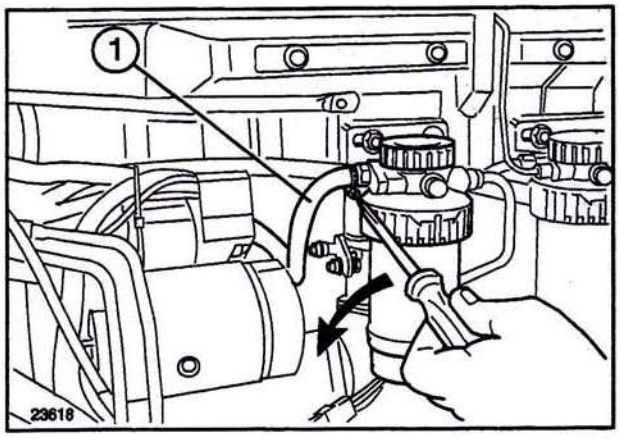

Figure 3-1-14

18. Loosen the clamp and disconnect the fuel return line (2) to tank.

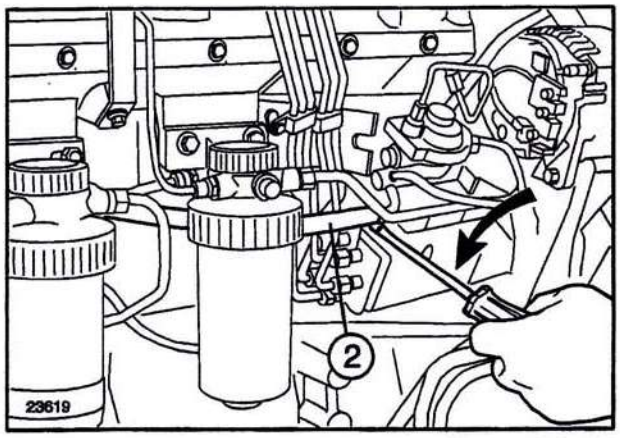

Figure 3-1-15

PREVIEW - YOUFIXTHIS.COM

Download full manual at youfixthis.com

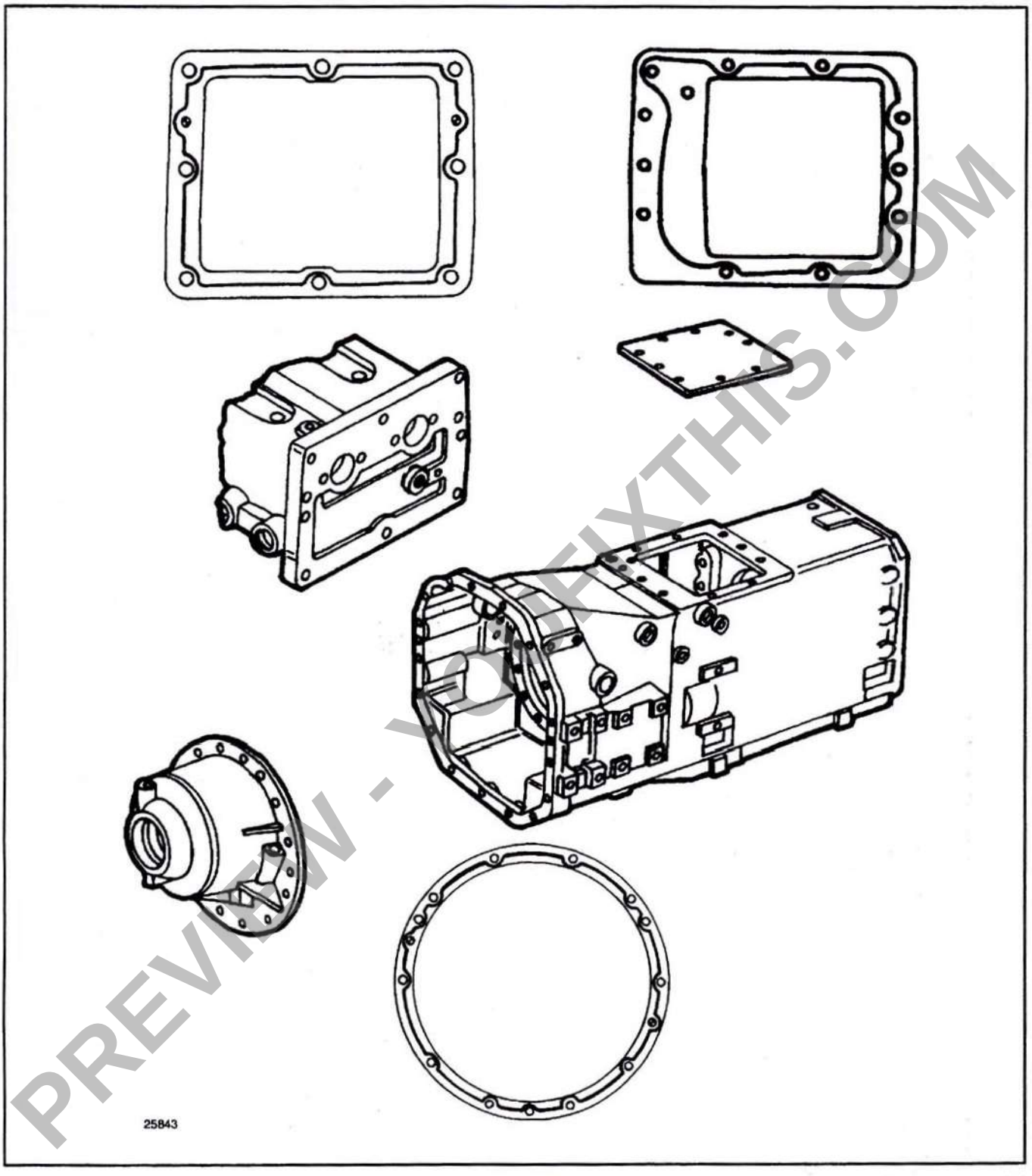

Figure 4-1-131

Pattern for application of sealant during installation of: range control valve housing, top cover, front cover of clutches A and B.

Sealants to be used are listed on page 0-1-19, Section 00.

PREVIEW - YOUFIXTHIS.COM

Download full manual at youfixthis.com

ERROR CODE F33
SYNCHRONIZER DID NOT DISENGAGE, SHUTTLE OR NEUTRAL
EFFECT – Transmission disabled

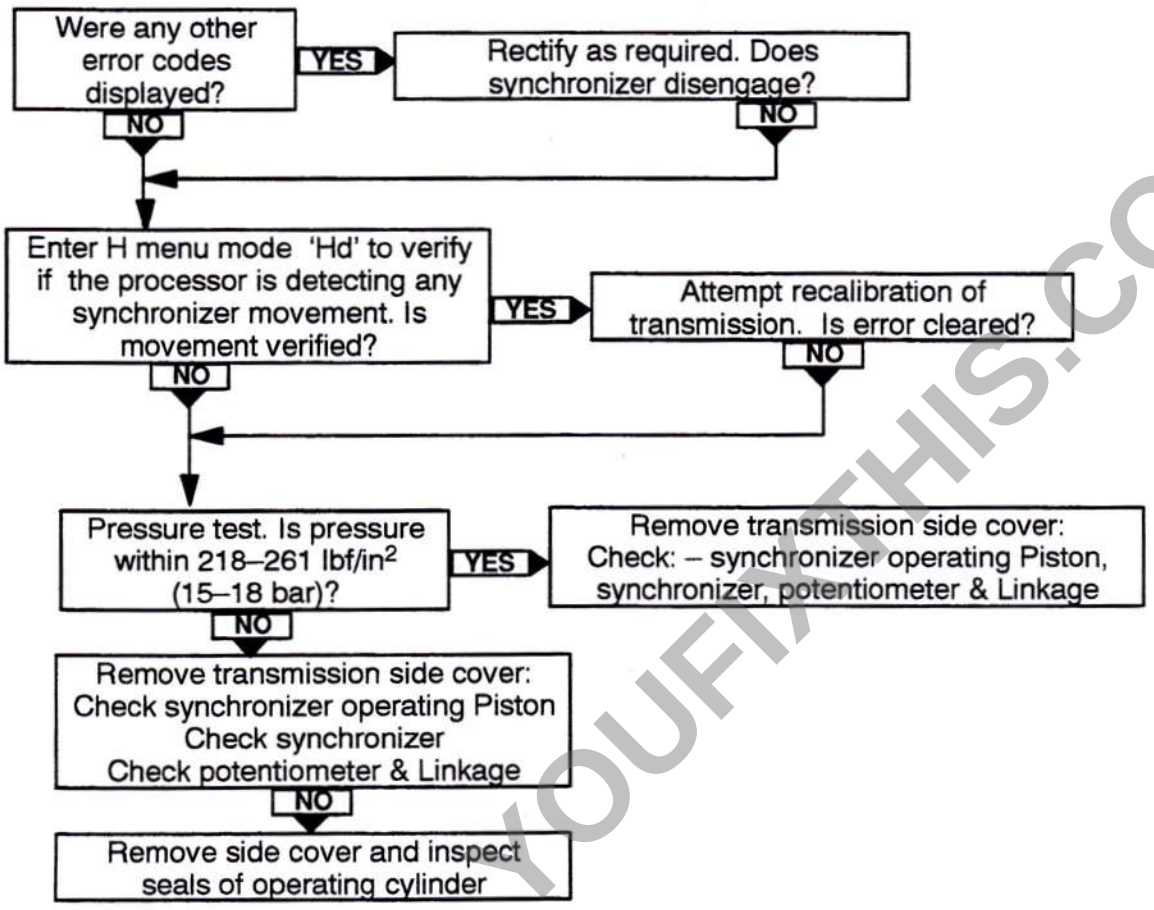

ERROR CODE F34
SYNCHRONIZER DID NOT DISENGAGE AFTER POWER UP. (PART OF START UP SEQUENCE)
EFFECT – Transmission disabled

If low oil pressure light is on repair low pressure circuit as described in hydraulic section.

Otherwise, cycle shuttle lever. If problem still persists a different error code will occur, probably F33. Refer to new error code page.

PREVIEW - YOUFIXTHIS.COM

YouFixThis.com
Download full manual at youfixthis.com

11. Remove the retaining ring (1) and withdraw clutch B bell housing (2).

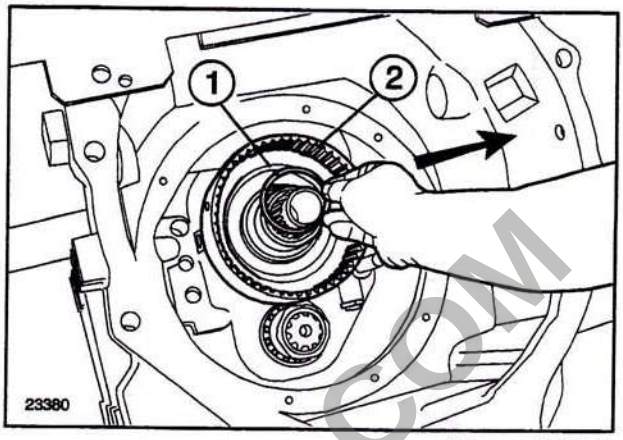

Figure 4-3-74

12. Loosen the lubrication line (4) fitting. Loosen screws retaining the cover (3) with the valve and remove cover.

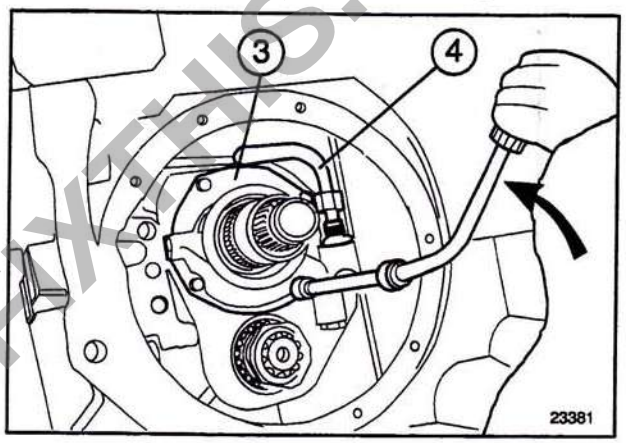

Figure 4-3-75

13. Remove lubrication oil outer fitting (5) and retrieve washer and seal. Retrieve the line (4) from inside the housing.

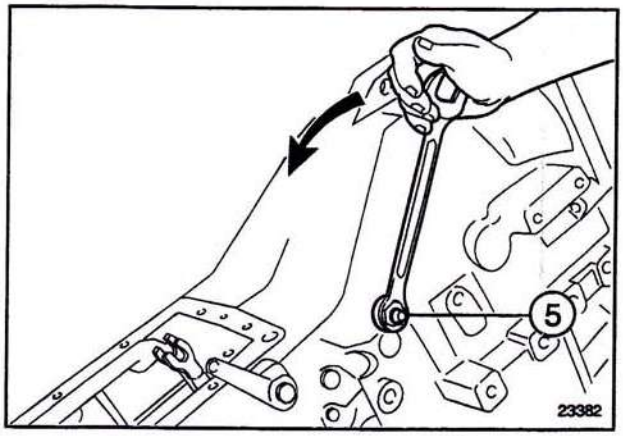

Figure 4-3-76

14. Loosen the cover (1) retaining screws, place tool no. **295049** (2) on the transmission housing, select low range, loosen the output shaft locknut using wrench tool no. **293343** (3) and retrieve cover (1).

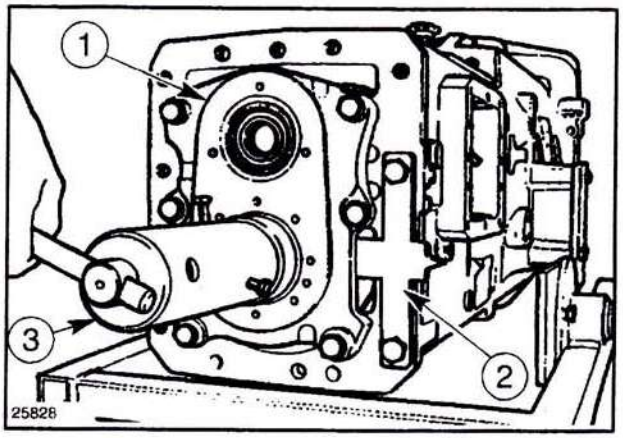

Figure 4-3-77

PREVIEW - YOUFIXTHIS.COM

Download full manual at youfixthis.com

ERROR CODES;
E38 – CLUTCH 'B' SOLENOID (HIGH/REVERSE) SHORT CIRCUIT
E39 – CLUTCH 'B' SOLENOID OPEN CIRCUIT
EFFECTS – Transmission disabled.

With the cab floor removed, disconnect connector C162 to Clutch B. With a suitable multimeter check the solenoid for open/short circuit. Is a solenoid fault indicated?

YES → Replace solenoid

NO

Disconnect processor connectors. Check for short to ground or an open circuit between C127–17 and C127–12 and the solenoid harness side connector, C162. Repair/replace wiring as necessary.

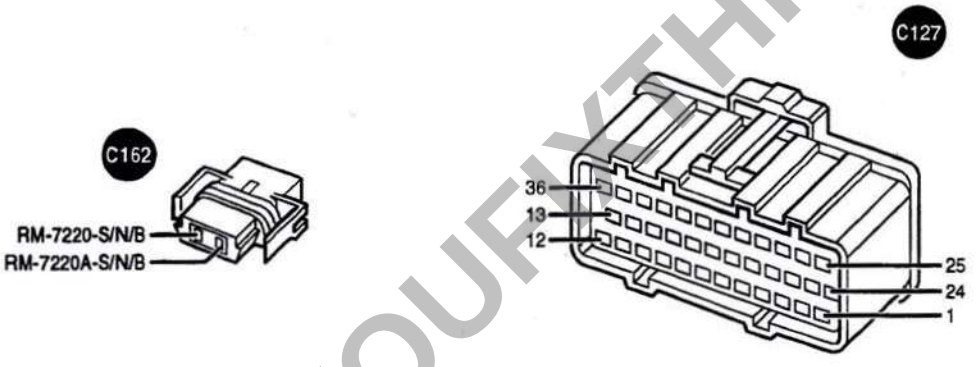

ERROR CODES;
E40 – CLUTCH 'A' (LOW) SOLENOID SHORT CIRCUIT
E41 – CLUTCH 'A' SOLENOID OPEN CIRCUIT
EFFECTS – Transmission disabled.

With the cab floor removed, disconnect connector C161 to Clutch A. With a suitable multimeter check the solenoid for open/short circuit. Is a solenoid fault indicated?

YES → Replace solenoid

NO

Disconnect processor connectors. Check for short to ground or an open circuit between C127–18 and C127–26 and the solenoid harness side connector, C161. Repair/replace wiring as necessary.

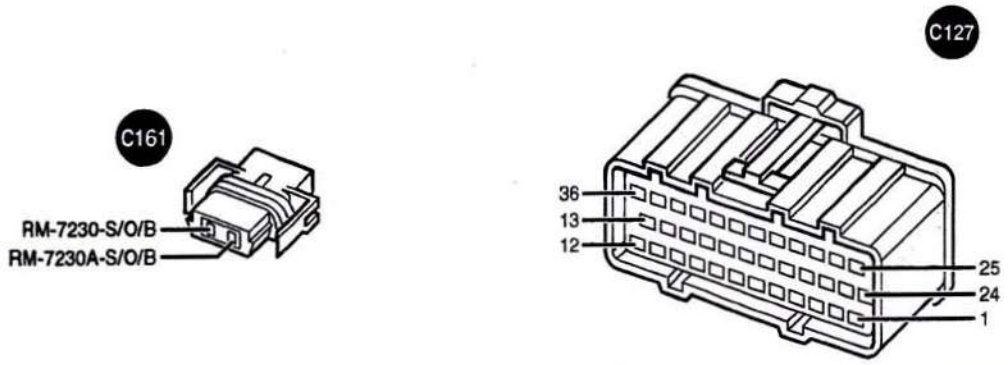

PREVIEW - YOUFIXTHIS.COM

Download full manual at youfixthis.com

32. Slide out the rails from rear side and retrieve forks and selector dog.

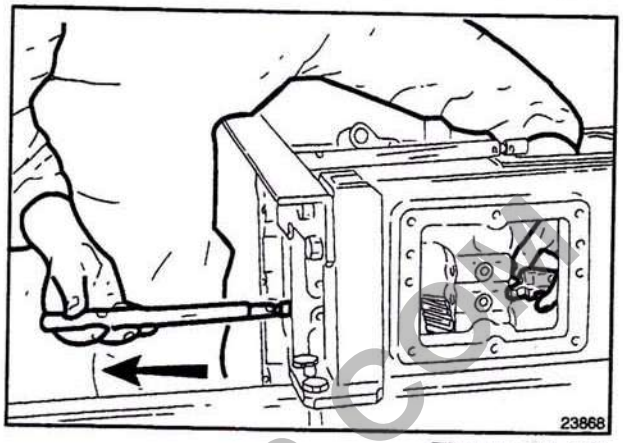

Figure 4-5-115

33. Remove the safety pawl (1).

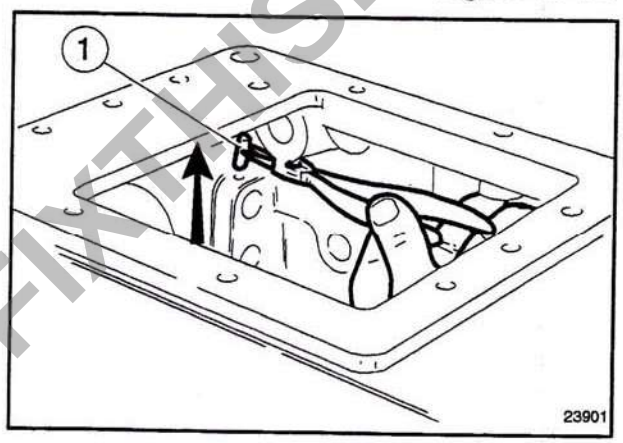

Figure 4-5-116

34. Loosen the fitting and retaining screw, remove the output shaft lubrication tube (1).

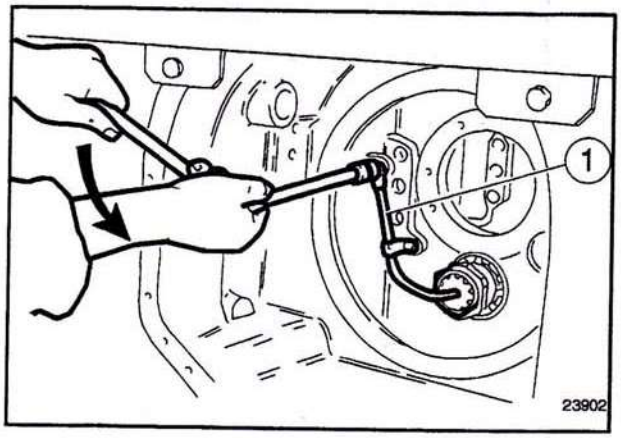

Figure 4-5-117

35. Install tool no. **293808** (1) on transmission output shaft and insert a wrench (2) to hold the shaft in place.

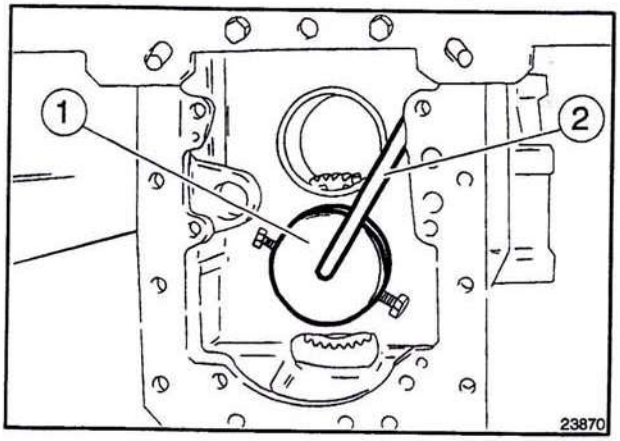

Figure 4-5-118

PREVIEW - YOUFIXTHIS.COM

Download full manual at youfixthis.com

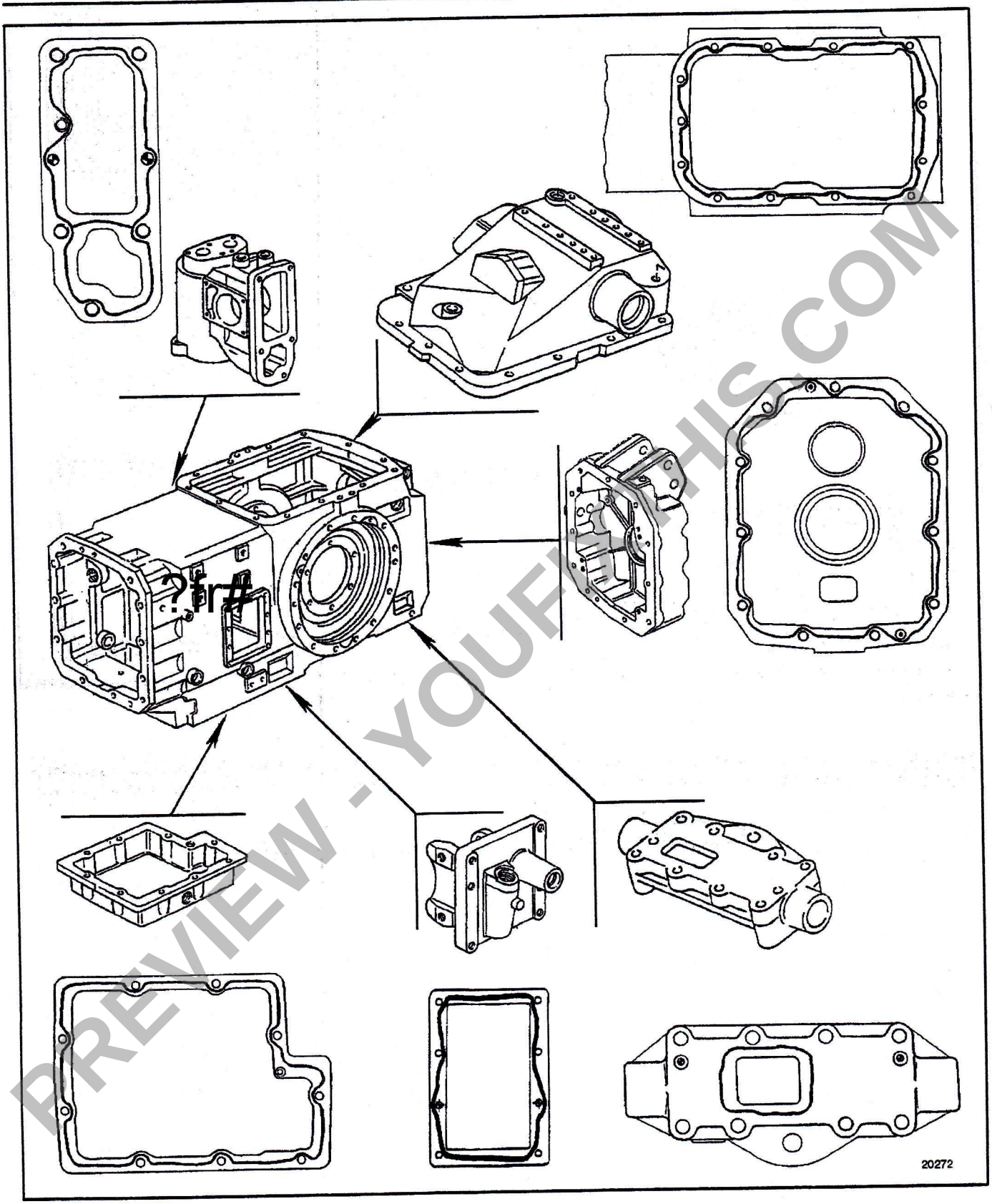

Figure 5-1-90

Patterns for application of liquid gasket during installation of: (a) hydraulic pump mounting plates; (b) hydraulic lift; (c) PTO housing; (d) flex bar support; (e) parking brake bracket; (f) rear axle housing bottom cover.

Sealants to be used are listed on page 0-1-19, Section 00.

PREVIEW - YOUFIXTHIS.COM

Download full manual at youfixthis.com

9. Loosen the clamp and detach the injection pump supply line (5), detach connectors (4), loosen and remove the fuel level sensing unit.

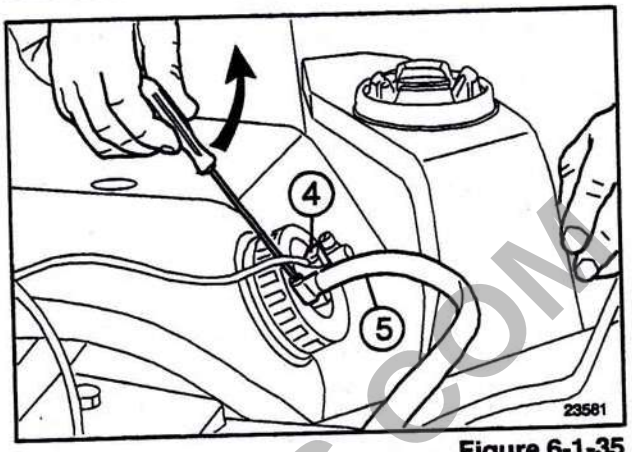

Figure 6-1-35

10. Loosen the nut of the main tank metal lock–plate (6), remove plate and remove the tank. Tilt tank to ease it out from between the cab and mounting bracket.

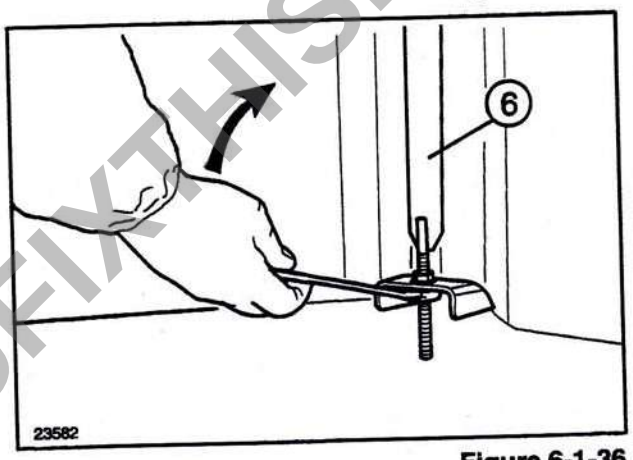

Figure 6-1-36

11. Detach the cable from the parking brake control lever.
12. Loosen the retaining screws and remove the parking brake control assembly.

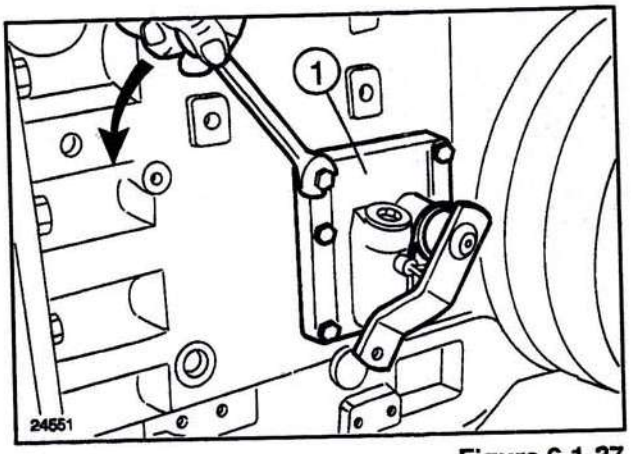

Figure 6-1-37

13. Straighten the locking tabs (1).

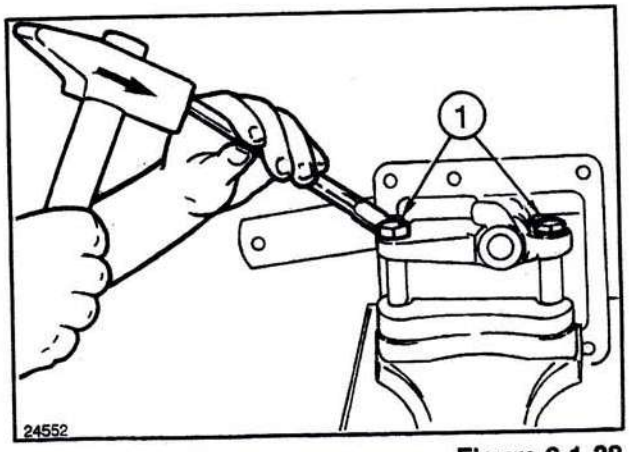

Figure 6-1-38

PREVIEW - YOUFIXTHIS.COM

Download full manual at youfixthis.com

To identify the tractor build options observe the following components

Closed center high pressure hydraulic systems use:–

Closed center load sensing variable displacement piston pump

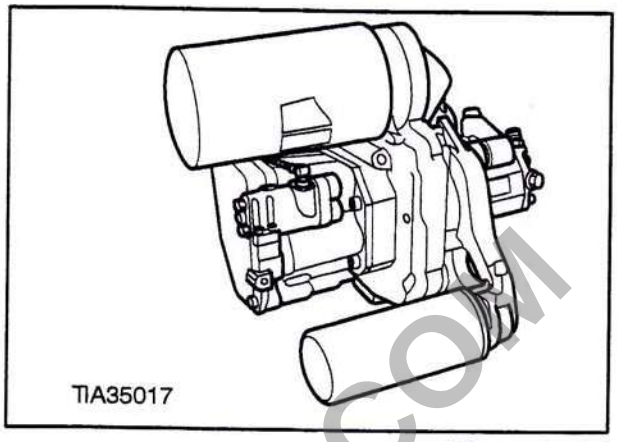

Figure 8-1-1

Closed center remote valves.

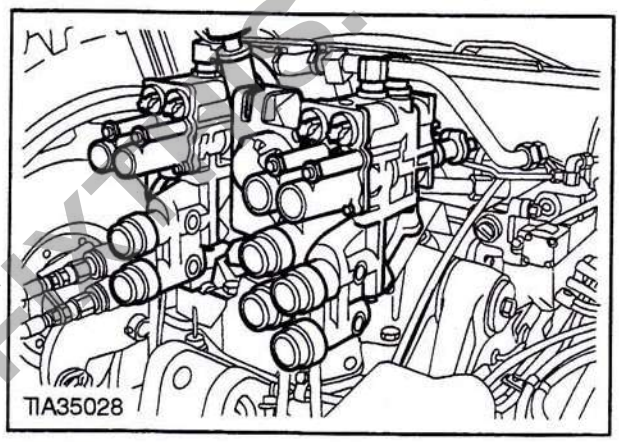

Figure 8-1-2

Open center high pressure hydraulic systems use:–

Open center gear pump. (Not used in North America)

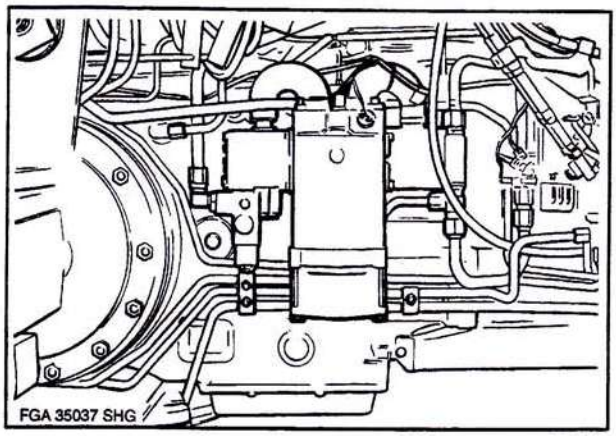

Figure 8-1-3

Open center remote control valves (Not used in North America)

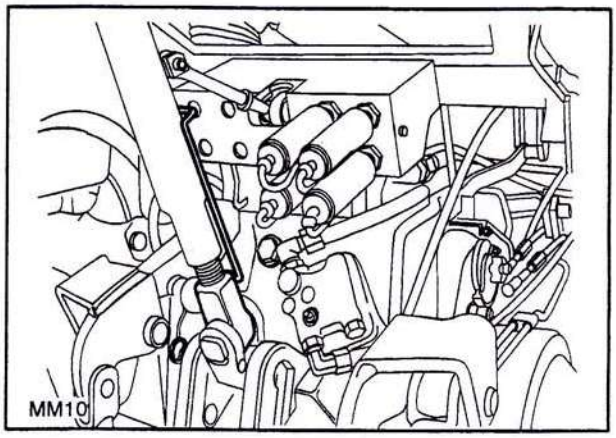

Figure 8-1-4

YouFixThis.com
Download full manual at youfixthis.com
PREVIEW - YOUFIXTHIS.COM

Load Sensing Circuit Test

1. Install either a *0–6000* lbf/in^2 *(0–420 bar)* pressure gauge or multi range pressure gauge in the extend port of remote valve No1.

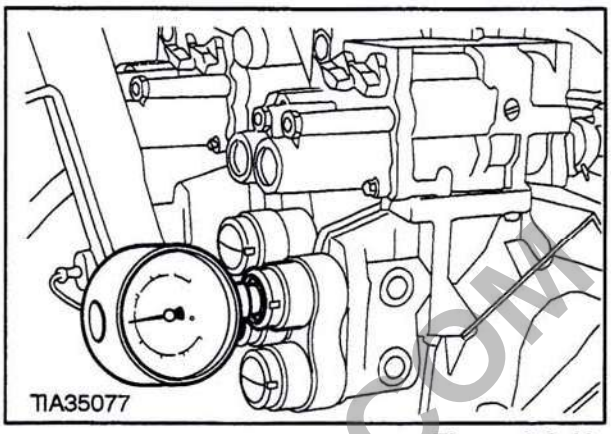

Figure 8-2-19

2. Set engine speed to 1500 rev/min.

3. Pull and hold remote valve control lever No 1 in the 'extend' position.

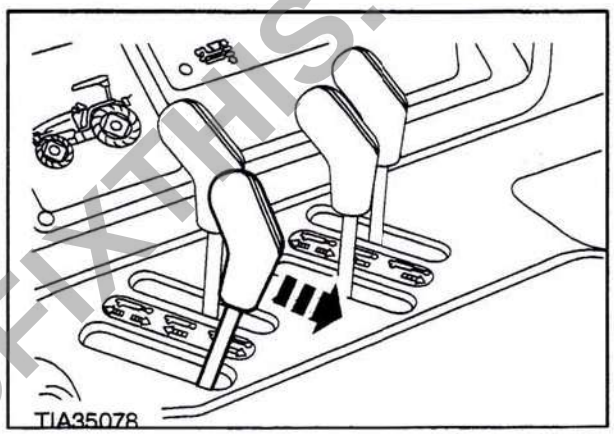

Figure 8-2-20

4. While holding remote valve lever No 1 in extend position operate in turn remote valves No 3 and 4, and tractor brakes. As each remote valve is operated the pressure reading should increase from low pressure standby to 2750 lbf/in^2 (190 bar). This is called 'High Pressure Standby'.

When operating the trailer brake the pressure will rise to a maximum of 2175 lbf/in^2 (150 bar).

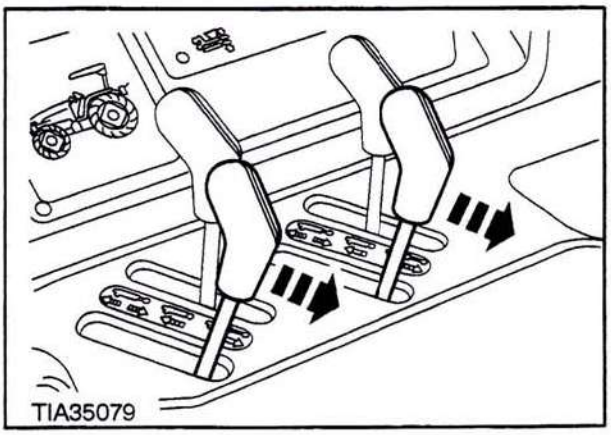

Figure 8-2-21

To test the load sensing circuit for remote valves 1 and 2, use remote valve No 3 to install pressure gauge and disconnect load sensing line.

If pressure readings when operating remote control valves are marginally away from Specification adjust pressure compensating valve.

If the gauge pressure does not rise when only operating a specific function examine the shuttle valves in the circuit which is not functioning correctly.

YouFixThis.com

Download full manual at youfixthis.com

PREVIEW - YOUFIXTHIS.COM

FAULT FINDING AND REPAIR

Tractors installed with electronic draft control are equipped with two separate systems to assist in the detection and correction of faults in the system.

These are:–

- Self Diagnostic Error Code Display
- Service Diagnostic Test Routines

Fault diagnostic error codes as mentioned previously in this Chapter are displayed on the instrument panel as a two digit flashing error code.

On tractors installed with the electronic instrument cluster the error codes are displayed in the instrument panel as shown Figure 8-4-17.

On tractors installed with the analog electronic instrument cluster the electronic management unit, transmission and electronic draft control hydraulic lift fault codes are all displayed in the same instrument cluster window.

To differentiate between each type of code the following logic applies.

Error codes relating to the Electronic management unit are preceded by the letter **P**, Figure 8-4-18.

Error codes relating to the transmission are preceded by the letter **E**, Figure 8-4-19.

Error codes relating to the Electronic draft control hydraulic lift assembly **do not** have any preceding letter, Figure 8-4-20.

The pointer above the code moves to either the PTO, transmission or hydraulic lift symbol to also indicate the type of fault displayed,

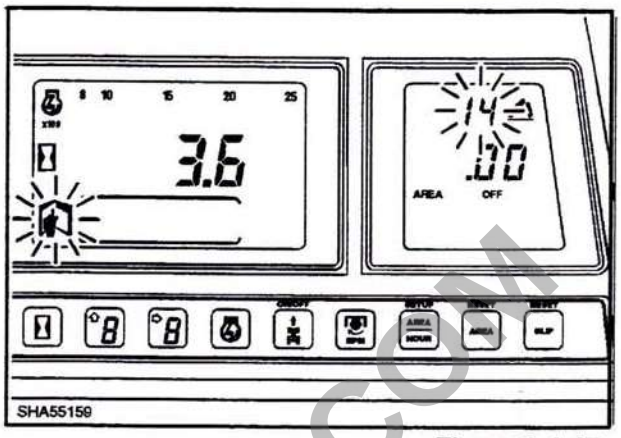

Figure 8-4-17

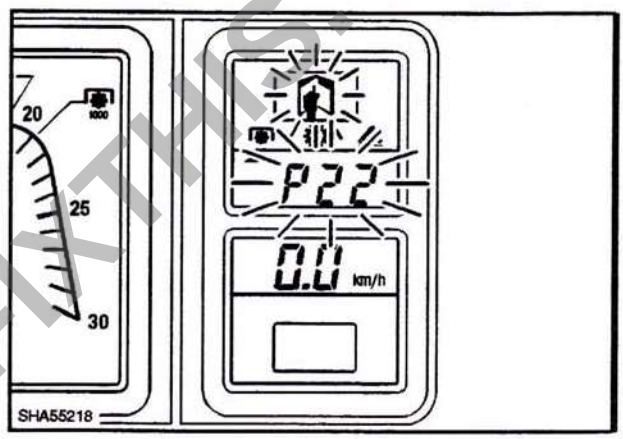

Figure 8-4-18

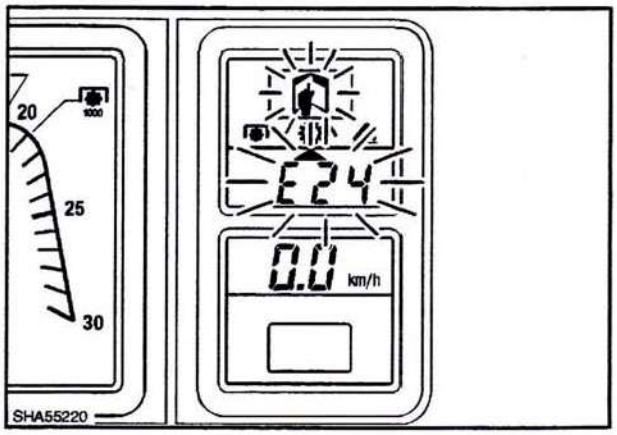

Figure 8-4-19

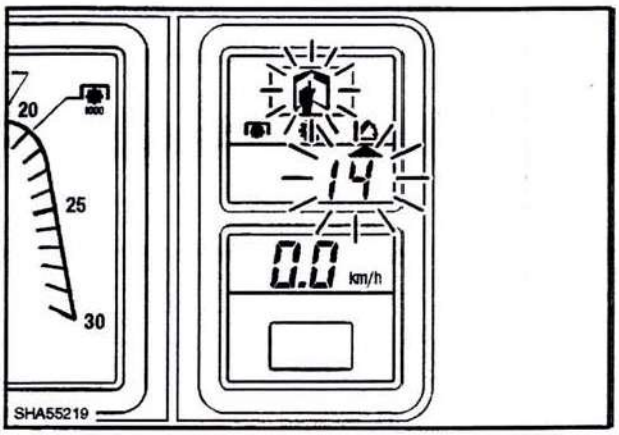

Figure 8-4-20

YouFixThis.com
Download full manual at youfixthis.com
PREVIEW - YOUFIXTHIS.COM

Disassembly

1. Remove four bolts securing lift cylinder to cover and remove cylinder.

2. Disassemble Lift cover with reference to Figure 8-4-89

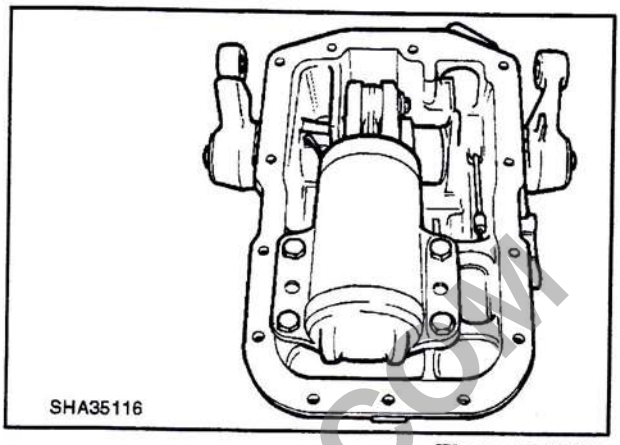

Figure 8-4-88

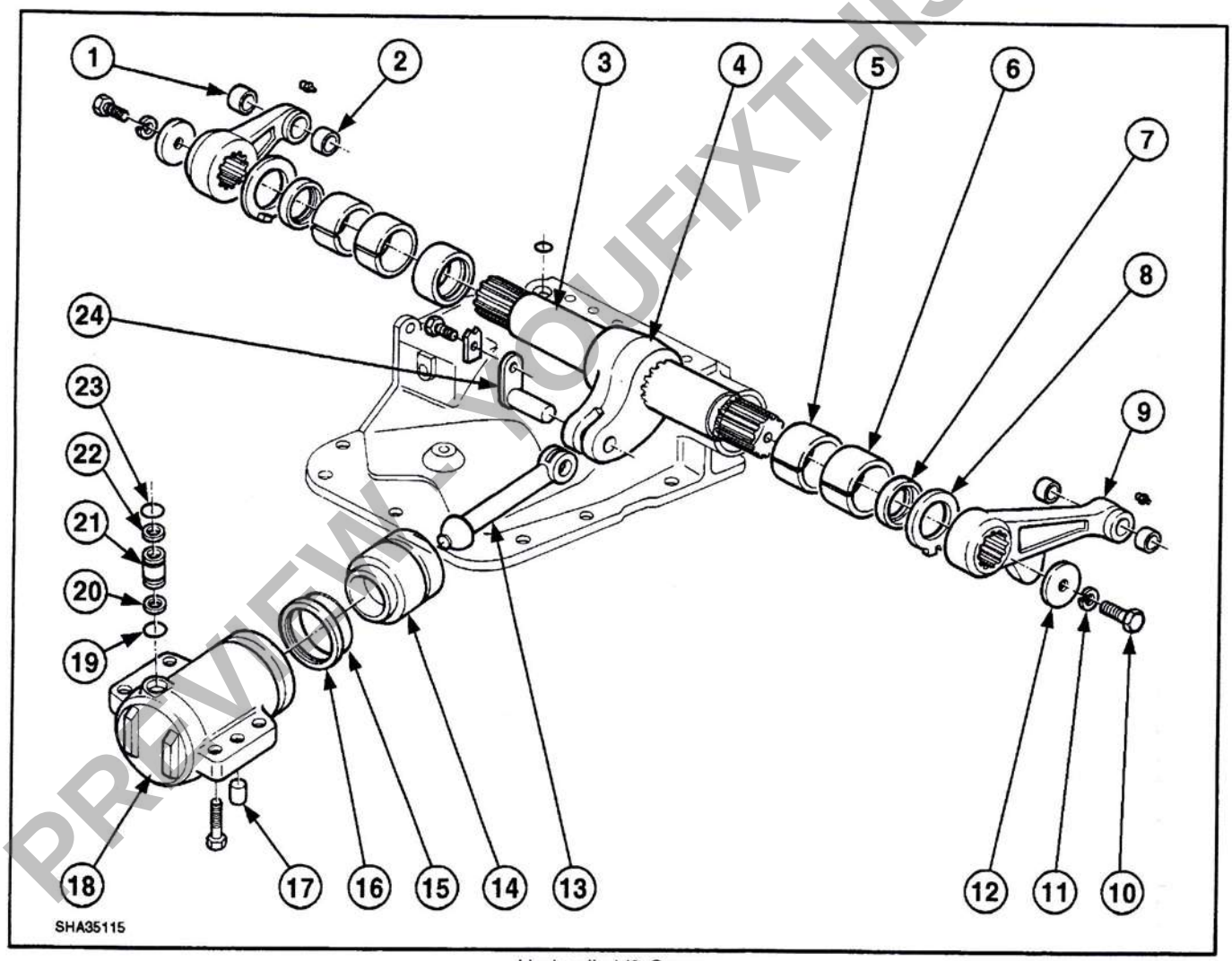

Hydraulic Lift Cover

Figure 8-4-89

1. Bushing
2. Bushing
3. Cross Shaft
4. Arm
5. Bushing
6. Bushing
7. Seal
8. Spacer
9. Arm
10. Bolt
11. Washer
12. Spacer
13. Rod
14. Piston
15. Back up Ring
16. Seal
17. Dowel (2 off)
18. Cylinder
19. 'O' Ring
20. Seal
21. Connecting Tube
22. Seal
23. 'O' Ring
24. Pin

YouFixThis.com
Download full manual at youfixthis.com
PREVIEW - YOUFIXTHIS.COM

An alternative joystick control (1) may be fitted in place of the levers operating remote control valves I and II. The joystick operates in a cross pattern. As with the conventional levers, the joystick provides four positions: Raise (R), Neutral (N), Lower (L) and Float (F).

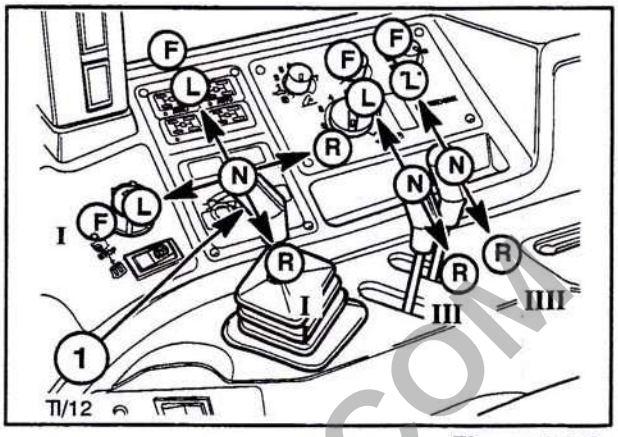

Figure 8-6-3

The joystick has the added advantage of being able to operate two remote control valves simultaneously by moving the lever between the valve No. I and No. II positions. This feature will be found useful when operating, loaders, fertilizer spreaders, etc.

Each remote valve has its own flow control valve (1) which permits individual adjustment of the range of flow when operating two or more valves simultaneously. Turning the flow control knob counterclockwise (hare symbol uppermost) increases the rate of flow and turning the knob clockwise (tortoise symbol uppermost) decreases the rate of flow. The couplers are of a self–sealing/locking design but will allow remote cylinder hoses to pull free if the implement should become disconnected from the tractor.

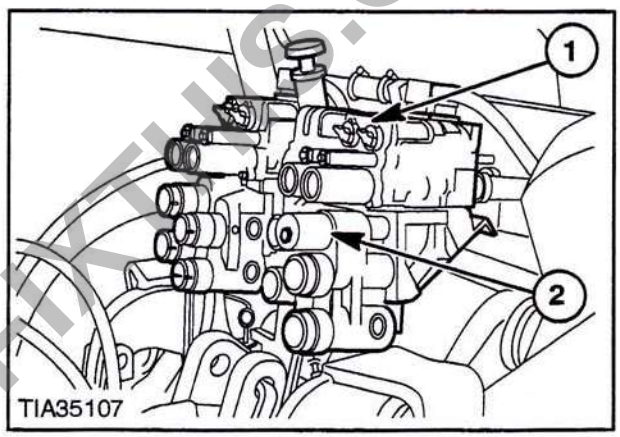

Figure 8-6-4

Remote valves I and III can also be equipped with the optional solenoid operated lock valves (2). These valves lock the oil in the raise coupler, whenever the remote valve lever is in Neutral and are designed specifically for use when using the remote valves to raise and hold equipment during transportation or work.

Lock valves are not available on remote valve number I if the joystick control described above is fitted.

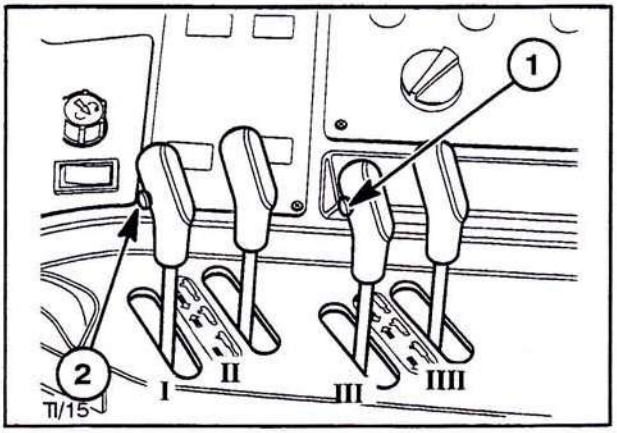

Figure 8-6-5

NOTE: *When operating remotes which incorporate the lock valve it is necessary to depress and hold the button on the side of the control lever when operating the valve in the lower/retract mode.*

It is ***not possible*** *to operate remotes installed with lock valves, in the* ***'Float'*** *position.*

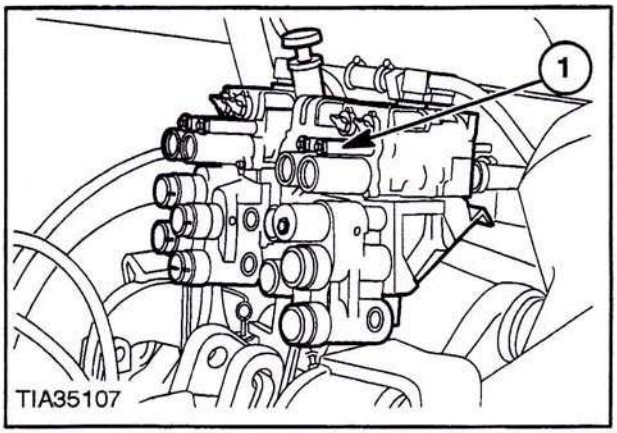

Figure 8-6-6

A detent (1) will hold the lever in the selected extend or retract position until the remote cylinder reaches the end of the stroke when the control lever will automatically return to neutral. Alternatively, the lever may be returned to neutral manually. The lever will not return automatically from the float position or when the detent screw has been fully screwed in. Adjustment of the detent screw varies the system pressure required to return the lever automatically to the neutral position.

PREVIEW - YOUFIXTHIS.COM
YouFixThis.com
Download full manual at youfixthis.com

Trailer Braking System Pressure Regulating Valve Adjustment Testing (Incorporated into the Trailer Brake Auxiliary Valve).

Proceed as follows:

1. Insert fitting no. **293190** (1) in trailer brake coupler and connect it to a 0 to 3560 lbf/in^2 (0 to 250 kg/cm^2) pressure gauge from kit no. **292870.**
2. With engine and oil in the conditions described at the beginning of this chapter and applying a force of 418 to 488 lbf/in^2 (29.4 to 34.3 kg/cm^2) (30 to 35 daN) on the brake pedals, pressure should be 1960 to 2100 lbf/in^2 (138 to 148 kg/cm^2) (135 to 145 bar).
3. Engage parking brake, disconnect pressure gauge and fitting no. **293190 (1).**

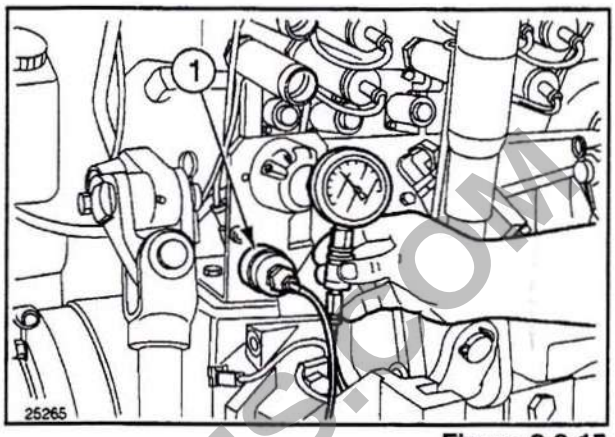

Figure 8-8-15

Troubleshooting.

Problem	Possible cause	Correction
Pressure higher or lower than specified.	1. Faulty trailer braking auxiliary valve pressure regulating valve (3, Figure 8-8-13).	Replace trailer braking auxiliary valve.
	2. Faulty hydraulic pump (9).	Replace pump.

Hydraulic System Leak Testing

Proceed as follows:

1. Insert fitting no. **293190 (1)** in trailer brake coupler and connect it to a 0 to 3560 lbf/in^2 (0 to 250 kg/cm^2) pressure gauge from kit no. **292870.**
2. With engine an oil in the conditions described at the beginning of this chapter and applying a force of 418 to 488 lbf/in^2 (29.4 to 34.3 kg/cm^2) (30 to 35 daN) on the brake pedals, pressure should be 1960 to 2100 lbf/in^2 (138 to 148 kg/cm^2) (135 to 145 bar).
3. Engage parking brake, disconnect pressure gauge and fitting no. 293190 (1).

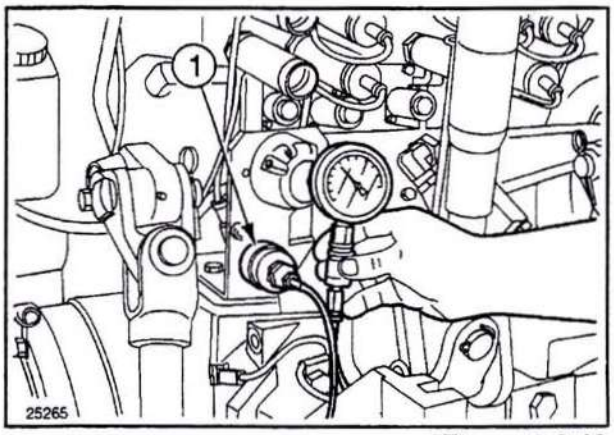

Figure 8-8-16

Troubleshooting.

Problem	Possible cause	Correction
Excess pressure peaks are observed when applying the specified force on the brake pedals for 10 seconds.	1. Oil leaks from hydraulic system.	Locate leaks and repair.
	2. Anomalous solenoid valve leak (5b, Figure 8-8-13).	Replace solenoid valve.
	3. Anomalous trailer brake auxiliary valve (7) leaks.	Replace trailer brake auxiliary valve.

YouFixThis.com
Download full manual at youfixthis.com
PREVIEW - YOUFIXTHIS.COM

10. Detach the differential lock control line (1).

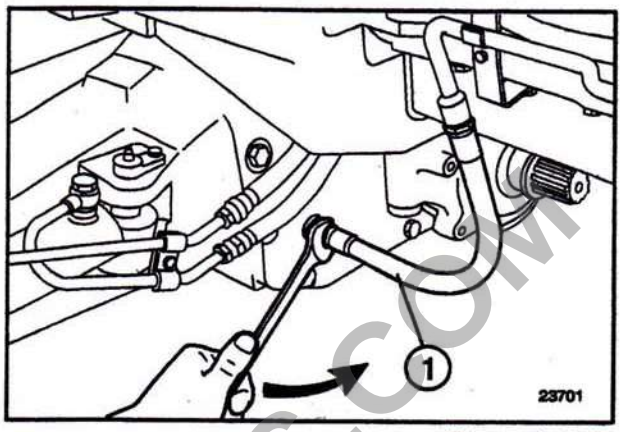

Figure 9-3-13

11. Loosen the front (3) and rear support pillar attaching bolts and remove the front axle using a hoist and two nylon cables (2) (one on each side).

⚠ WARNING ⚠

Always use suitable tools to align holes. DO NOT USE HANDS OR FINGERS.

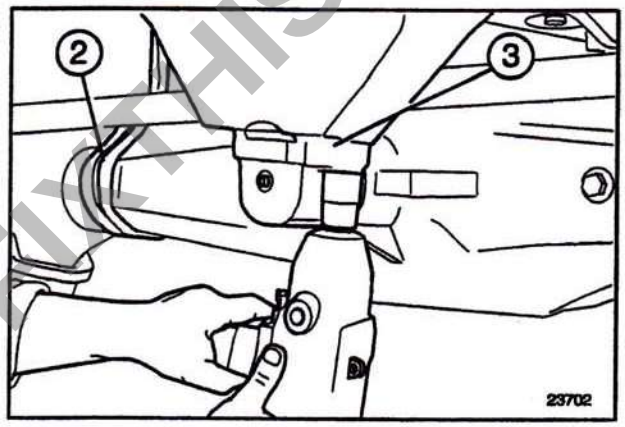

Figure 9-3-14

12. Reinstall the front axle assembly observing the following:

- Reassembly follows the disassembly procedure in reverse, from step 11 back to step 1.
- Tighten to correct torque as detailed on page 9-3-4.

PREVIEW - YOUFIXTHIS.COM

Download full manual at youfixthis.com

6. Anchor end of tool in adhesive and pull handle, see Figure 10-1-3 (A), guiding wire close to glass edge. Pull end of tool (1) from the adhesive bead (2) and reposition further along the bead, Figure 10-1-3 (B). Use long cutting strokes on straight edges to reduce risk of wire breakage and short cutting strokes at corners to avoid breaking glass (two man operation).

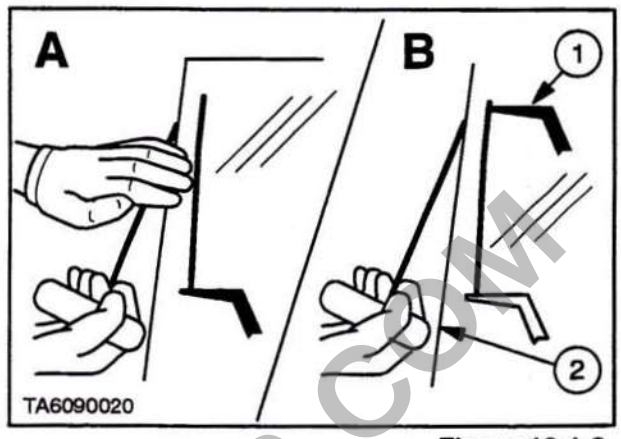

Figure 10-1-3

7. Using suction cups, lift out glass. Place outer surface of glass face down on a protected surface.

8. Taking care not to damage the frame, cut away adhesive (1) to leave a smooth bevel of approximately 0.079 in (2.0 mm), see Figure 10-1-4.

NOTE: *It is not necessary to remove all residual material from the frame.*

9. Repeat Number 8, above, for glass clean up procedure.

REMOVAL – GLASS BROKEN

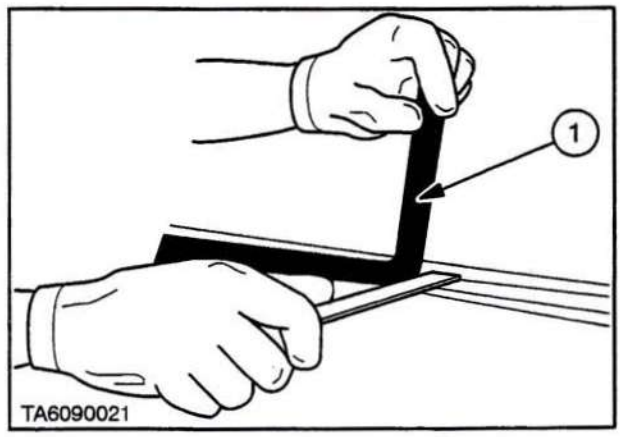

Figure 10-1-4

1. Remove exterior trim moldings – as required.

2. Remove interior trim moldings – as required.

3. Where possible remove glass support blocks as they can restrict the action of the cutting knife.

4. Taking care not to damage frame cut away adhesive to leave a smooth bevel of approximately 0.079 in (2.0 mm), see Figure 10-1-4.

NOTE: *It is not necessary to remove all residual material from the frame.*

PREVIEW - YOUFIXTHIS.COM

Download full manual at youfixthis.com

PREVIEW ONLY

You're viewing 25 of 1398 pages

The full manual includes:

- All 1398 pages, complete
- Searchable PDF (find any keyword)
- No watermarks
- Instant download
- Print-ready quality

GET FULL MANUAL NOW

Ford 8160, 8260, 8360, 8560 repair



Scan or click anywhere
youfixthis.com

Click anywhere on this page to get the full manual