DealerNation
Download full manual at youfixthis.com
DealerNation@aol.com

8530 6 CYL AG TRACTOR (3/90-12/93)

01A02 FRONT WHEEL ASSEMBLY - TW5 THRU TW35; 8530 THRU 8830

Ref	Part Number	Qty	Description
1	D8NN1007JA	2	Wheel Assy., 11C x 16, Start Year: 01/01/1983
1	E5NN1007FA12G	2	Wheel Assy., 10L x 16, Start Year: 01/01/1983
1	E5NN1007HA12G	2	Wheel Assy., 16.1 x 16L, Start Year: 01/01/1983
1	E5NN1007JA12G	2	Wheel Assy., W8L x 16, 8 Holes, Start Year: 01/01/1983
2	174124	2	Retainer Assy., Start Year: 01/01/1983
2	83948358	2	Retainer Assy., Use w/E1NN-1104-AA (83931617), Years: 01/01/1983-12/31/1985
3	D8NN1214AA	2	Shield, Start Year: 01/01/1983
3	81812306	2	Shield, Front Wheel, Hub Mud, I.D. 2.25 O.D. 3.7, Use w/E1NN-1104-AA (83931617), Years: 01/01/1983-12/31/1985
4	174127	2	Cone & Roller Assy., Start Year: 01/01/1983
4	512725	2	Cone & Roller Assy., Use w/E1NN-1104-AA (83931617), Start Year: 01/01/1983
5	D8NN1104BA	2	Hub Assy., Heavy Duty, Includes: Ref. 6 & 7, Start Year: 01/01/1983
5	E1NN1104AA	2	Hub Assy., Includes: Ref. 6 & 7, Years: 01/01/1983-12/31/1985
6	174125	2	Cup, Inner, W/Large Wheel Base, Start Year: 01/01/1983
6	81812302	1	Cup, Bearing, Inner, Years: 01/01/1983-12/31/1985
7	86977427	2	Cup, Outer, Start Year: 01/01/1983
7	273610	1	Cup, Outer, Years: 01/01/1983-12/31/1985
8	41480	2	Cone Assy., Outer, Start Year: 01/01/1983
8	81812303	2	Cone Assy., Outer, Use w/E1NN-1104-AA (83931617), Start Year: 01/01/1983
9	80717	2	Fitting, 1/8"-27 x 1-1/32" x 45°, Start Year: 01/01/1983
10	D8NN1107AA	16	Bolt, 9/16"-18 x 1.12, Start Year: 01/01/1983
10	83957574	16	Bolt, 5/8-18 x 2-1/2, Start Year: 01/01/1983
11	388502S2	2	Washer, Start Year: 01/01/1983
11	81735236	2	Washer, Grease Retainer, Use w/E1NN-1104-AA (83931617), Years: 01/01/1983-12/31/1985
12	280172	2	Nut, Slotted, G2, 7/8"-14, Start Year: 01/01/1983
13	72072S8	2	Pin, 5/32" x 1-1/2", Start Year: 01/01/1983
14	137395	2	Cap, Hub, 3.15" Dia., Start Year: 01/01/1983
14	249127	2	Cap, Use w/E1NN-1104-AA (83931617), Years: 01/01/1983-12/31/1985

PREVIEW - YOUFIXTHIS.COM

Download full manual at youfixthis.com

01A02 FRONT WHEEL ASSEMBLY - TW5 THRU TW35; 8530 THRU 8830

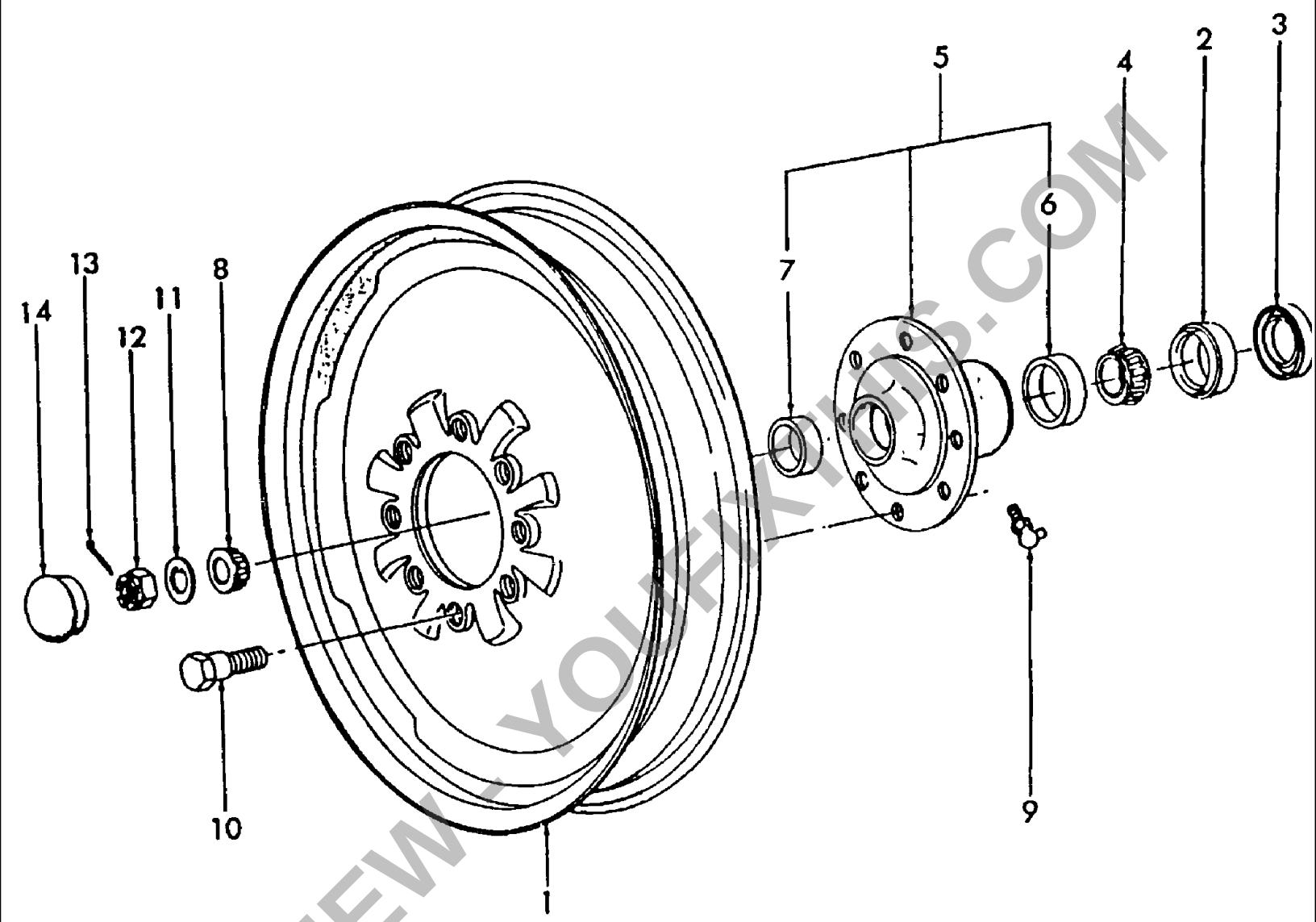

PREVIEW - YOUFIXTHIS.COM

Download full manual at youfixthis.com

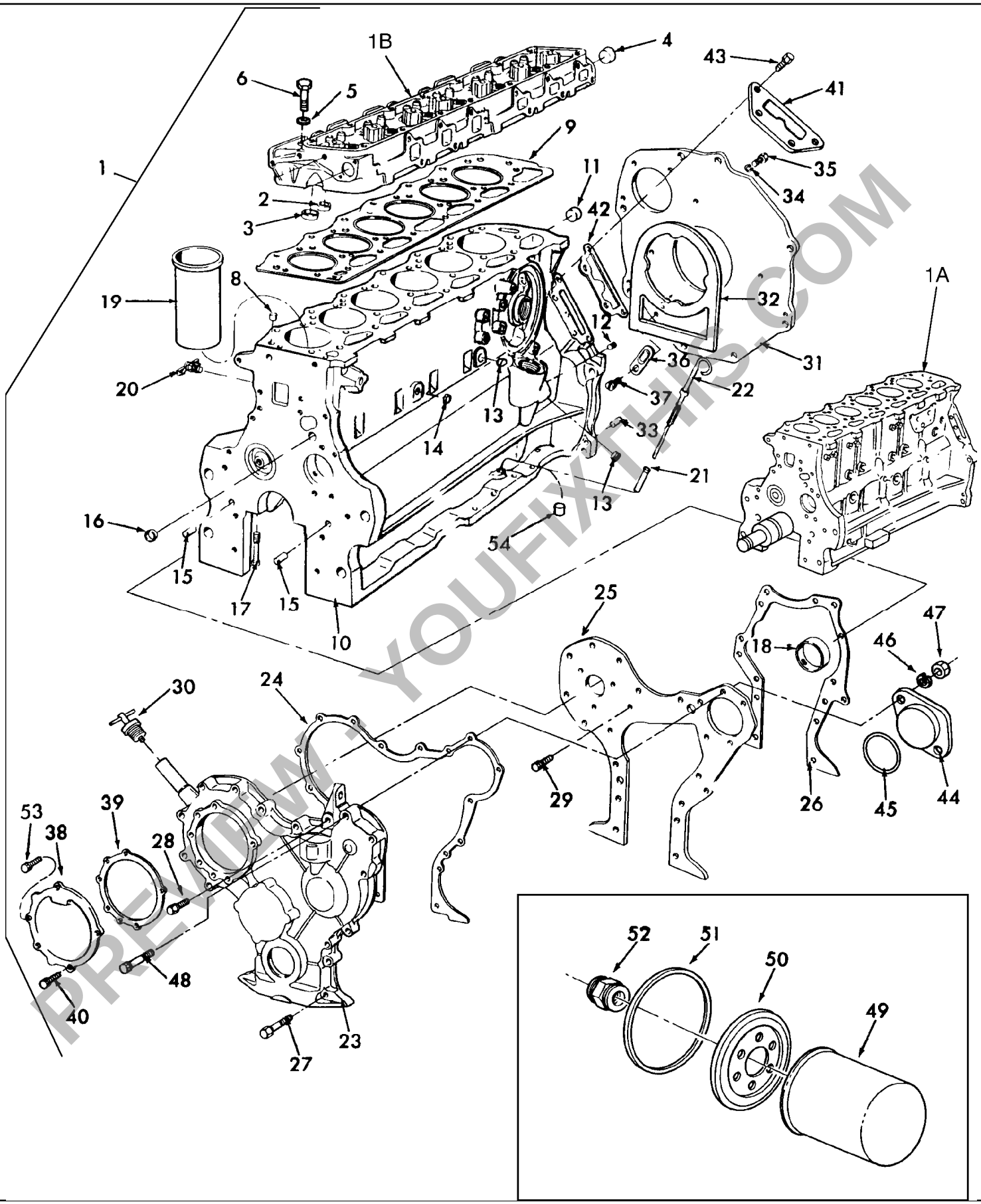

When replacing prior Level 6009 Cylinder Block & Crankshaft W/E6NN-6009 Level Cyl. Block & Crankshaft also order (1) FP-115 Bolt Kit.When replacing E1NN-6010-CB W/E6NN-6010-EA also order (1) FP-115, (1) E5HN-6N306-AB, (1) E5HN-6N305-AB, (1) E5NN-6701-BA, (1) E6NN-6269-AA, (8) 304682-S36, (2) 34792-S36

PREVIEW - YOUFIXTHIS.COM

Download full manual at youfixthis.com

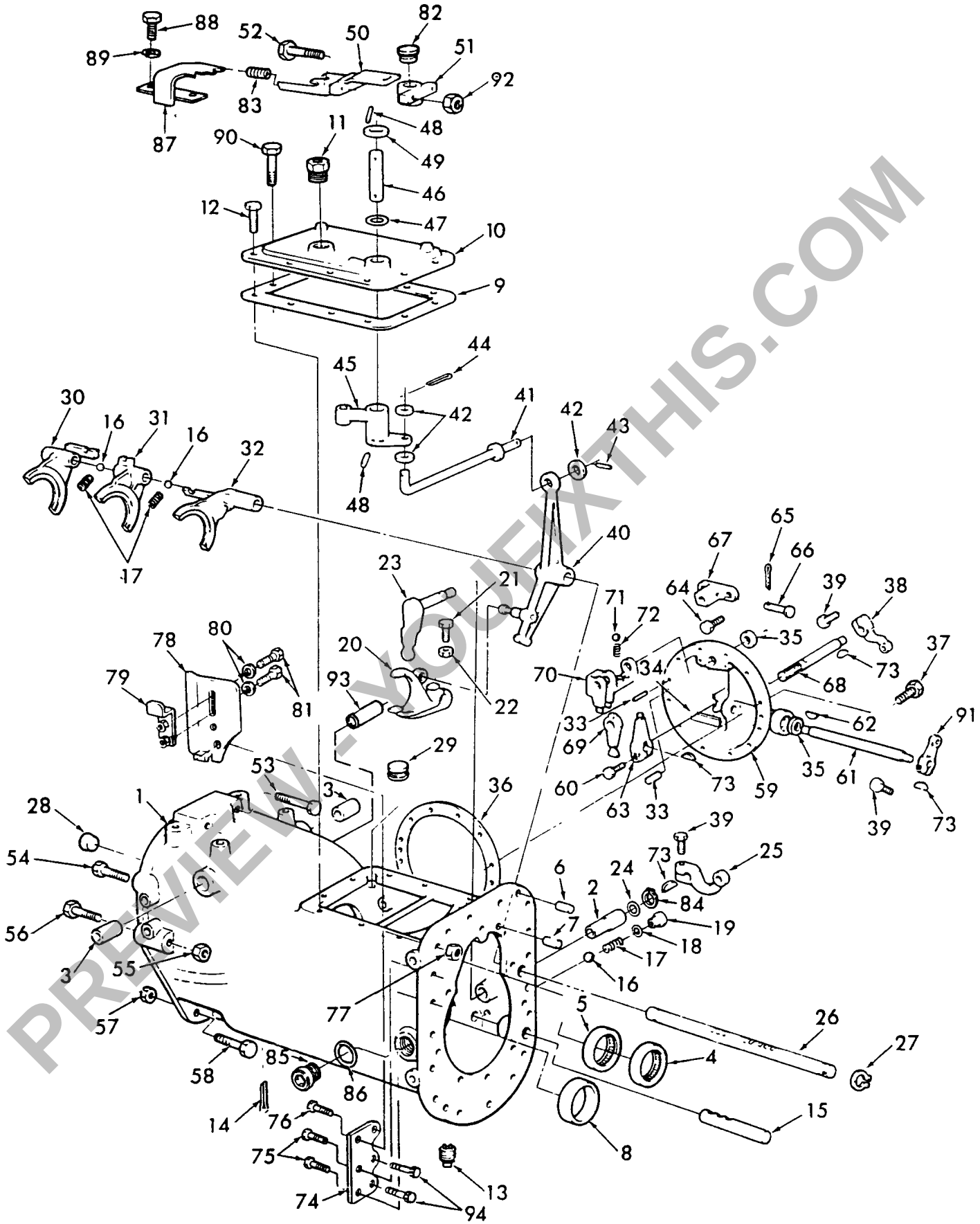

PREVIEW - YOUFIXTHIS.COM

Download full manual at youfixthis.com

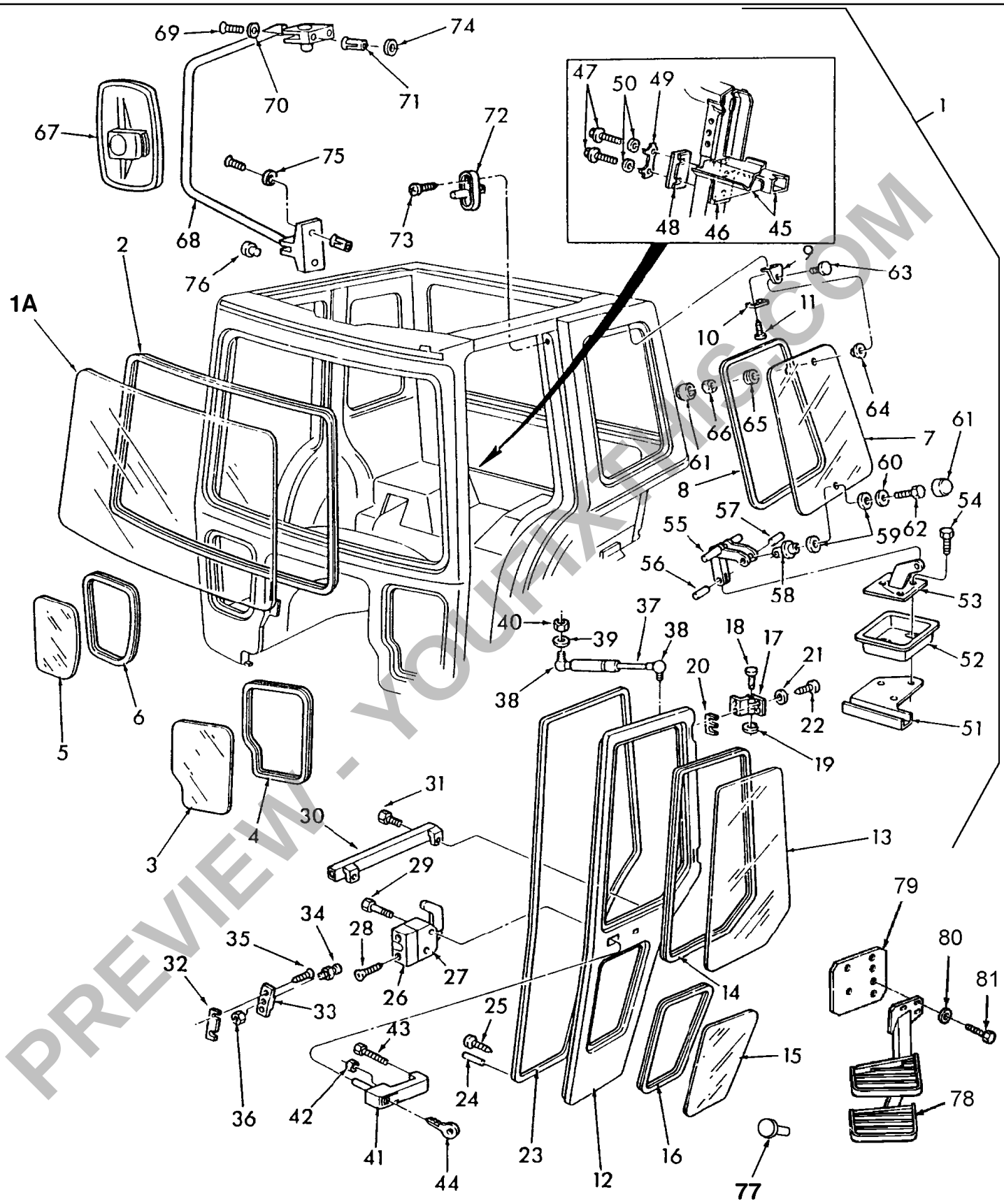

PREVIEW - YOUFIXTHIS.COM

Download full manual at youfixthis.com

Figure Search for 8530 6 CYL AG TRACTOR (3/90-12/93)

05Q01 REMOTE CONTROL UNLOAD VALVE ASSEMBLY (3-85/)
05R01 HYDRAULIC LIFT ASSIST RAM
05S01 LIFT & DRAFT CONTROL - 8530, 8630, 8730, 8830
05T01 COVER & VALVE ASSEMBLY - 8530, 8630, 8730, 8830
05T02 TUBES & FILTERS, PUMP & PUMP COVER - 8530, 8630, 8730, 8830
05U01 HANDLES - REMOTE CONTROL VALVES - 8530, 8630, 8730, 8830
05V01 HYDRAULIC LIFT COVER & RELATED PARTS - 8530, 8630, 8730, 8830
05V02 CYLINDER, HYDRAULIC LIFT - 8530, 8630, 8730, 8830
05V03 HYDRAULIC LIFT LOCK
05W01 COUPLING ASSEMBLY, REMOTE CONTROL
06A01 ENGINE, CYLINDER BLOCK, HEAD & RELATED PARTS
06A02 ENGINE BLOCK
06A03 KIT - STEPPED STUD ENGINE BLOCK (12-86/)
06B01 CRANKSHAFT, FLYWHEEL & RELATED PARTS
06C01 CAMSHAFT, ROCKER ARM, VALVES & RELATED PARTS
06D01 PISTONS & CONNECTING RODS
06E01 OIL PUMP, OIL PAN & RELATED PARTS
06F02 MANIFOLD & EXHAUST SYSTEM - TW5, 8530
06Z01 GASKET OVERHAUL KIT, TW5, 15, 25, 35, 7910 & 8210
07A04 TRANSMISSION CASE - TW5, 15, 25, 35, 8530 THRU 8830
07A05 8-SPEED TRANSMISSION GEARS & RELATED PARTS - TW5, 15, 25, 35, 8530 THRU 8830
07B01 TRANSMISSION CONTROL - TW5, TW15, TW25, TW35, 8530 THRU 8830
07C01[B] OIL PUMP CONTROL VALVE & TUBES - 8530,8630,8730,8830 (3-90/); 8 X 2, 16 X 4 TRANS.
07D01 TRANSMISSION DUAL POWER
07E02 PTO CLUTCH, VALVE, SHAFT & RELATED PARTS - TW5, TW15, TW25, TW35, 8530, 8630, 8730, 8830
07F01 PTO CLUTCH CONTROLS - TW5, TW15, TW25, TW35
07F01[A] INDEPENDENT PTO CLUTCH LINKAGE - TW5, 15, 25, 35, 8530 THRU 8830
07G03 PTO GUARD KIT - TW5, TW15, TW25, TW35 (11-85/2-90) 8530 THRU 8830 (3-90/)
07H03 CLUTCH CONTROLS, TW5 (83/2-90) & 8530 (3-90/)
07J02 TRANSMISSION OIL COOLING SYSTEM - TW5, TW15, TW25, TW35
07K02 CREEPER GEARS - TW5, TW15, TW25, TW35 (83/2-90), 8530, 8630, 8730, 8830 (3-90/)
07L01 TORQUE LIMITER & RELATED PARTS - 18 X 9 POWERSHIFT
07L02 TRANSMISSION HOUSINGS & RELATED PARTS, 18 X 9 POWERSHIFT
07L03 CLUTCH ASSEMBLY & CHARGE PUMP - 18 X 9 POWERSHIFT
07L04 SPEED CLUTCH ASSEMBLIES - 18 X 9 POWERSHIFT
07L05 RANGE CLUTCH ASSEMBLIES - FORWARD 1 & REVERSE - 18 X 9 POWERSHIFT
07L06 RANGE CLUTCH ASSEMBLY, FORWARD 2
07L07 CONTROL VALVE ASSEMBLY, 18 X 9 POWERSHIFT
07L08 TRANSMISSION SHIFT CONTROL
07L09 TRANSMISSION GEARSHIFT LEVER
07L10 TRANSMISSION DRIVELINE CONTROL TUBES - 8530, 8630, 8730, 8830
07L11 CLUTCH CONTROLS
07L12 TRANSMISSION OIL COOLING SYSTEM, W/POWERSHIFT - 8530, 8630, 8730, 8830
07L13 TRANSMISSION ASSEMBLY, 18 X 9, 30 & 40 KPH CREEPER (4-92/)
08A02 RADIATOR, OIL COOLER & RELATED PARTS - TW5, TW15, 8530, 8630
08B01 WATER PUMP, PULLEY & RELATED PARTS
08C02 BRACKET ASSEMBLY & THERMOSTAT HOUSING - TW5, TW15, TW25, TW35, 8530, 8630, 8730, 8830
08C03 WATER FILTER
08C04 RADIATOR OVERFLOW CONTAINER
09A02 FUEL TANK ASSEMBLY & RELATED PARTS - TW5, TW15, 8530, 8630
09B01 FUEL SEDIMENTER & FILTER ASSEMBLY

PREVIEW - YOUFIXTHIS.COM
Download full manual at youfixthis.com

8530 6 CYL AG TRACTOR (3/90-12/93)

03B02 ADJUSTABLE FRONT AXLE & RELATED PARTS - TW5, TW15, TW25, TW35, 8530 THRU 8830

Ref	Part Number	Qty	Description
1	E2NN3N104CB12B	1	Axle Assy., Front Center, L/Heavy Duty, Start Year: 01/01/1983
1	E2NN3N104AB12B	1	Axle Assy., Center, W/Heavy Duty, L/Wide Adjustable, Start Year: 01/01/1983
1	E2NN3N104BB12B	1	Axle Assy., Center, W/Heavy Duty, TW5,TW15,TW25, Start Year: 01/01/1983
2	E2NN3006EB	1	Axle Assy., Extended, RH, Cast, Includes: Ref. 4 & 5, Start Year: 01/01/1983
2	E2NN3006DB12B	1	Axle Assy., RH, W/Heavy Duty, Cast, Includes: Ref. 4 & 5, Start Year: 01/01/1983
3	E2NN3007EB	1	Axle Assy., Extended, LH, L/Heavy Duty, Cast, 13.15" Spindle, TW35, Includes: Ref. 4 & 5, Start Year: 01/01/1983
3	E2NN3007DB12B	1	Axle Assy., LH, W/Heavy Duty, Cast, L/Wide Assy., 10.61" Spindle, Includes: Ref. 4 & 5, Start Year: 01/01/1983
4	D5NN3109B	2	Bushing, Upper, Except TW35, Start Year: 01/01/1983
4	D8NN3110AB	2	Bushing, Upper, Heavy Duty, 2.01" ID x 2.37" OD, Start Year: 01/01/1983
5	C0NN3110A	2	Bushing, Lower, Except TW35, Start Year: 01/01/1983
5	D8NN3110AB	2	Bushing, Lower, Heavy Duty, 2.01" ID x 2.37" OD, Start Year: 01/01/1983
6	80710	2	Fitting, Nipple, Lube, 1/8"-27, Start Year: 01/01/1983
7	301000S36	4	Screw, Cap, HH, G5, 1"-8 x 5-1/2", Start Year: 01/01/1983
8	87342	4	Washer, Lock, 1", Start Year: 01/01/1983
9	9849633	4	Nut, G5, 1"-8, Start Year: 01/01/1983
10	E0NN3N030BA	4	Spacer, Front Axle, TW5,TW15,TW25,TW35, Start Year: 01/01/1983
11	D5NN3105C	1	Spindle Assy., RH, TW5, TW15, TW25, TW35, Start Year: 01/01/1983
11	D9NN3105AA	1	Spindle Assy., RH, W/Heavy Duty, 8530,8630,8730,8830, Start Year: 01/01/1983
12	D5NN3106C	1	Spindle Assy., LH, TW5, TW15, TW25, TW35, Start Year: 01/01/1983
12	D9NN3105AA	1	Spindle Assy., LH, W/Heavy Duty, 8530,8630,8730,8830, Start Year: 01/01/1983
13	138712	2	Bearing Assy., 2.014 ID x 2.9375 OD, W/Heavy Duty, Start Year: 01/01/1983
13	D8NN3A299AA	2	Bearing Assy., 3.0888 ID x 4.0313 OD, Start Year: 01/01/1983
14	C0NN3A367A	2	Spacer, 2.20 I.D., 2.93 O.D., Start Year: 01/01/1983
14	D8NN3A367AB	2	Spacer, 2.09 ID x 2.82 OD, W/Heavy Duty, Start Year: 01/01/1983
15	D9NN3A208AA	2	Seal, Start Year: 01/01/1983
15	D8NN3A208BB	2	Seal, W/Heavy Duty, Start Year: 01/01/1983
16	D8NN3130HA	1	Arm, RH, W/Long Wheel Base, Start Year: 01/01/1983
16	86533883	1	Arm, RH, W/Short Wheel Base, Start Year: 01/01/1983
16	D8NN3130GC	1	Arm, RH, W/Heavy Duty, Start Year: 01/01/1983
17	D5NN3131C	1	Arm, LH, W/Short Wheel Base, Start Year: 01/01/1983
17	D8NN3131GA	1	Arm, LH, W/Long Wheel Base, Start Year: 01/01/1983
17	D8NN3131JA	1	Arm, LH, W/Heavy Duty, Start Year: 01/01/1983
18	34698S36	2	Nut, Hex, 1-1/8"-12, Start Year: 01/01/1983
18	34681S	2	Nut, Hex, W/Heavy Duty, 1-1/8"-12, Start Year: 01/01/1983
19	E0NN3029AA	1	Support Assy., Includes: Ref. 20, Start Year: 01/01/1983
20	C5NN3153A	1	Bushing, Start Year: 01/01/1983
21	9706701	4	Screw, Cap, HH, G5, 3/4"-10 x 2-1/2", Start Year: 01/01/1983
22	44758S36	2	Washer, 1-1/8", Start Year: 01/01/1983
22	C7NN3N450A	2	Washer, 3/4", Start Year: 01/01/1983

PREVIEW - YOUFIXTHIS.COM

Download full manual at youfixthis.com

03U04 PLANETARY DRIVE - 3 PIN, DANA AXLE - 8530, 8630, 8730, 8830

Ref	Part Number	Qty	Description
1	DANA070GT103	2	Gear, Planetary Ring, Start Year: 04/01/1992
2	DANA070HS1441	AR	Shim, .003, Start Year: 04/01/1992
2	86505066	AR	Shim, .002, Start Year: 04/01/1992
2	DANA070HS1443	AR	Shim, .005, Start Year: 04/01/1992
2	DANA070HS1444	AR	Shim, .010, Start Year: 04/01/1992
2	DANA070HS1445	AR	Shim, .020, Start Year: 04/01/1992
2	86505070	AR	Shim, .030, Start Year: 04/01/1992
3	86002343	2	Plate, Retainer, Start Year: 04/01/1992
4	86505834	12	Screw, Cap, HH, G8, 7/16"-14 x 1-1/4", Start Year: 04/01/1992
5	DANA070HR114	12	Ring, Retainer, Extension, Start Year: 04/01/1992
6	86020263	4	Spacer, Flat, Start Year: 04/01/1992
7	82852190	2	Gear, Input, Start Year: 04/01/1992
8	DANA070GU102	6	Gear, Planet, Start Year: 04/01/1992
9	PL	6	Pin, Planet, Start Year: 04/01/1992
10	DANAH504658	564	Roller, Needle, Bearing, Thrust, Start Year: 04/01/1992
11	DANA070HS121	6	Spacer, Flat, Start Year: 04/01/1992
12	86020262	2	Flange Assy., Planetary Includes: Ref. 5 & 9, Start Year: 04/01/1992
14	DANA070HM1701	4	Screw, Cap, Socket Hd., Start Year: 04/01/1992
15	86504105	2	Plug, Pipe, Start Year: 04/01/1992

PREVIEW - YOUFIXTHIS.COM

Download full manual at youfixthis.com

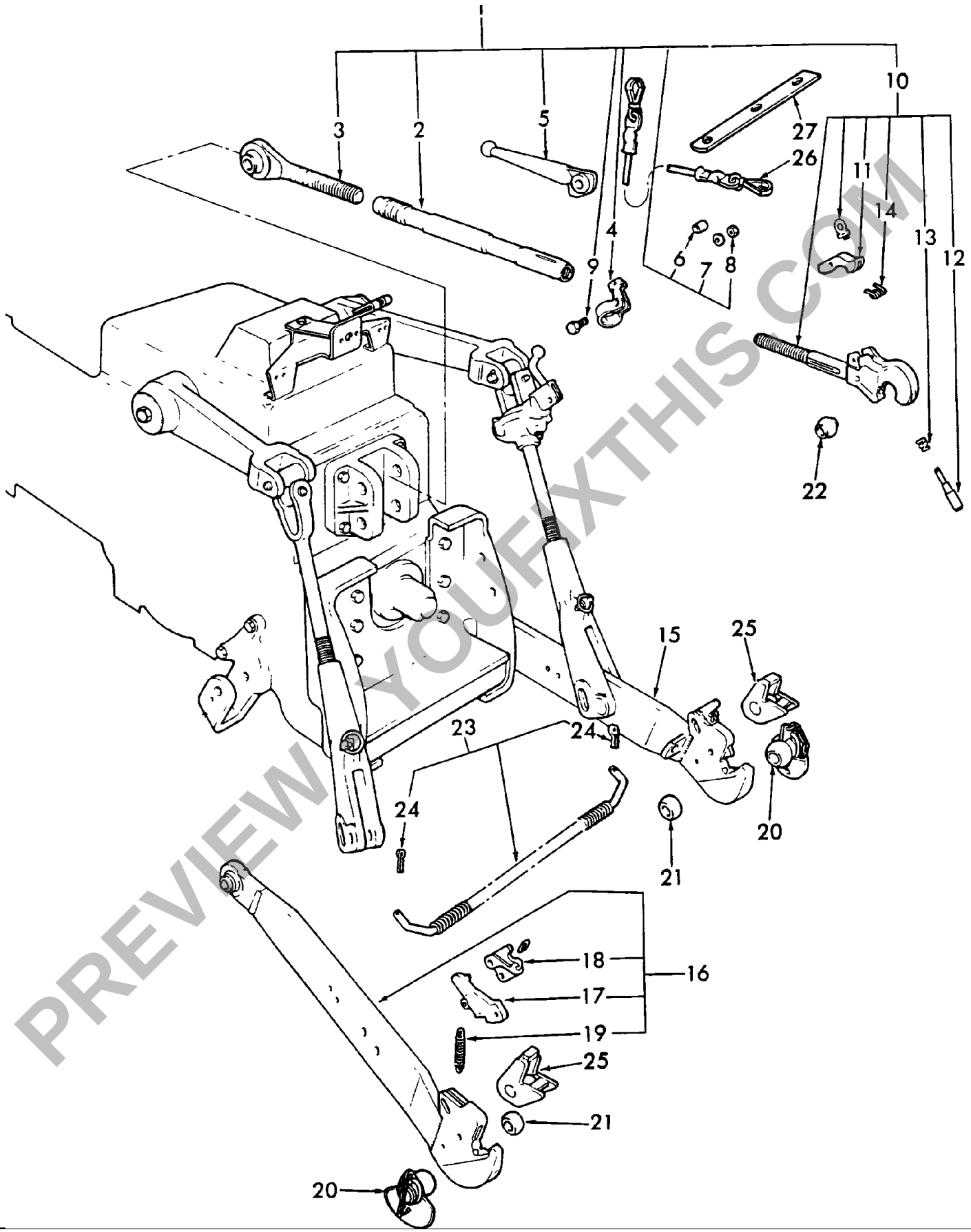

PREVIEW YOUFIXTHIS.COM

Download full manual at youfixthis.com

06E01 OIL PUMP, OIL PAN & RELATED PARTS

Ref	Part Number	Qty	Description
36	80680	2	Washer, Lock, 3/8", Start Year: 01/01/1982
37	80702	2	Washer, 3/8", Start Year: 01/01/1982
38	88044	2	Screw, Cap, HH, G5, 3/8"-16 x 1-1/2", Start Year: 01/01/1982
39	E9NN6L692AA	1	Plug, Cup, 2.197" x 2.200", Start Year: 01/01/1982
40	E1NN6676BB	1	Pan, Start Year: 01/01/1982
40	E7NN6676AB	1	Pan, 7810, Start Year: 02/01/1988
41	87800945	1	Gasket, Start Year: 01/01/1982
42	C9NN6734A	1	Gasket, 3/4" ID x .06" Thk, Drain Plug, Start Year: 01/01/1982
43	C9NN6730B	1	Plug, Start Year: 01/01/1982
44	80680	32	Washer, Lock, 3/8", Start Year: 01/01/1982
45	88011	30	Screw, Cap, HH, G5, 3/8"-16 x 1-1/4", Start Year: 01/01/1982
	20304	2	Screw, Cap, HH, G5, 3/8"-16 x 5-1/2", Start Year: 01/01/1982
46	E9NN6L692AA	1	Plug, 2.197" x 2.2", Start Year: 02/01/1988
46	E9NN6L692BA	1	Plug, 2.217" x 2.22", Start Year: 02/01/1988
47	D0NN6A798A	1	Stop, Start Year: 02/01/1988
48	87800008	1	Shaft & Gear, Start Year: 02/01/1988
49	C7NN6A605A	1	Shaft, Start Year: 02/01/1988
50	C7NN6659A	1	Gasket, Start Year: 02/01/1988
51	380515S	2	Washer, 3/8", Start Year: 02/01/1988
52	378310S36	2	Bolt, 3/8"-16 x 1.38", Start Year: 02/01/1988
53	87909	1	Screw, Cap, HH, G5, 1/2"-13 x 1", Start Year: 02/01/1988
54	EAD6628A	1	Spring, Start Year: 02/01/1988
55	D9NN6623AA	1	Screen Assy., Start Year: 02/01/1988
56	C7NN6615A	1	Cover & Inlet Tube, Start Year: 02/01/1988
57	372287S36	2	Screw & Washer, 5/16"-18 x 3/4", Start Year: 02/01/1988
58	E7NN6600AA	1	Pump Assy., Start Year: 02/01/1988

PREVIEW - YOUFIXTHIS.COM

Download full manual at youfixthis.com

07L03 CLUTCH ASSEMBLY & CHARGE PUMP - 18 X 9 POWERSHIFT

Ref	Part Number	Qty	Description
1	FKF41210	1	Bearing, Ball, Start Year: 03/01/1989
2	FK4008136	1	Shaft, Input, Start Year: 03/01/1989
3	FKF40214	1	Bearing, Ball, Start Year: 03/01/1989
4	FKF40212	1	Bearing, Ball, Start Year: 03/01/1989
5	FK4008137	1	Shaft, Transfer, Start Year: 03/01/1989
5	FK4008216	1	Shaft, Transfer, 40 KPH, Start Year: 08/01/1991
6	FKF621311G	1	Bearing, Roller, Start Year: 03/01/1989
7	NS	1	Speed Clutch Assy., 2/A See Fig. 7L4, Start Year: 03/01/1989
8	NS	1	Speed Clutch Assy., 3/B See Fig. 7L4, Start Year: 03/01/1989
9	NS	1	Speed Clutch Assy., 1/C See Fig. 7L4, Start Year: 03/01/1989
10	FKF621208N	1	Bearing, Roller, Start Year: 03/01/1989
11	FKF621310M	1	Bearing, Roller, Start Year: 03/01/1989
12	FK4008138	1	Countershaft, Start Year: 03/01/1989
12	FK4008218	1	Countershaft, 40 KPH, Start Year: 08/01/1991
13	NS	1	Range Clutch Assy., Forward 2,, Start Year: 03/01/1989
14	NS	2	Range Clutch Assy., Forward 1 & Reverse, See Fig. 7L5, Start Year: 03/01/1989
15	FK4008115	1	Shaft, PTO, Start Year: 03/01/1989
16	FK4008213	1	Pump, Charge, Start Year: 03/01/1989
17	FKF37020133G	1	O-Ring, Start Year: 03/01/1989
18	FKF37020129G	1	O-Ring, Start Year: 03/01/1989
19	9707515	6	Screw, Cap, HH, G5, 5/16"-18 x 1-3/4", Start Year: 03/01/1989
20	86500785	6	Washer, Flat, Start Year: 03/01/1989
21	9671424	2	Ring, Snap, Ext, 1.38", Start Year: 03/01/1989
22	FKYZ101915	1	Bearing, Ball, Start Year: 03/01/1989
23	25954	1	Ring, Snap, Int, 2.813", Start Year: 03/01/1989

PREVIEW - YOUFIXTHIS.COM

Download full manual at youfixthis.com

Ref	Part Number	Qty	Description
56	C0NN9E581A	2	Ring, Start Year: 01/01/1982
57	87008S92	2	O-Ring, .375" ID x .070" Thk, Start Year: 01/01/1982
58	378296S	1	Shim, No Longer Serviced - NHNA, Start Year: 01/01/1982
59	D8NN9D529AA	1	Washer, No Longer Serviced - NHNA, Start Year: 01/01/1982
60	272464	1	Ring, Snap, Ext, .375", Start Year: 01/01/1982
61	E780CL9	1	Quadrant, Years: 01/01/1982-01/31/1984
61	E2NN9C563AA	1	Quadrant, Start Year: 02/01/1984
62	80684	1	Washer, Lock, #10, Start Year: 01/01/1982
63	54712S36	1	Screw, HH, #10-24 x 7/8", Start Year: 01/01/1982
64	D6NN9C534C	1	Lever, Start Year: 01/01/1982
65	80684	1	Washer, Lock, #10, Start Year: 01/01/1982
66	54712S36	1	Screw, HH, #10-24 x 7/8", Start Year: 01/01/1982
67	C5NE9C555B	1	Spring, No Longer Serviced - NHNA, Start Year: 01/01/1982
67	D8NN9C555CA	1	Spring, 7910, No Longer Serviced - NHNA, Start Year: 01/01/1982
67		1	Spring, Governor, Germany, 8830, Start Year: 10/01/1992
68	C0NN9E580A	1	Pin, Start Year: 01/01/1982
69	C0NN9E582A	1	Nut, No Longer Serviced - NHNA, Start Year: 01/01/1982
70	D8NN9N888AA	1	Cage & Plate Assy., No Longer Serviced - NHNA, Start Year: 01/01/1982
70	E5NN9N898AA	1	Cage & Plate Assy., Nylon, Start Year: 01/01/1982
70	D8NN9D517BA	6	Weight, No Longer Serviced - NHNA, Start Year: 01/01/1982
71	D8NN9C566CA	1	Camshaft Assy., No Longer Serviced - NHNA, Years: 01/01/1982-01/31/1984
71	E2NN9C566AA	1	Camshaft Assy., Start Year: 02/01/1984
72	D8NN9N890AA	3	Dowel, Start Year: 01/01/1982
73	D8NN9N895AA	2	Seal, Start Year: 01/01/1982
74	D8NN9E592AA	2	Bearing, No Longer Serviced - NHNA, Start Year: 01/01/1982
75	D8NN9E591BA	2	Shim, .004, No Longer Serviced - NHNA, Start Year: 01/01/1982
76	D8NN9E591AA	2	Shim, .008, No Longer Serviced - NHNA, Start Year: 01/01/1982
77	D8NN9C550AA	1	Pad, No Longer Serviced - NHNA, Start Year: 01/01/1982
78	D8NN9C553AA	1	Bearing, No Longer Serviced - NHNA, Start Year: 01/01/1982
79	D8NN9N905AA	6	Pad, No Longer Serviced - NHNA, Years: 01/01/1982-01/31/1984
79	E2NN9N905AA	6	Pad, Start Year: 02/01/1984
80	D8NN9N906AA	1	Plate, Start Year: 01/01/1982
81	D8NN9N907AA	1	Ring, Start Year: 01/01/1982
82	D8NN9N903AA	1	Washer, Start Year: 01/01/1982
83	D8NN9N893AA	1	Sleeve, Start Year: 01/01/1982
84	D8NN9P632AA	AR	Washer, Thrust, 1.45mm, Start Year: 01/01/1982
84	D8NN9P632BA	AR	Washer, Thrust, 1.80mm, Start Year: 01/01/1982
84	D8NN9P632CA	AR	Washer, Thrust, 2.15mm, Start Year: 01/01/1982
84	D8NN9P632DA	AR	Washer, Thrust, 2.50mm, Start Year: 01/01/1982
85	D8NN9N892AA	1	Disc, Start Year: 01/01/1982
86	E0NN9P659AA	1	Spacer, Start Year: 01/01/1982

Engine Speed Sensor (Attached to pump) can be found in Section 12 Pg. 18, Items 33-33A.

PREVIEW - YOUFIXTHIS.COM

Download full manual at youfixthis.com

Ref	Part Number	Qty	Description
39	380923S2	2	Screw, #8, Start Year: 01/01/1983
40		1	Harness Assy., Turn Signal, Start Year: 01/01/1983
41	D6NN13A350A	1	Switch Assy., Emergency Warning, Start Year: 01/01/1983
41	E4NN13A350AA	1	Switch Assy., Emergency Warning, 7810, Start Year: 02/01/1988
41	72GB13464BA	1	Bulb, 7810, Start Year: 02/01/1988
42	E4NN13N326AA	2	Screw, Switch Mountingv, Start Year: 11/01/1985
43	87812	3	Washer, Lock, #8, 7910,8210,TW5,TW15,TW25,TW35 8530,8630,8730,8830, Start Year: 01/01/1983
44	384450S36	3	Screw, #8-12 x .50, Start Year: 01/01/1983
45	263117	4	Cable Tie, 3/32" x 11-1/2" L, Start Year: 01/01/1983
46	83976853	2	Clip, Start Year: 01/01/1983
47	82003527	1	Switch Assy., Air Cleaner Restrictor, Start Year: 01/01/1983
48	81873524	1	Switch, Oil Pressure, Start Year: 01/01/1983
48	81873524	1	Switch, Oil Pressure, 7810, Start Year: 02/01/1988
49	9821300	1	Horn Assy., Start Year: 01/01/1983
50	D5NN13828C	1	Bracket, Start Year: 01/01/1983
51	D1NN3A566A	1	Grommet, 1/2" ID x 11/32" Thk, Start Year: 01/01/1983
52	34906S2	3	Washer, Lock, Int T, 5/16", Start Year: 01/01/1983
53	80664	3	Washer, 5/16", Start Year: 01/01/1983
54	9635082	3	Nut, G5, 5/16"-18, Start Year: 01/01/1983
55	87872	3	Screw, Cap, HH, G5, 5/16"-18 x 3/4", Start Year: 01/01/1983
56		2	Lamp Assy., See Headlamp Section, Start Year: 01/01/1983
57		1	Plate, L/Cab, Start Year: 01/01/1983
57		1	Plate, W/Cab, Start Year: 01/01/1983
58		1	Bracket, L/Cab, Start Year: 01/01/1983
58		1	Bracket, W/Cab, Start Year: 01/01/1983
59		1	Plate, W/Cab, Mounted to Cab, Start Year: 01/01/1983
60	80682	AR	Washer, Lock, 1/4", Start Year: 01/01/1983
61	7770	AR	Nut, G5, 1/4"-20, Start Year: 01/01/1983
62		AR	Screw, Rd Hd, 1/4"-20 x 5/8", Start Year: 01/01/1983
63	38228S36	AR	Screw, Pan Hd, 1/4"-20 x 5/8", Start Year: 01/01/1983
64	D6NN15N555A	1	Grommet, L/Cab, Start Year: 01/01/1983
64	D5NN14603K	1	Grommet, W/Cab, Start Year: 01/01/1983
65	D8NN13N775BA	1	Lamp Assy., License Plate, L/Cab Refer to Fig. 11C7E Includes:, Start Year: 01/01/1982
65	E2NN13465BA	1	Bulb, Start Year: 01/01/1982
65		2	Washer, Start Year: 01/01/1982
65		2	Nut, Start Year: 01/01/1982
65		2	Screw, Start Year: 01/01/1982
65		1	Gasket, Lamp Plate, Start Year: 01/01/1982
65		1	Wire Assy., Ground, Start Year: 01/01/1982
65		1	Wire Assy., L/Cab 39.00", Start Year: 01/01/1982
65		1	Wire Assy., W/Cab, Start Year: 01/01/1982

PREVIEW - YOUFIXTHIS.COM

Download full manual at youfixthis.com

8530 6 CYL AG TRACTOR (3/90-12/93)

11K02 LAMP ASSEMBLY - LICENSE PLATE - D.I.A. - U.S. (11-85/)

Ref	Part Number	Qty	Description
	EFPN17N390A	1	Kit, Lamp Assy. Includes: Ref. 1 thru 5, Start Year: 11/01/1985
1	D9NN17A385AA	1	Bracket Assy., Start Year: 11/01/1985
2	E3NN17733AA	AR	Clamp, 5/16"-18 x 2.88, Start Year: 11/01/1985
2	E3NN17733AA	AR	Clamp, 5/16"-18 x 3.50, Start Year: 11/01/1985
3	80681	2	Washer, Lock, 5/16", Start Year: 11/01/1985
4	9635082	2	Nut, G5, 5/16"-18, Start Year: 11/01/1985
5	D2NN17A393A	1	Lamp Assy., License Plate Includes:, Start Year: 11/01/1985
5	EGPN13564AA	1	Lens, Start Year: 11/01/1985
5	C7SB13370B	1	Bulb, Start Year: 11/01/1985
6	88703	2	Bolt, 1/4"-20 x 3/4", Start Year: 11/01/1985
7	80682	2	Washer, Lock, 1/4", Start Year: 11/01/1985
8	7770	2	Nut, G5, 1/4"-20, Start Year: 11/01/1985
9	D5NN13N315A	1	Wire Assy., Start Year: 11/01/1985

PREVIEW - YOUFIXTHIS.COM

Download full manual at youfixthis.com

14C02 HOOD PANELS, GRILLE & RELATED PARTS - TW5, TW15, 8530, 8630

Ref	Part Number	Qty	Description
1	D8NN16A724CB	1	Panel Assy., W/Cab, Start Year: 01/01/1983
1	D8NN16615GB		Panel, L/Cab, Start Year: 01/01/1983
1A	387184S36	4	Screw Assy., Hex, 5/16"-18 x .94, Start Year: 01/01/1983
1B	9626645	4	Nut, Speed, 5/16"-18, Start Year: 01/01/1983
2	D6NN16N761D	1	Support Assy., Start Year: 01/01/1983
3	D4NN8A256A	1	Seal, Start Year: 01/01/1983
4	D5NN18K293A	2	Grommet, Start Year: 01/01/1983
5	D8NN16N762BA	1	Plate Assy., Start Year: 01/01/1983
6	388613S36	7	Bolt, HH, 3/8"-16 x .75, Start Year: 01/01/1983
7	9626885	1	Seal, Radiator Bottom, Start Year: 01/01/1983
8	D5NN16N760D	1	Support Assy., Rear, Start Year: 01/01/1983
9	304724S36	4	Screw, Cap, HH, G5, 7/16"-14 x 1-1/4", Start Year: 01/01/1983
10	9627712	1	Rail Assy., R.H., Start Year: 01/01/1983
11	E9NN16N765AA11B	1	Rail Assy., L.H., Start Year: 01/01/1983
12	88206	8	Screw, Cap, HH, G5, 3/8"-16 x 1", Start Year: 01/01/1983
12A	88011	4	Screw, Cap, HH, G5, 3/8"-16 x 1-1/4", Start Year: 01/01/1983
13	86521609	4	Nut, Lock, Flg, G5, 3/8"-16, Start Year: 01/01/1983
14	9627669	4	Support, Start Year: 01/01/1983
15	388613S36	8	Bolt, HH, 3/8"-16 x .75, Start Year: 01/01/1983
16	9626903	1	Seal, Radiator, Upper, R.H., Start Year: 01/01/1983
16	9626904	1	Seal, Radiator, Upper, L.H., Start Year: 01/01/1983
17	E2NN8A047BB	1	Panel, L/Lights, Start Year: 01/01/1983
18	D8NN8A133AA98T	1	Grille, Start Year: 01/01/1983
19	E0NN8A067AA	6	Clip, Start Year: 01/01/1983
20	381801S2	6	Screw, #8-18 x .50, Start Year: 01/01/1983
21	E7TB8C020BB	1	Emblem, Ford, Start Year: 01/01/1983
22	E2NN8N162AA	1	Gasket, Emblem, Start Year: 01/01/1983
23	9847773	2	Nut, Pal, Flg, M5 x .8, Start Year: 01/01/1983
24	378737S	8	Bumper, Start Year: 01/01/1983
24A	D2NN16N446A	1	Bumper, 8530,8630, Start Year: 01/01/1983
25	D5NN16N770A	2	Grommet, Anti-Rattle, Start Year: 01/01/1983
26	387184S36	2	Screw Assy., Hex, 5/16"-18 x .94, Start Year: 01/01/1983
27	9626645	2	Nut, Speed, 5/16"-18, Start Year: 01/01/1983
28	D9NN8A134AA	1	Panel Assy., Grille, R.H., Start Year: 01/01/1983
28A	D5NN8150A	1	Grille, Outer, R.H., Start Year: 01/01/1983
29	D9NN8A135AA	1	Panel Assy., Grille, L.H., Start Year: 01/01/1983
29A	D5NN8151A	1	Grille, Outer, L.H., Start Year: 01/01/1983
29A	NS	AR	Staple, 1/2" Grille, Bostik, #ST-48 or use Ref. 19 & 20, Start Year: 01/01/1983
30	D5NN16N770A	4	Grommet, Anti-Rattle, Start Year: 01/01/1983
30A	9626907	2	Seal, Radiator Side, 5-1/2" x 4-1/2", Start Year: 01/01/1983
30A	9626908	2	Seal, Radiator Side, 23-1/2" x 2-1/2" x 1-3/4" x 1, Start Year: 01/01/1983

PREVIEW - YOUFIXTHIS.COM

Download full manual at youfixthis.com

15B09 HEATER & AIR CONDITIONER EVAPORATOR & DEHYDRATOR (10-85/)

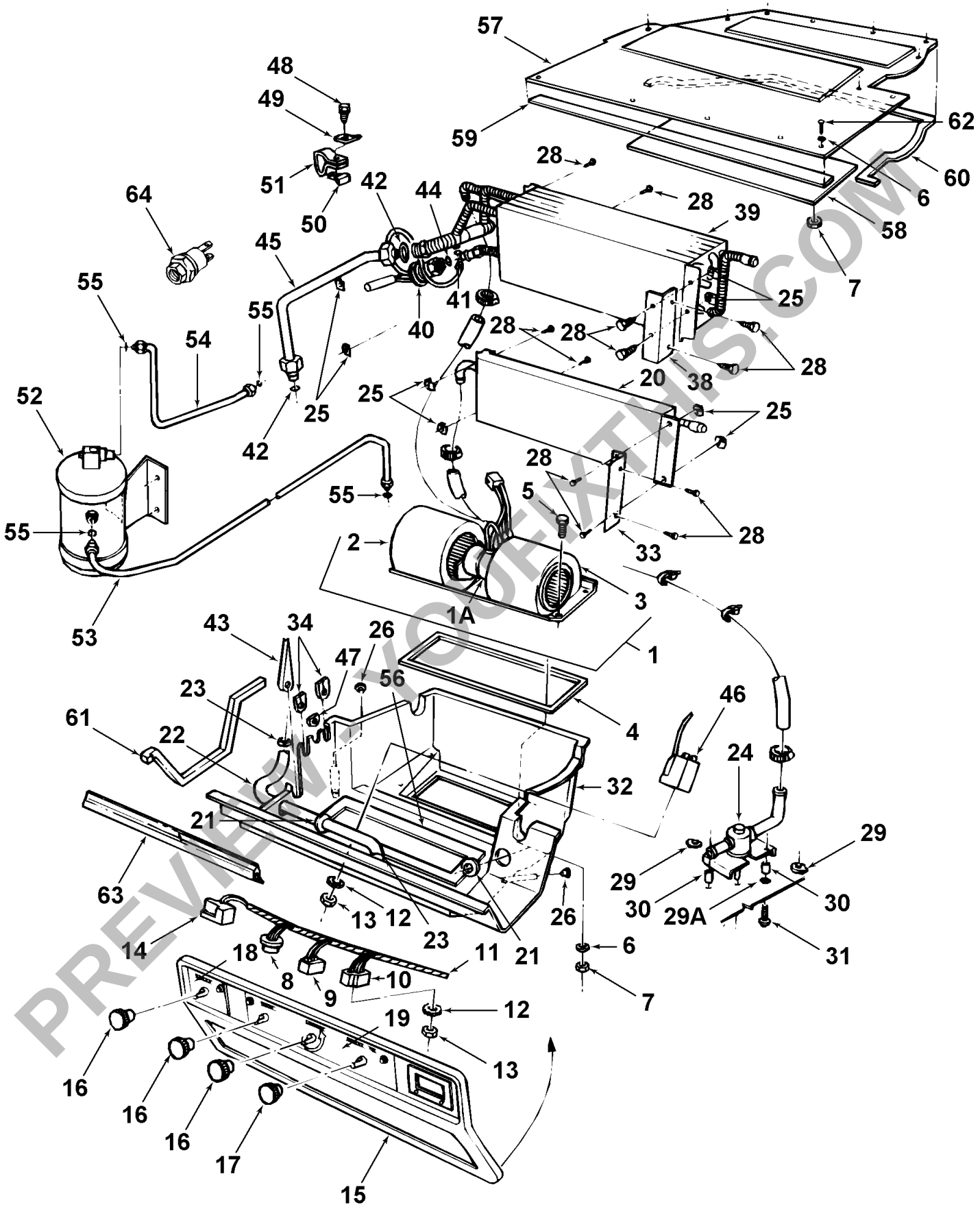

PREVIEW YOUFIXTHIS.COM

Download full manual at youfixthis.com

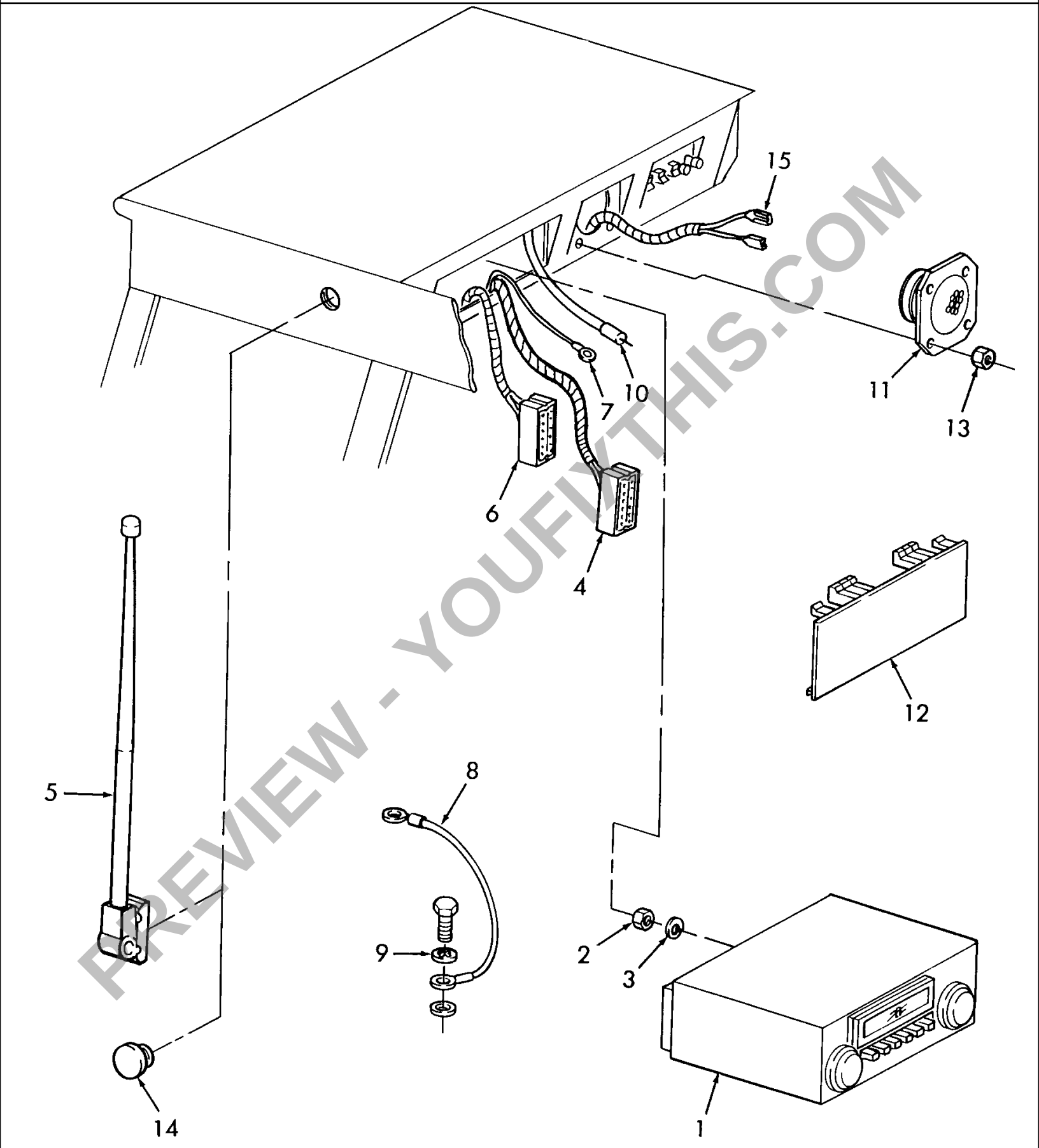

PREVIEW - YOUFIXTHIS.COM

Download full manual at youfixthis.com

7312 QUICK ATTACH FARM LOADER (4/96-)

024 CONTROL VALVE & FITTINGS W/CAB 9843598 & 9861619

Ref	Part Number	Qty	Description
1	SML40600	1	Bracket, Valve Mounting
2	SML46605	1	Valve, 2 Spool Stack
3	PL	2	Bolt, 5/16"-18 x 3
4	PL	1	Bolt, Flat Hd. Machine, 5/16"-18 x 3
5	PL	3	Washer, Lock, 5/16"
6	PL	3	Nut, Hex, 5/16"-18
7	84570	2	Fitting, Elbow 1-1/16"-12 O-Ring x 7/8"-14 Flare x 90 degrees
8	216773	1	Elbow, 90°, Male 37° FL - Male, W/O-Ring, 1/4" Tube
9	SML406531	1	Hose, 1/2" x 54
9	SML413041	1	Hose, 3/4" x 37"
10	86017127	4	Fitting, Elbow 7/8"-14 O-Ring x 1/2" NSPM x 45°
11	SML40649	2	Fitting, Elbow, 1/2" NPTF x 1/2" NPTF x 45 degrees
12	SML60845	2	Fitting, Straight, 1/2" NPTF x 1/2" NPSM
13	SML61478	4	Coupler, Female Quick, 1/2"-14
14	PL	4	Nut, Hex, 3/8"-16
15	PL	4	Washer, Lock, 3/8"
16	516389	2	Pin, Clevis, 1/4" x 1"
17	PL	3	Pin, Cotter, 3/32" x 3/4"
18	SML406561	1	Hose, 1/4" x 48
19	SML366988	1	Hose 1/2" x 54
20	86581690	1	Band, Spiral I.D., Blue
20	86581691	1	Band, Spiral I.D., Red
20	86581692	1	Band, Spiral I.D., Yellow
20	86581693	1	Band, Spiral I.D., Green
21	84570	1	Fitting, Elbow 1-1/16"-12 O-Ring x 7/8"-14
21	322894	1	Fitting, Elbow 1-1/16" O-Ring x 1-1/16" JIC 90 degrees

PREVIEW - YOUFIXTHIS.COM

Download full manual at youfixthis.com

7312 QUICK ATTACH FARM LOADER (4/96-)

047 QUICK ATTACH BUCKETS

Ref	Part Number	Qty	Description
1	W0	1	Bucket, 84" Heavy Duty Quick Attach (Includes cutting edges) {9863776}
1	W0	1	Bucket, 96" Heavy Duty Quick Attach (Includes cutting edges) {9863801}
2	SML280861	1	Cutting Edge, Left Side (84" H.D., 96" H.D.)
3	SML225433	1	Cutting Edge, Bottom (84" Heavy Duty)
3	SML389451	1	Cutting Edge, Bottom (96" Heavy Duty)
4	SML280862	1	Cutting Edge, Right Side (84" H.D., 96" H.D.)

PREVIEW - YOUFIXTHIS.COM

Download full manual at youfixthis.com

070 CONTROL VALVE PLUMBING TO SINGLE SET OF REAR REMOTES, ALTERNATE - 715807002

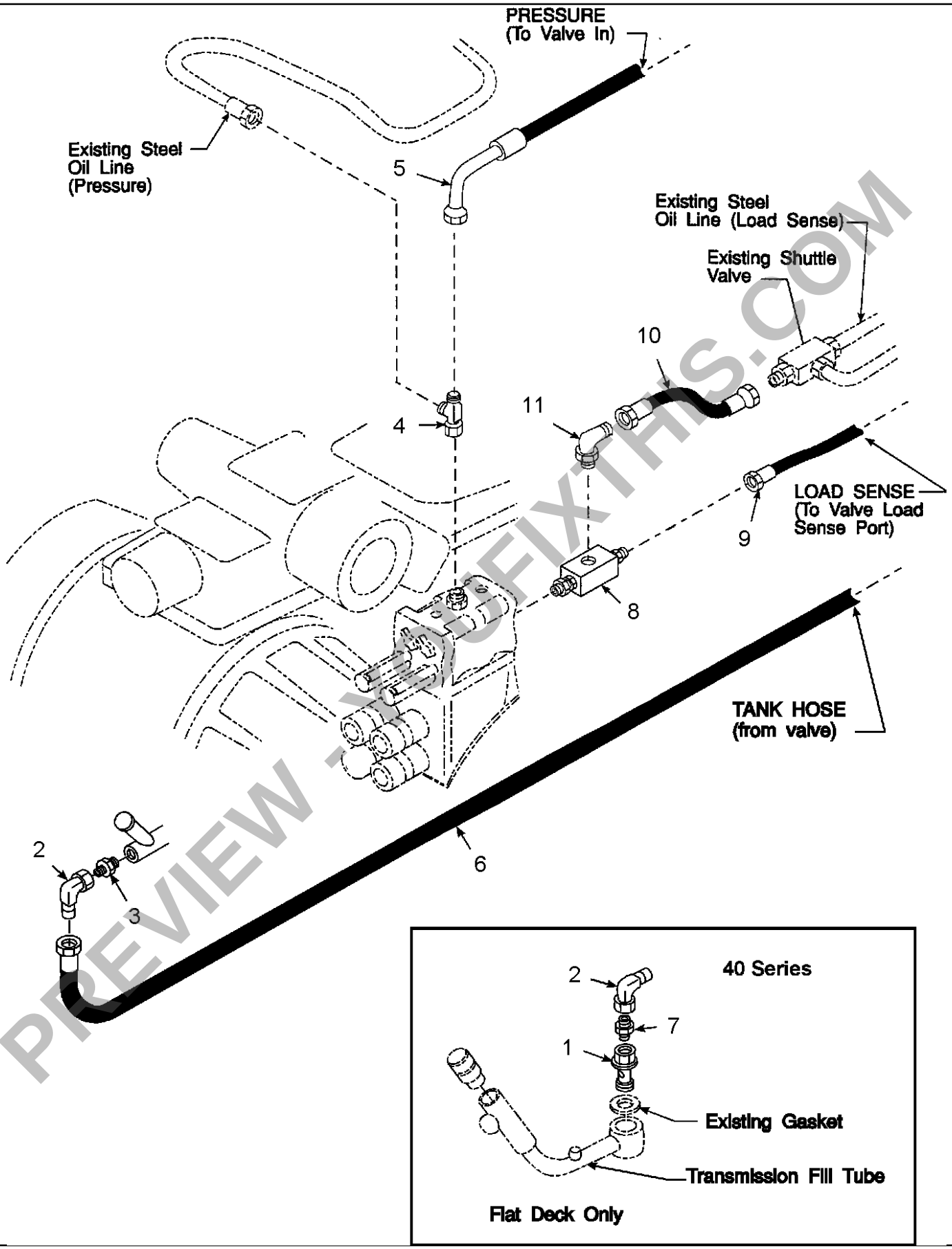

PREVIEW - YOUFIXTHIS.COM

Download full manual at youfixthis.com

7314 QUICK ATTACH FARM LOADER (4/96-)

009 HOSE KIT - 9863774

Ref	Part Number	Qty	Description
1	SML40569	1	Bracket, Quick Coupler
2	SML363541	2	Screw, Hex Head Self Tapping, 1/4-14 x 1-1/2
3	86583553	2	Coupler, Quick, Female
4	86581714	1	Band, Spiral, Blue, 5/8
4	86581715	1	Band, Spiral, Red, 5/8
5	86583561	2	Bushing, 3/4 x 1-1/4 x
6	86583554	2	Spacer, Plastic
7	86581720	5	Tie Strap, 1/2 x 20
8	SML406625	2	Hose, 3/8 x 150
9	SML442971	2	Hose, 3/8 x 120
10	86582532	2	Bushing, 1-1/2 x 2-1/4
11	SML604016	4	Ring, Retaining
12	86581682	3	Band, Spiral, Blue
12	86581683	3	Band, Spiral, Red
13	SML438951	2	Coupler, Two Way
14	SML61376	2	Coupler, Male

PREVIEW - YOUFIXTHIS.COM

Download full manual at youfixthis.com

7314 QUICK ATTACH FARM LOADER (4/96-)

031 MOUNTING KIT - 9863750

Ref	Part Number	Qty	Description
1	SML44172	1	Bracket, Front
2	SML441741	1	Bracket, Midmounting, Left
3	SML441742	1	Bracket, Midmounting, Right
4	SML40695	1	Crosstie
5	SML44173	1	Yoke, Front
6	SML40688	1	Bracket, Lower Step
7	SML40660	1	Step, Upper
8	SML258203	2	Tread, Anti-Slip Surface
9	PL	4	Screw, Cap, 3/4-10 X 2-3/4
10	PL	12	Screw, Cap, 3/4-10 X 2
11	PL	8	Screw Cap, 1/2-13 X 1-1/2
12	PL	2	Screw, Cap, 5/16-18 X 1-3/4
13	PL	20	Washer, Lock, 3/4
14	PL	8	Nut, Lock, 1/2-13
15	PL	2	Nut, Lock, 5/16-18
16	PL	4	Screw, Cap, 3/4-10 X 2-1/2
17	PL	4	Screw, Cap, 5/8-11 X 1-3/4
18	PL	12	Nut, Lock, 3/4-10
19	PL	4	Washer, Lock, 5/8
20	PL	12	Screw, Cap, 3/4-10 X 2-1/4
21	SML39240	2	Decal, Warning, Do Not Tow...
22	SML41259	2	Side Member
23	PL	4	Washer, Flat, 5/8"

PREVIEW - YOUFIXTHIS.COM

Download full manual at youfixthis.com

7314 QUICK ATTACH FARM LOADER (4/96-)

057 MOUNTING PLATE

Ref	Part Number	Qty	Description
1	NS	1	Mounting Plate (Not Sold as a Repair Part)
2	SML42170	2	Decal, Warning
3	SML258204	2	Surfacing, Anti Slip

PREVIEW - YOUFIXTHIS.COM

Download full manual at youfixthis.com

003 SELF-LEVELING VALVE KIT

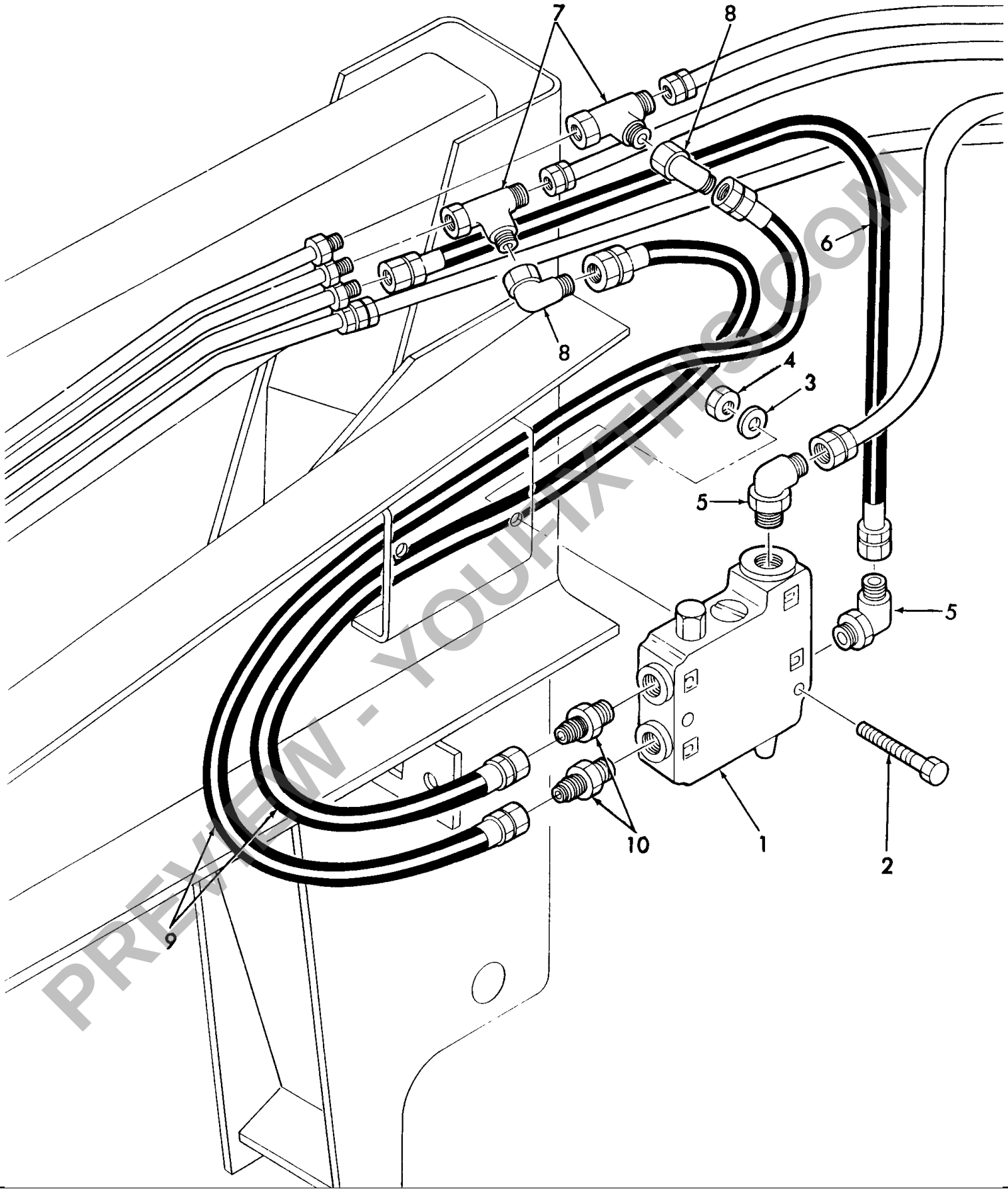

PREVIEW - YOUFIXTHIS.COM

Download full manual at youfixthis.com

PREVIEW ONLY

You're viewing 25 of 891 pages

The full manual includes:

- All 891 pages, complete
- Searchable PDF (find any keyword)
- No watermarks
- Instant download
- Print-ready quality

GET FULL MANUAL NOW

Ford 8530, 8630, 8730, 8830, 7312, 7314, 7412HD-Series, TW5, TW15, TW25, TW35, 7810, 7910, 8210, 5640, 6640, 7740, 7840, 8240, 8340, TS90, TS100, TS110 Parts Catalog



Scan or click anywhere
youfixthis.com

Click anywhere on this page to get the full manual