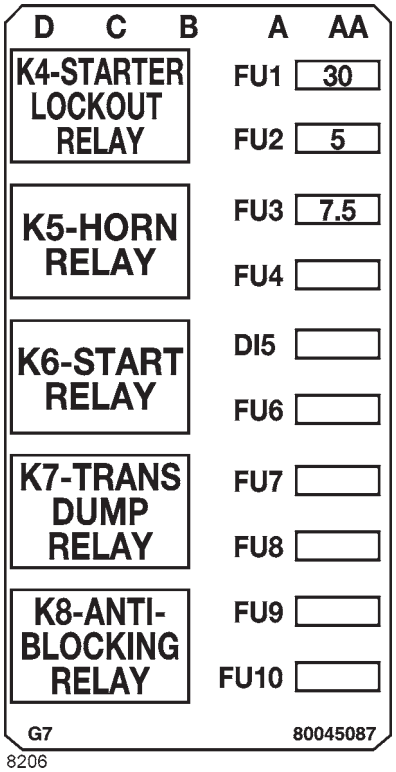

8206

FUSE CIRCUIT IDENTIFICATION

FU1	30 AMP - ENGINE ECM POWER
FU2	5 AMP - ENGINE ECM IGNITION POWER
FU3	7.5 AMP - PILOT CONTROL VALVE, DOME LIGHT,STROBE LIGHT
FU4	SPARE
FU5	SPARE
FU6	SPARE
FU7	SPARE
FU8	SPARE
FU9	SPARE
FU10	SPARE
K4	STARTER LOCKOUT RELAY
K5	HORN RELAY
K6	START RELAY
K7	TRANSMISSION DUMP RELAY
K8	ANTI-BLOCKING RELAY

G7 80045088
8205

FIGURE 3-2

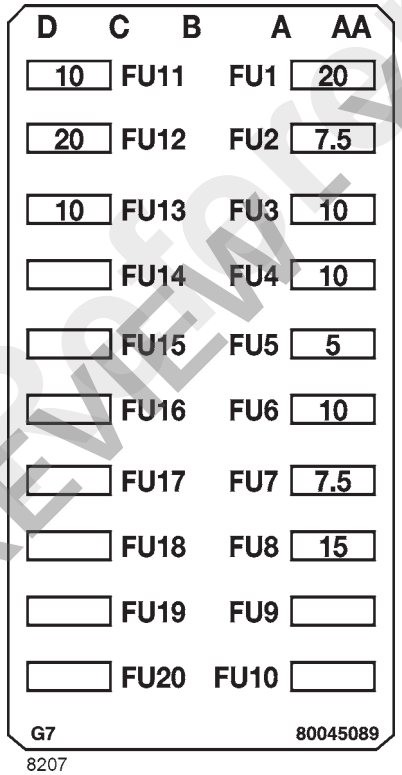

8207

FUSE CIRCUIT IDENTIFICATION

FU1	20 AMP - HEATER, A/C, DEFROSTER
FU2	7.5 AMP - WINDSHIELD WIPER/ WASHER
FU3	10 AMP - PARK BRAKE
FU4	10 AMP - OUTRIGGER ALARM, WINCH
FU5	5 AMP - OUTRIGGER MONITOR, BRAKE LTS., WAIT TO START LAMP, HOURMETER, FUEL GAGE,
FU6	10 AMP - ANTI-BLOCKING
FU7	7.5 AMP - TRANS. OIL COOLER
FU8	15 AMP - 3RD WRAP, STEERING VALVE
FU9	SPARE
FU10	SPARE
FU11	10 AMP - IGNITION SWITCH
FU12	20 AMP - HEAD/WORK LIGHTS
FU13	10 AMP - TURN SIGNALS

G7 80045090
8208

FIGURE 3-3

PREVIEW YOUFIXTHIS.COM

Download full manual at youfixthis.com

a1204a

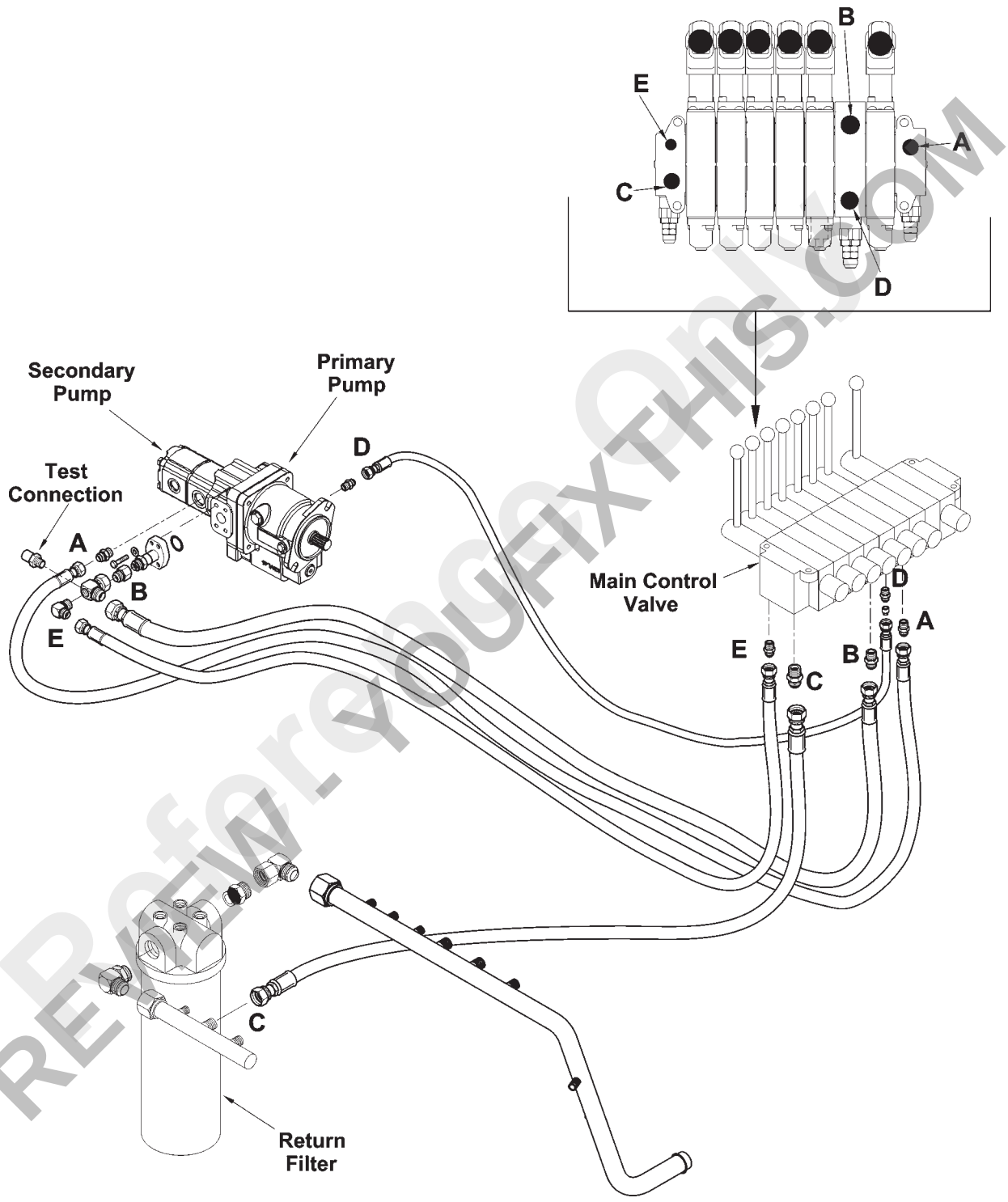

Primary and Secondary System
Pressure and Return Circuits (Control/Load Sense

FIGURE 4-12

Preview Only. YOUFIXTHIS.COM

Download full manual at youfixthis.com

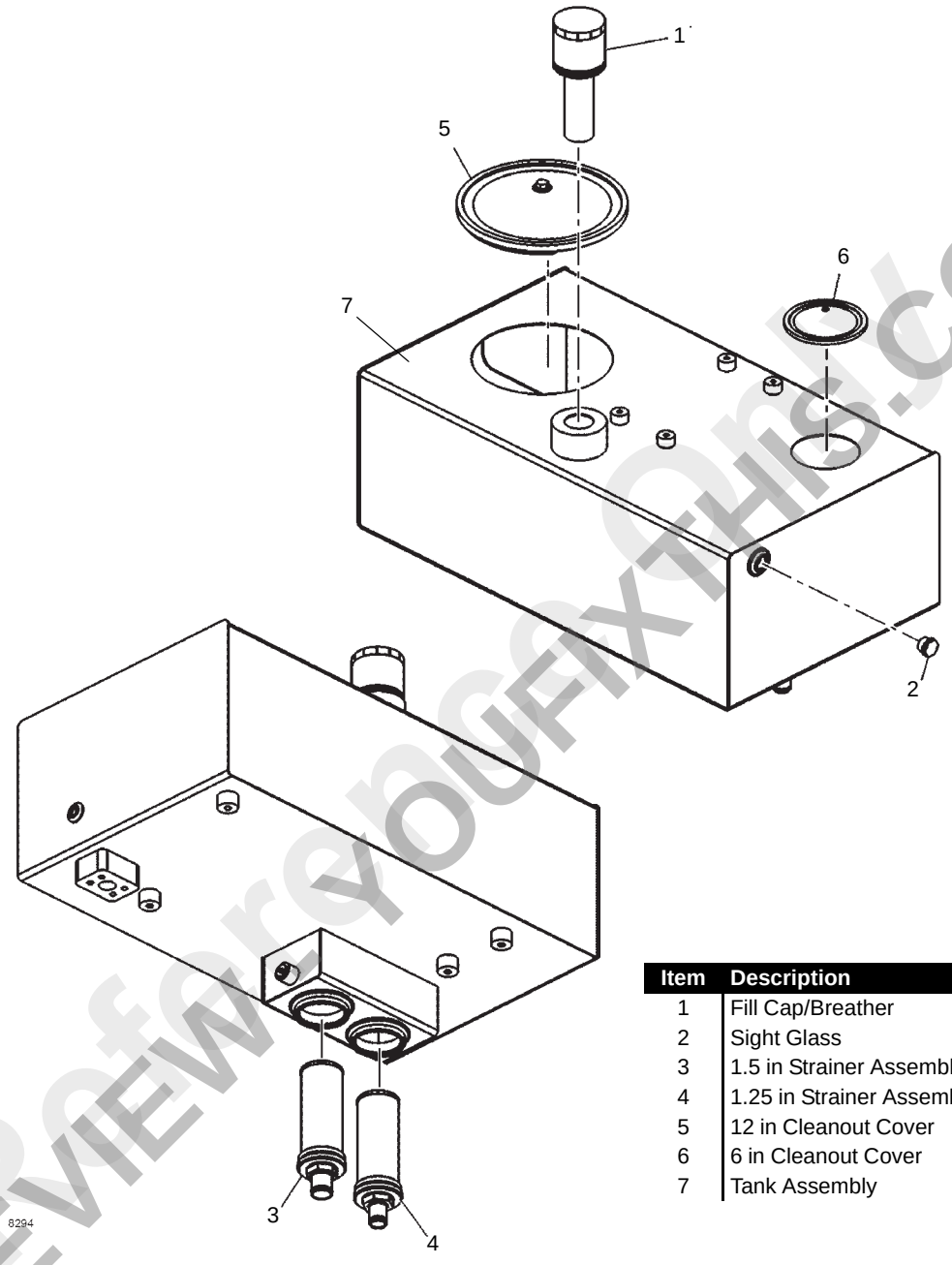

Item	Description
1	Fill Cap/Breather
2	Sight Glass
3	1.5 in Strainer Assembly
4	1.25 in Strainer Assembly
5	12 in Cleanout Cover
6	6 in Cleanout Cover
7	Tank Assembly

FIGURE 4-11

PREVIEW Reference Only YOUFIXTHIS.COM

Download full manual at youfixthis.com

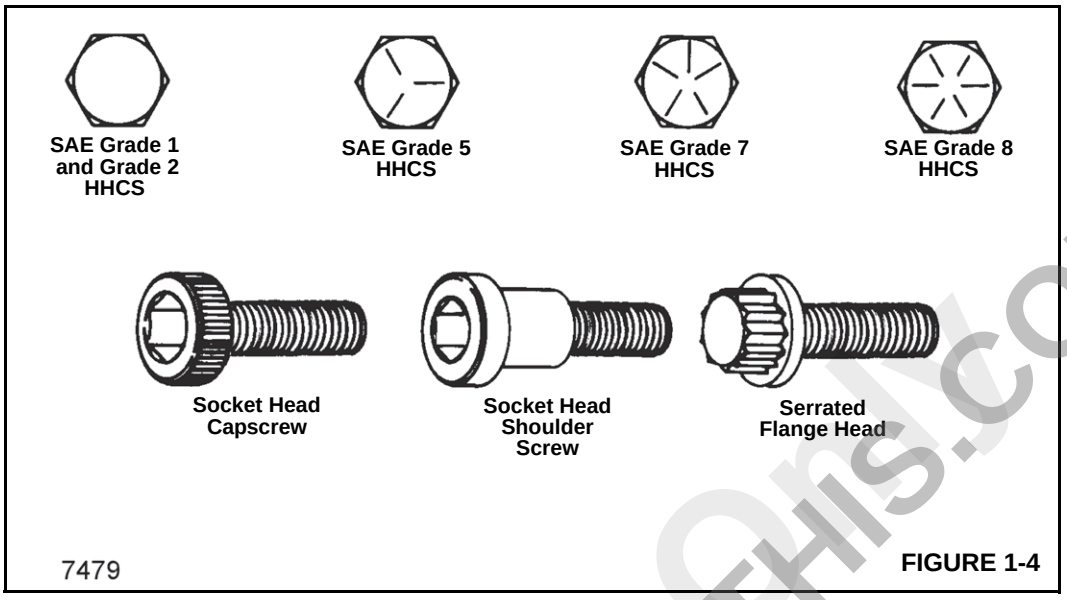

FIGURE 1-4

Table 1-1: UNC (Coarse) Thread: Torque Values for Zinc-Flake Coated and Untreated Fasteners

Bolt Diameter - Inches

Torque Values (Pounds-Foot, Maximum/Minimum)

	SAE Grade	1/4	5/16	3/8	7/16	1/2	9/16	5/8	3/4	7/8	1	1-1/8	1-1/4	1-1/2
Zinc-Flake	**5**	7	14	25	40	61	88	121	213	342	512	636	884	1532
	8	10	20	36	57	86	124	171	301	483	723	1032	1433	2488
Untreated	**5**	9.0	19	32	52	78	114	156	270	416	606	813	1141	2028
		7.7	17	30	48	72	106	144	249	384	560	751	1053	1865
	8	12.5	26	48	73	120	161	234	385	615	929	1342	2043	3276
		11.5	24	44	67	110	143	216	355	567	857	1234	1885	3024

NOTE: Studs shall be torqued using capscrew values when grade is known.

Table 1-2: UNF (Fine) Thread: Torque Values for Zinc-Flake Coated and Untreated Fasteners

Bolt Diameter - Inches

Torque Values (Pounds-Foot, Maximum/Minimum)

	SAE Grade	1/4	5/16	3/8	7/16	1/2	9/16	5/8	3/4	7/8	1	1-1/8	1-1/4	1-1/2
Zinc-Flake	**5**	8	15	28	44	66	95	132	229	364	543	785	944	1654
	8	11	22	39	61	94	134	186	323	514	766	1109	1530	2682
Untreated	**5**	10	21	36	57	88	126	182	312	458	658	882	1251	2288
		9	19	34	53	81	116	167	287	421	606	814	1155	2105
	8	14.5	26	53	85	125	177	250	425	672	1009	1500	2092	3640
		13.5	24	49	79	115	163	230	393	620	931	1380	1925	3360

NOTE: Studs shall be torqued using capscrew values when grade is known.

PREVIEW ONLY youfixthis.com

Download full manual at youfixthis.com

SECTION 1
INTRODUCTION

SECTION CONTENTS

Directional Reference 1-1
Identification Plate 1-1
Specifications 1-2
General Service Information 1-4
Cleaning Instructions 1-4
Complete Assemblies 1-4
Parts with Machined Surfaces 1-4
Rough Parts 1-4
Rubber Parts 1-4
After Cleaning 1-4
To Prevent Corrosion 1-4
O-ring, Seal and Elastic Nut Replacement 1-5
Hoses and Tubes 1-5
Inspection 1-5
Installation 1-5
Bearings 1-5
Removal 1-5
Cleaning 1-5
Installation 1-5
Hydraulic Pressure Testing 1-5
Fatigue of Welded Structures 1-5
Loctite® 1-6
Fasteners and Torque Values 1-6
Weld Studs 1-10
Hydraulic Fitting 1-11

This manual contains information on maintenance, service and repair of the Models 3330F/FL & YB4409/XL cranes. Major components and systems are included, except service on the engine. This information will be found in the engine manufacturer's service manual.

DIRECTIONAL REFERENCE

All directional references in this manual, unless otherwise noted, are viewed from the normal operator's working position at the main controls. "LEFT" is the operator's left and "RIGHT" is the operator's right.

IDENTIFICATION PLATE

When assistance is required for parts and service, be sure to include the model number and serial number of the crane in the correspondence. Location of serial number plate is shown in Figure 1-1.



Crane S/N Location

FIGURE 1-1

PREVIEW ONLY YOUFIXTHIS.COM

Download full manual at youfixthis.com

TROUBLESHOOTING

Finding a problem in the electrical system is not difficult if you know basic electricity and understand the arrangement of the electrical system. Use the wiring diagrams in *Schematics/Wiring Diagrams*, page 12-1 as your guide.

Accurate testing equipment is also necessary. The instruments normally used are a voltmeter, ammeter, ohmmeter and test light.

Many times the problem can be found by visual inspection of the components in the circuit. Corrosion on terminals, loose connections or bad wiring are the causes of many problems.

Each circuit in the system has a fuse for protection against overloads. Remember that a burnt fuse is an indication of an overload or **SHORT** circuit, not an **OPEN** circuit.

If you did not find the cause of the problem during the visual inspection, use a voltmeter to check the voltage at several points in the circuit, or measure voltage drop across the component. Normally, the best method is to start at the furthest component in the circuit and move backwards toward the power supply. An ohmmeter can be used to measure the resistance in any component. Remember to disconnect the component from the power supply before you connect the ohmmeter.

Table 3-7
Troubleshooting

Problem	Possible Cause	Solution
Alternator does not charge	**1.** Alternator belt loose or broken.	**1.** Replace and/or tighten to specification.
	2. Worn brushes or open brush leads or connections.	**2.** Replace or repair alternator.
	3. Open circuit, short circuit or ground stator winding.	**3.** Replace alternator.
	4. Fault in voltage regulator.	**4.** Replace voltage regulator.
	5. Short circuit or open circuit in rectifier diodes.	**5.** Replace or repair alternator.
	6. Open circuit or short circuit in rotor (field) winding.	**6.** Replace alternator.
	7. Wires connected wrong, loose, or broken.	**7.** See wiring diagram. Repair or replace wires.
	8. Dirty slip rings or bad slip ring connections.	**8.** Inspect slip rings. Clean or repair as required.
High charging rate (battery at full charge)	**1.** Low electrolyte level in battery.	**1.** Add distilled water.
	2. Fault in wiring system.	**2.** Repair or replace faulty wiring.
	3. Loose or dirty connections.	**3.** Clean and tighten connections.
	4. Malfunction in voltage regulator.	**4.** Replace voltage regulator.
Low charging rate	**1.** Loose or worn alternator belt.	**1.** Adjust or replace belt.
	2. Bad alternator.	**2.** Replace or repair.
	3. Bad battery.	**3.** Replace battery.
	4. Low electrolyte level.	**4.** Add distilled water.
	5. Short circuit in system.	**5.** Check and repair.
	6. Worn alternator.	**6.** Test, replace or repair alternator.
	7. Malfunctioning voltage regulator.	**7.** Replace the voltage regulator.
	8. Low engine speed.	**8.** Run engine at higher speed.

PREVIEW ONLY - YOUFIXTHIS.COM

Download full manual at youfixthis.com

SPECIFICATIONS

ENGINE

Make and Model	Cummins QSB3.3 Tier 4i diesel
Type of Aspiration	Turbocharged
Horsepower	74.6 kW (100 hp) @ 2600 rpm
Low Idle Speed	800 rpm
Maximum Engine Speed	2600 rpm

BOOM

Construction	Telescopic, welded box sections
Number of Sections	Three section, full proportional (Standard) Four section (Optional)
Boom Length (From Boom Pivot Point)	
Short Boom	2.95 m (9 ft 8 in) to 6.45 m (21 ft 3 in)
Long Boom	3.89 m (12 ft 8 in) to 9.20 m (30 ft 2 in)

MAST ROTATION - 360°

Mast Bearing (Diameter)	860.6 mm (33.884 in)
Swing Drive Mechanism	Hydraulic motor driven gearbox
Swing Speed	2 rpm

ELECTRICAL

Type	12 volts, direct current
Alternator	120 amps
Battery	90 amp/hr

FUEL TANK

Capacity	64 l (17 gal)

HYDRAULIC SYSTEM

Primary Pump	Variable displacement piston pump
Secondary Pump	Gear, two-section
Main Control Valves	
Standard Outriggers	Six-section, closed center, load sense, with individual section compensation
Independent Outriggers	Eight-section, closed center, load sense, with individual section compensation
Swing Motor	Single section, gerotor-type
Hoist Motor	Fixed displacement, axial piston
Hydraulic Filters	One 10-micron filter in line from valves One 30-mesh suction filter inside hydraulic tank
Hydraulic Cylinders	Double-acting cylinders for lift, crowd, steering and outriggers
Hydraulic Tank	147.6 l (39 gal) capacity, steel construction with internal baffles

PREVIEW - YOUFIXTHIS.COM

Download full manual at youfixthis.com

SERVICE/CHECK	*INTERVAL (Whichever Occurs First							See Page
	Daily Before Operation	50 Hours Weekly	100 Hours Two Weeks	250 Hours Monthly	500 Hours Three Months	1000 Hours Six Months	2000 Hours Yearly	
Inspect the Anti-Double Blocking System	X							5-12
Inspect the Wire Rope	X							5-12
Inspect Reeving, Clamps and Connections	X							5-12
Inspect the Lifting Hook	X							5-12
Inspect Safety Devices	X							5-12
Check Controls Operation	X							5-12
Check Engine Crankcase Oil Level	X							5-13
Check Transmission Oil Level	X							5-13
Check Engine Coolant Level	X							5-14
Check Fuel Level	X							5-13
Check Tire Pressure	X							5-16
Drain Water From Engine Fuel Filter/Water Separator	X							5-14
Check Air Cleaner Restriction Indicator	X							5-15
Check Hydraulic Oil Level	X							5-14
Inspect Wire Rope and Sheaves		X						5-17
Apply Grease to All Lubrication Fittings		X						5-17
Lubricate the Boom Slides		X						5-19
Clean/Inspect Air Cleaner Dust Baffle		X						5-16
Inspect the Engine Fan Belts			X					5-20
Check Wheel Nut Torque			X					5-20
Lubricate the Swing Gear and Pinion				X				5-22
Lubricate the Wire Rope				X				5-22
Inspect All Hydraulic Hoses				X				5-21
Replace Engine Crankcase Oil and Filter**				X				5-23
Clean Radiator Fins and Core				X				5-22
Clean Battery and Connections				X				5-21
Torque Critical Bolts				X				5-23
Check Axle Wheel Hub Lubricant Level (2)					X			5-30
Check Axle Housing Lubricant Level					X			5-28
Check Hoist Gearbox Lubricant Level					X			5-28
Lubricate the Outrigger Slides					X			5-27
Add Grease to Swing Gearbox					X			5-27
Replace Fuel Filter (Diesel)					X			5-26
Inspect the Parking Brake Pads					X			5-26

PREVIEW ONLY youfixthis.com

Download full manual at youfixthis.com

ALPHABETICAL INDEX

Accessory Circuits . . . 3-8
Adjusting Hydraulic Pressure Settings . . . 4-12
Anti-Double Block System . . . 4-44
Bearing, Mast and Related Parts . . . 11-14
Bearings . . . 1-5
Booms . . . 11-1
Brake Modulating Valve Repair . . . 9-13
Carwell© Rust Inhibitor . . . 5-37
Charging System . . . 3-4
Cleaning Instructions . . . 1-4
Component Repair . . . 4-50
Description of Operation . . . 7-3
Directional Reference . . . 1-1
Drive Shaft . . . 8-35
Engine Air Intake System . . . 6-5
Engine Cooling System . . . 6-2
Engine Crankcase System . . . 6-1
Engine Electrical System . . . 6-3
Engine Exhaust System . . . 6-5
Engine Fuel System . . . 6-3
Engine Performance . . . 6-1
Engine RPM . . . 6-1
Engine Type . . . 6-1
Final Word . . . 2-4
Front Drive Axle Problems and Diagnosis . . . 8-7
Front Drive Axle Repair . . . 8-8
Front Steering Cylinder . . . 10-17
General Description . . . 4-3
General Service Information . . . 1-4
Governor . . . 6-1
Hoses and Tubes . . . 1-5
Hydraulic Pressure Testing . . . 1-5
Hydraulic System Adjustments . . . 4-11
Hydraulic System . . . 4-8
Identification Plate . . . 1-1
Instrument and Light Circuits . . . 3-6
Introduction . . . 2-1
Introduction . . . 5-1
Lift Circuit . . . 4-29
Main Electrical System . . . 3-2
Main Hoist Assembly . . . 11-9
Main Hoist Circuit . . . 4-38
Maintenance And Adjustments . . . 9-5
Maintenance . . . 5-2
O-ring, Seal and Elastic Nut Replacement . . . 1-5
Outrigger Circuits . . . 4-47
Outriggers . . . 11-22
Parking Brake Adjustment . . . 4-15
Parking Brake Repair . . . 9-8
Preventive Maintenance . . . 5-5
Rear Steering Axle Repair . . . 8-32
Rear Steering Cylinder . . . 10-14
Relief Valve Pressure Check . . . 10-3

PREVIEW ONLY YOUFIXTHIS.COM

Download full manual at youfixthis.com

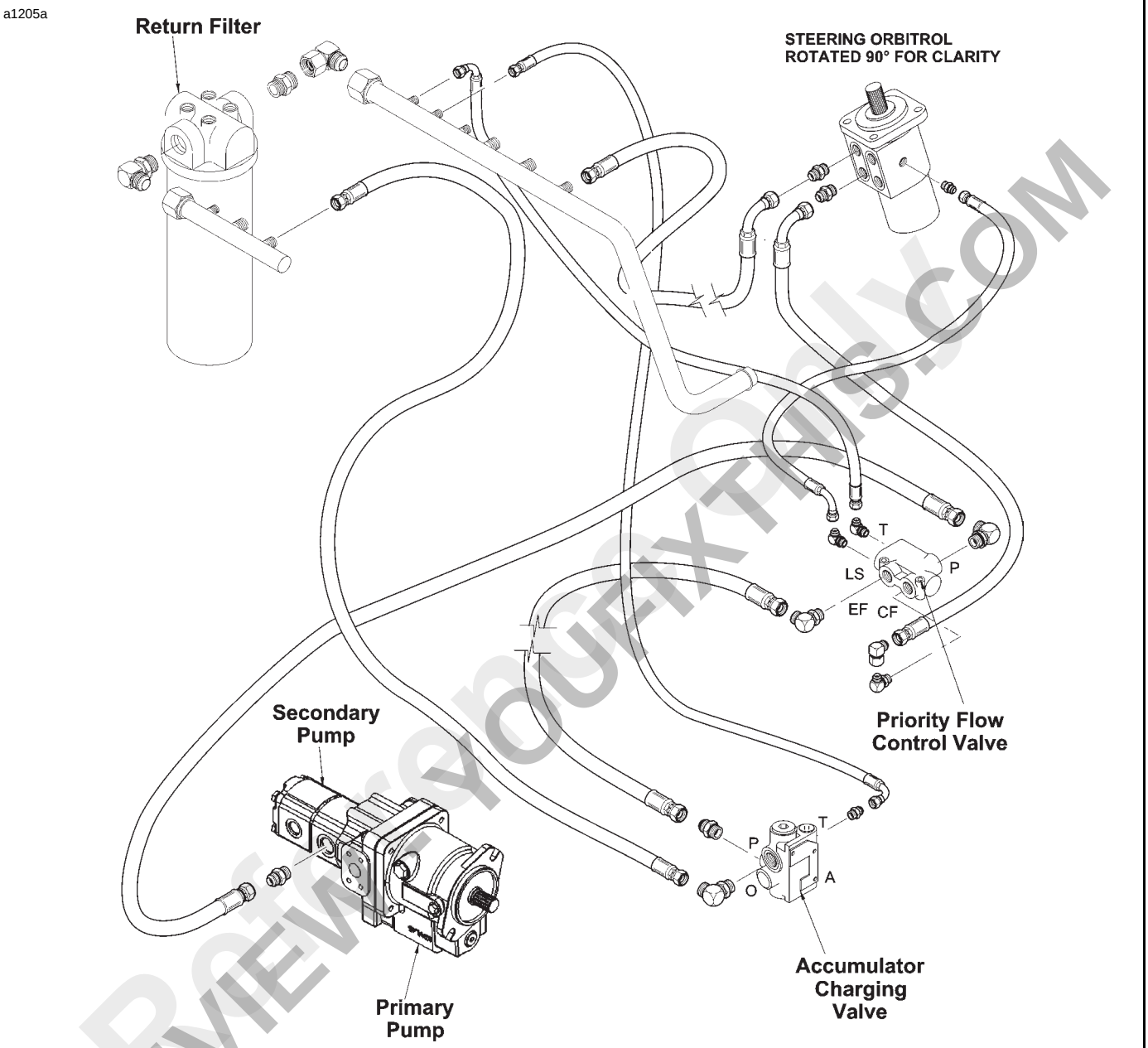

Secondary System Pump Pressure and Return Circuit (Steering and Brake)

FIGURE 4-13

PREVIEW ONLY Reference YOUFIXTHIS.COM

Download full manual at youfixthis.com

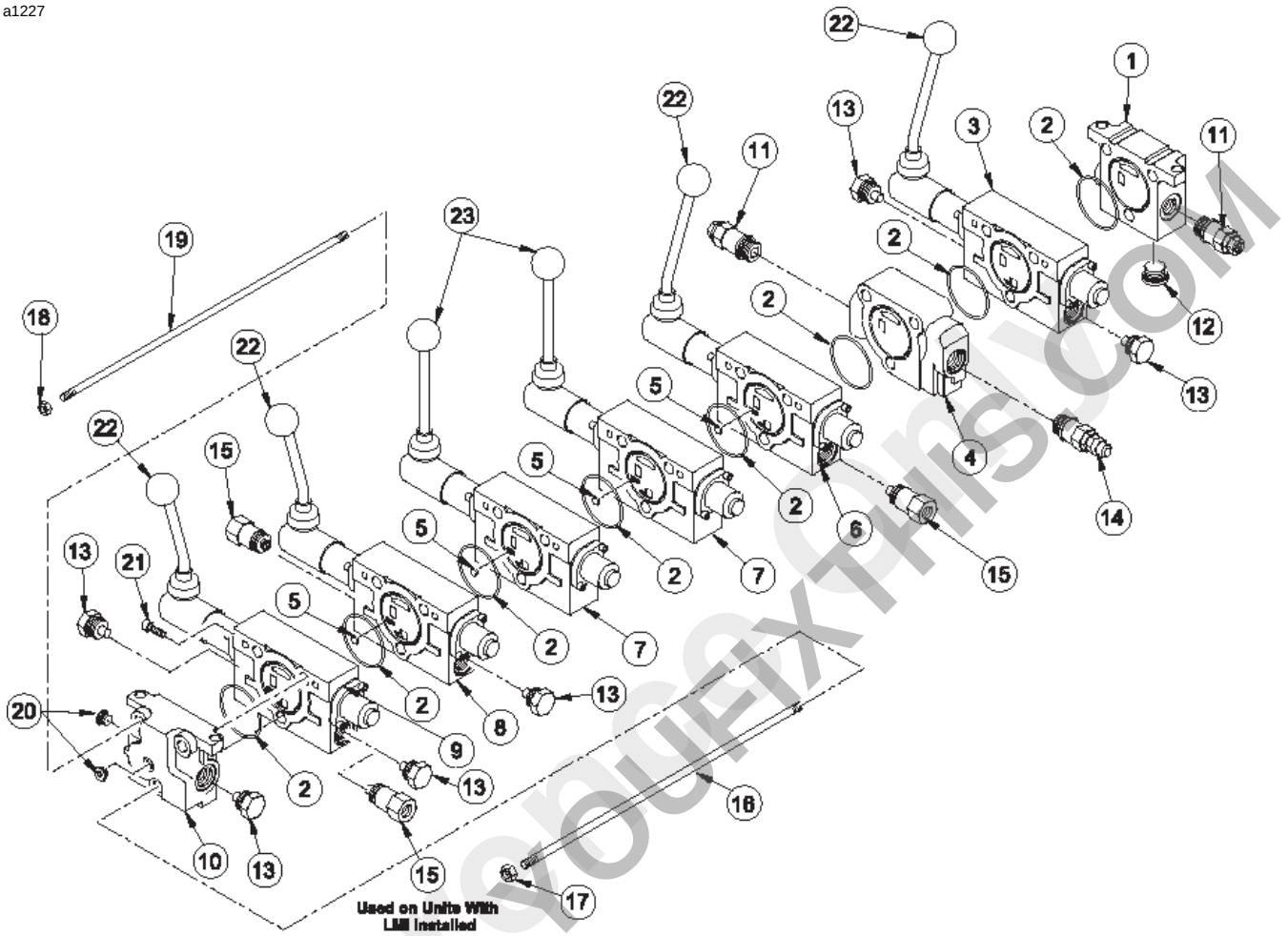

FIGURE 4-55

Item	Description	Item	Description
1	Inlet Valve Section	13	Shut-Off Plug (6)
2	O-ring (8)	14	Load Sensing Relief Valve
3	Working Valve Section (Swing)	15	Anti-Void Assembly (2 Std - 3 w/ RCL)
4	Mid-Inlet Valve Section	16	Tie Rod
5	Load Sense Shuttle Disc (4 Std - 6 w/ RCL)	17	Nut (2)
6	Working Valve Section (Telescope)	18	Nut (4
7	Working Valve Section (Outrigger	19	Tie Rod (2)
8	Working Valve Section (Hoist)	20	Plug (2)
9	Working Valve Section (Lift)	21	Hex Socket Capscrew (12)
10	Outlet Valve Section	22	Handle Assembly (4)
11	Main and Port Relief Valves	23	Handle Assembly (2)
12	Plug		

PREVIEW - YOUFIXTHIS.COM

Download full manual at youfixthis.com

Table 1-3: Metric Fasteners, Coarse Thread, Zinc-Flake Coating

Bolt Diameter - Metric Torque Values (Nm)																
Class	**M4**	**M5**	**M6**	**M8**	**M10**	**M12**	**M14**	**M16**	**M18**	**M20**	**M22**	**M24**	**M27**	**M30**	**M33**	**M36**
8.8	2.6	5.2	9.0	21.6	42.4	73.1	116	178	250	349	467	600	877	1195	1608	2072
10.9	3.7	7.5	12.5	31.5	62.0	110	170	265	365	520	700	900	1325	1800	2450	3150
12.9	4.3	9.0	15.0	36.0	75.0	128	205	315	435	615	830	1060	1550	2125	2850	3700

Table 1-4: Metric Fasteners, Coarse Thread, Untreated

Bolt Diameter - Metric Torque Values (Nm, Maximum/Minimum)															
Class	**M4**	**M5**	**M6**	**M7**	**M8**	**M10**	**M12**	**M14**	**M16**	**M18**	**M20**	**M22**	**M24**	**M27**	**M30**
8.8	3.1	6.5	11	19	27	53	93	148	230	319	447	608	774	1134	1538
	2.8	5.9	10	17	25	49	85	136	212	294	413	562	714	1046	1420
10.9	4.5	9.2	16	26	38	75	130	212	322	455	629	856	1089	1591	2163
	4.1	8.5	14	24	35	69	120	195	298	418	581	790	1005	1469	1997
12.9	5.4	11	19	31	45	89	156	248	387	532	756	1029	1306	1910	2595
	4.9	10	17	28	42	83	144	228	357	490	698	949	1206	1763	2395

Table 1-5: Metric Fasteners, Fine Thread, Zinc-Flake Coating

Bolt Diameter - Metric Torque Values (Nm)													
Class	**M8x1**	**M10x1**	**M10x1.25**	**M12x1.5**	**M14x1.5**	**M16x1.5**	**M18x1.5**	**M20x1.5**	**M22x1.5**	**M24x2**	**M27x2**	**M30x2**	**M33x2**	**M36x3**
8.8	23	46	44	75	123	185	270	374	496	635	922	1279	1707	2299
10.9	34	71	66	113	188	285	415	575	770	980	1425	2025	2500	3590
12.9	41	84	79	135	220	335	485	675	900	1145	1675	2375	2900	4200

Table 1-6: Metric Fasteners, Fine Thread, Untreated

Bolt Diameter - Metric Torque Values (Nm, Maximum/Minimum)														
Class	**M8x1**	**M10x1**	**M10x1.25**	**M12x1.5**	**M14x1.5**	**M16x1.5**	**M18x1.5**	**M20x1.5**	**M22x1.5**	**M24x2**	**M27x2**	**M30x2**	**M33x2**	**M36x3**
8.8	29	57	57	100	160	248	345	483	657	836	1225	1661	—	—
	27	53	53	92	147	229	318	446	607	771	1130	1534	—	—
10.9	41	81	81	1140	229	348	491	679	924	1176	1718	2336	—	—
	38	75	75	130	211	322	451	627	853	1085	1587	2157	—	—
12.9	49	96	96	168	268	418	575	816	1111	1410	2063	2800	—	—
	45	90	90	156	246	386	529	754	1025	1302	1904	2590	—	—

PREVIEW - youfixthis.com

Download full manual at youfixthis.com

GENERAL SERVICE INFORMATION

Appropriate service methods and proper repair procedures are essential for safe, reliable operation of the crane and safety of the individual doing the work. This Service Manual provides general directions for accomplishing service and repair with effective techniques. Following them will assure reliability.

There are many variations in procedures, techniques, tools and parts for servicing machines as well as work skills. This manual cannot possibly anticipate all such variations and provide advice or cautions for each one. Accordingly, anyone who intends to depart from the instructions in this manual must first consider personal safety and the crane's integrity.

CLEANING INSTRUCTIONS

Complete Assemblies

Before removal or disassembly, clean the outside of the component as necessary. Steam can be used if all openings are closed to prevent water from entering the component.

Parts with Machined Surfaces

Gears, bearings, shafts, or other parts which have machined surfaces can be cleaned with a solvent that is not flammable. DO NOT clean these parts in hot solution tanks or with warm water and alkaline solutions (for example; hydroxide, othosilicates and phosphates).

WARNING

To prevent injury from burns, always use a solvent that is not flammable for cleaning component parts. DO NOT use gasoline or other flammable substances.

Rough Parts

Housings and case parts can be cleaned in hot solution tanks with a mild alkali if these parts do not have machined surfaces. Keep the parts in the solution long enough to be thoroughly cleaned and heated. Flush the parts thoroughly after cleaning to remove all residue of the alkali solution.

Rubber Parts

Use brake fluid to clean rubber parts. To inhibit damage to the part, do not use mineral base solvents (for example; acetone or paint thinner).

NOTE: Use brake fluid to clean rubber parts. Acetone, paint thinner or other mineral base solvents must not be used on rubber parts. Mineral base solvents will cause damage and possible failure of the part.

After Cleaning

Remove all water or solvent from the parts immediately after cleaning. Use compressed air or a clean cloth. Make sure the parts are completely dry and clean. DO NOT use compressed air on bearings. Spinning bearings without lubricant will cause damage to the bearing.

CAUTION

When using compressed air use only low air pressure and keep air stream from direction of face. Injury to eyes could occur.

To Prevent Corrosion

Apply a light weight oil to those parts which normally use lubrication and are assembled immediately. If the parts will be put into storage for any length of time, apply a rust preventative lubricant and put a protective paper on the parts.

PREVIEW ONLY YOUFIXTHIS.COM

Download full manual at youfixthis.com

Problem	Possible Cause	Solution
Alternator Noise	**1.** Badly worn belt	**1.** Replace belt and adjust.
	2. Pulleys out of alignment.	**2.** Align fan and alternator pulleys.
	3. Loose pulley.	**3.** Check for broken key or worn keyway, if used.Tighten pulley nut.
	4. Worn bearings.	**4.** Replace or repair alternator.
	5. Short in rectifier diodes.	**5.** Replace or repair alternator.
Starter motor does not turn	**1.** Open circuit, dirty or loose connections.	**1.** Clean and tighten connections at battery and starter. Check wiring and connections between ignition switch and starter solenoid.
	2. Bad starter relay.	**2.** Replace starter relay.
	3. Bad ignition switch.	**3.** Replace switch.
	4. Worn starter motor, bad starter solenoid, or internal problem in engine.	**4.** Repair or replace starter, replace solenoid, or see engine manual.
	5. Dead battery.	**5.** Recharge or replace battery.
	6. Parking brake not engaged.	**6.** Engage parking brake.
	7. Bad neutral start relay.	**7.** Replace relay.
Winch motor runs in only one direction	**1.** Defective solenoid or stuck solenoid.	**1.** Jar solenoid to free contacts. Check by applying 12 volts to coil terminal (should hear an audible click when energized). Replace solenoid.
	2. Defective control switch.	**2.** Check and replace if necessary.
Winch motor runs extremely hot	**1.** Long period of operation.	**1.** Cooling-off periods are essential to prevent overheating.
	2. Insufficient battery power.	**2.** Check battery terminal voltage under load. If 10 volts or less, replace the battery.
	3. Bad connection.	**3.** Check battery cables for corrosion, clean and grease
Winch motor runs but with insufficient power, or with slow line speed.	**1.** Insufficient battery power.	**1.** Check battery terminal voltage under load. If 10 volts or less, replace the battery.
	2. Bad connection.	**2.** Check battery cables for corrosion, clean and grease.
Winch motor runs but drum does not rotate	**1.** Clutch not engaged.	**1.** Engage clutch.
	2. Clutch engaged.	**2.** Disassemble the winch to determine cause and repair.

PREVIEW - YOUFIXTHIS.COM

GROVE Published 1-19-2017, Control # 464-03 3-13

Download full manual at youfixthis.com

WIRE ROPE

Wire Rope (Main Hoist):

- Diameter ..... 13 mm
- Type ..... 8x25 Galv.
- Length:
  - Short Boom ..... 24.4 m (80 ft)
  - Long Boom ..... 39.6 m (130 ft)

Wire Rope (Optional Below Deck Winch):

- Diameter ..... 6 mm (1/4 in)
- Length ..... 30.5 m (100 ft)

TORQUE CONVERTER

Model ..... Borg and Beck
Type ..... Hydraulic

TRANSMISSION

- Type ..... International Transmissions Limited
- Model SS620
- Type ..... Synchroshuttle
- Travel Speed:
  - First ..... 7.44 km/h (4.62 mph)
  - Second ..... 11.68 km/h (7.26 mph)
  - Third ..... 21.48 km/h (13.35 mph)
  - Fourth ..... 35.65 km/h (22.15 mph)

FRONT AXLE, DRIVE/STEER

Type ..... Carraro
Model 26.18M-164
Ratio 10.66:1

PREVIEW - YOUFIXTHIS.COM Reference Only

Download full manual at youfixthis.com

SERVICE/CHECK	*INTERVAL (Whichever Occurs First							See Page
	Daily Before Operation	**50 Hours** Weekly	**100 Hours** Two Weeks	**250 Hours** Monthly	**500 Hours** Three Months	**1000 Hours** Six Months	**2000 Hours** Yearly	
Inspect Tires for Damage					X			5-26
Add Rust Inhibitor to Engine Cooling System					X			5-26
Replace the Air Cleaner Element**					X			5-26
Clean and Adjust Spark Plug Gap					X			5-26
Lubricate the Wheel Bearings (Rear Axle)						X		5-28
Check Swing Gear to Pinion Backlash						X		5-34
Change the Transmission Oil and Filter						X		5-29
Replace the Axle Wheel Hub Lubricant (2)						X		5-31
Replace the Axle Housing Lubricant (1)						X		5-30
Replace the Hoist Gearbox Lubricant						X		5-32
Replace the Hydraulic Oil						X		5-32
Replace the Hydraulic Oil Filter						X		5-34
Replace the Engine Coolant							X	5-35
Inspect the Crane Structure and Booms for Damage							X	5-35
Test the Optional Rated Capacity Limiter (RCL)							X	5-35

* Maintenance should be performed using either the hourly or calendar dates, whichever occurs first.

** Under extremely dusty conditions, the engine oil, oil filter and air cleaner element may require replacement more frequently.

5

PREVIEW - YOUFIXTHIS.COM Reference Only

Download full manual at youfixthis.com

THIS PAGE BLANK

PREVIEW - YOUFIXTHIS.COM
Reference Only

Download full manual at youfixthis.com

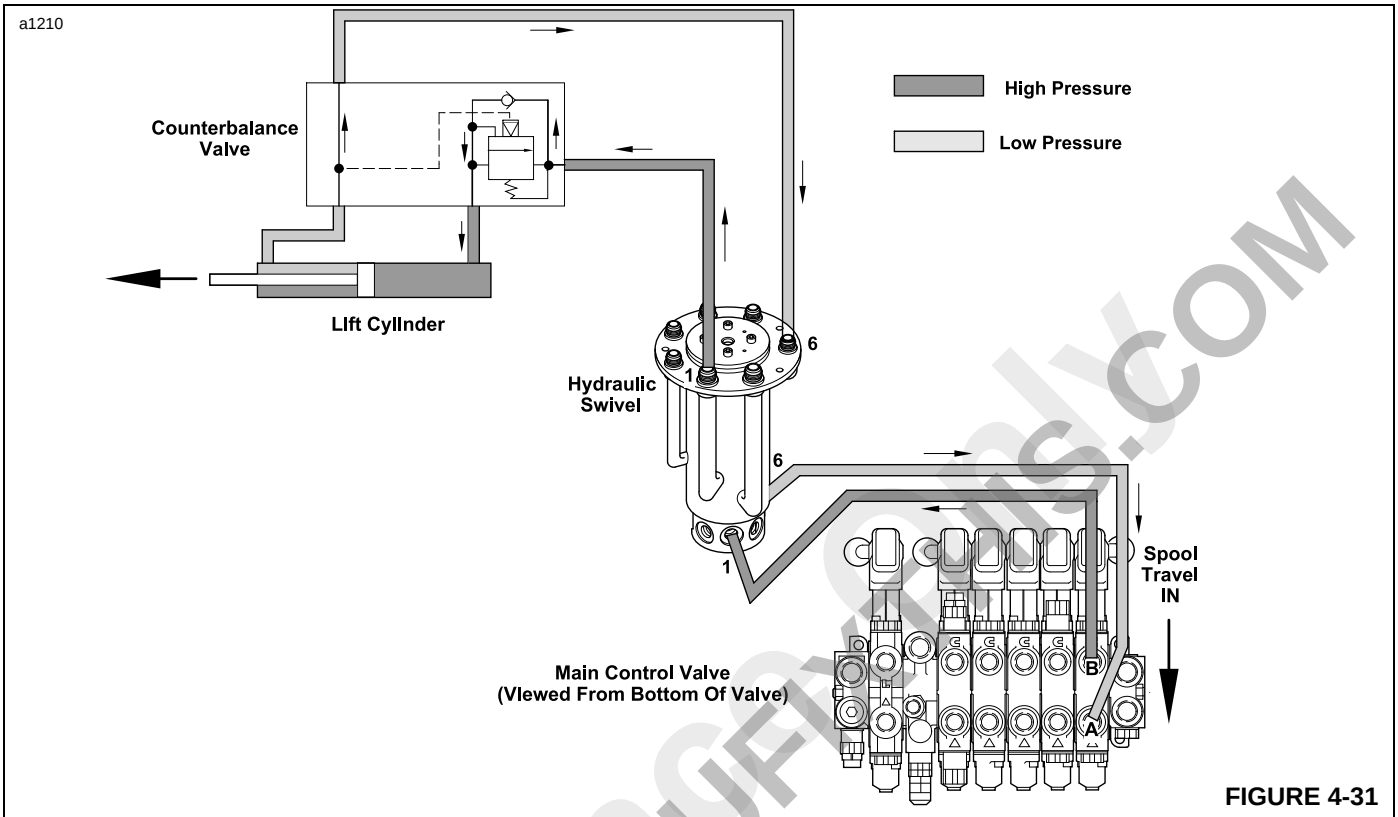

FIGURE 4-31

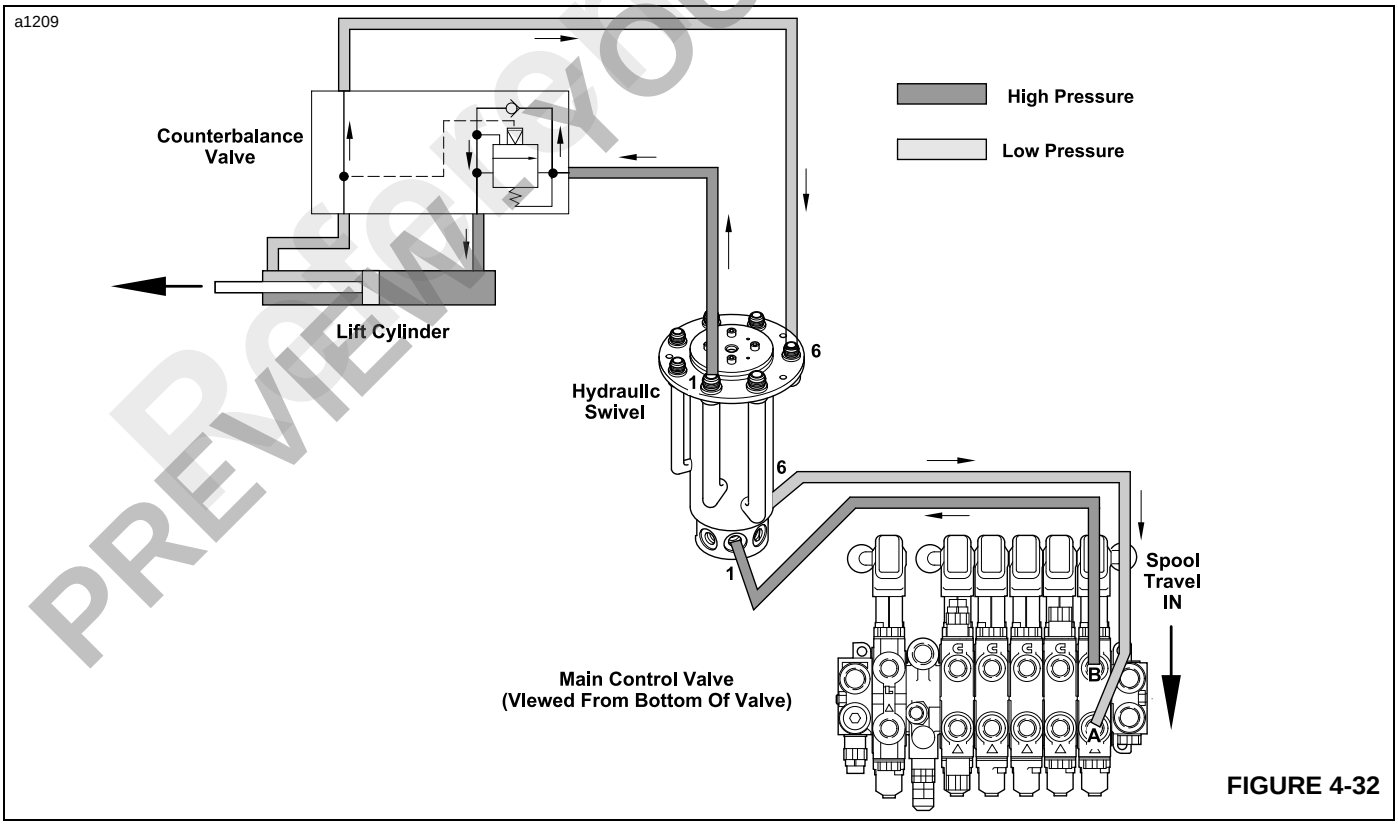

FIGURE 4-32

PREVIEW ONLY

Download full manual at youfixthis.com

PREVIEW ONLY

You're viewing 18 of 308 pages

The full manual includes:

- All 308 pages, complete
- Searchable PDF (find any keyword)
- No watermarks
- Instant download
- Print-ready quality

GET FULL MANUAL NOW

Grove CD3330F, CD3330FL, YB4409, YB4409XL Service Manual

Scan or click anywhere
youfixthis.com

Click anywhere on this page to get the full manual