F-656 TRACTOR
w/Alternator (Diesel)

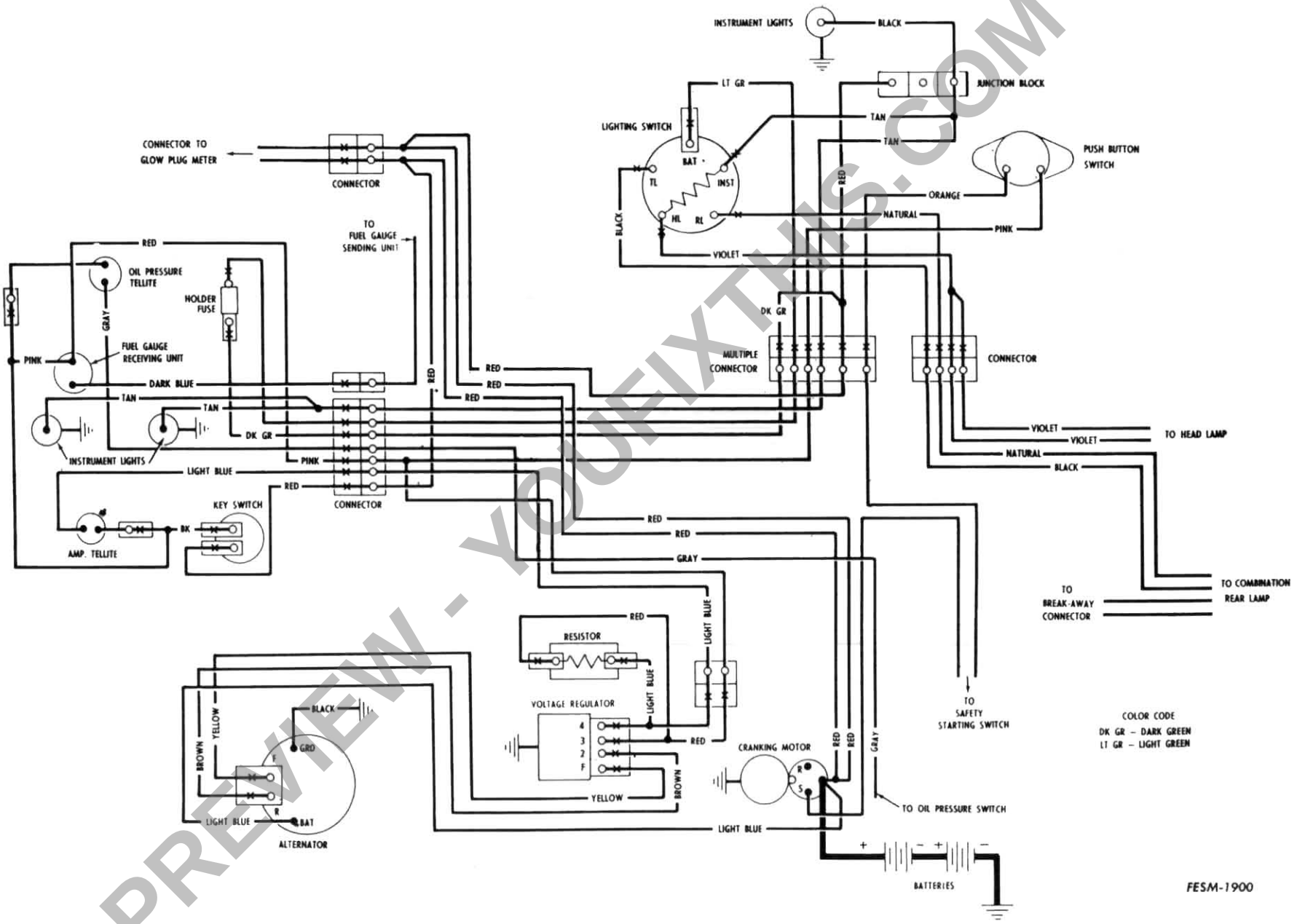

PREVIEW - YOUFIXTHIS.COM

Download full manual at youfixthis.com

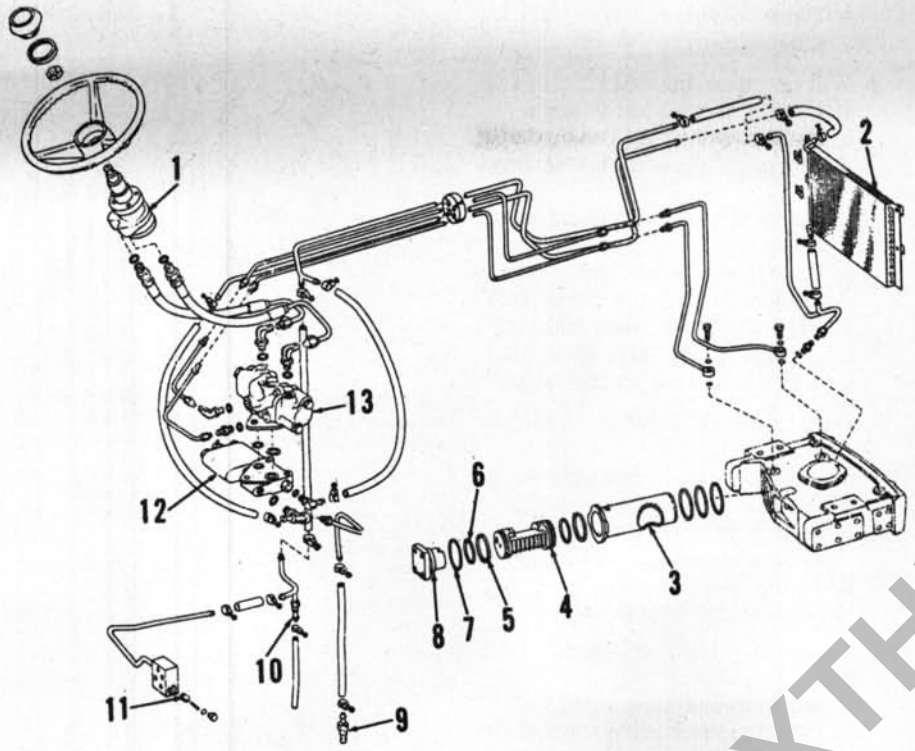

1. Hand pump
2. Oil cooler
3. Cylinder sleeve
4. Piston
5. Piston ring
6. "O" ring
7. "O" ring
8. End cover
9. By-pass valve
10. Return orifice
11. Check valve
12. Flow divider valve
13. Control (pilot) valve

Fig. 9—Schematic view showing general layout of component parts comprising power steering system on Farmall tractors equipped with standard transmission.

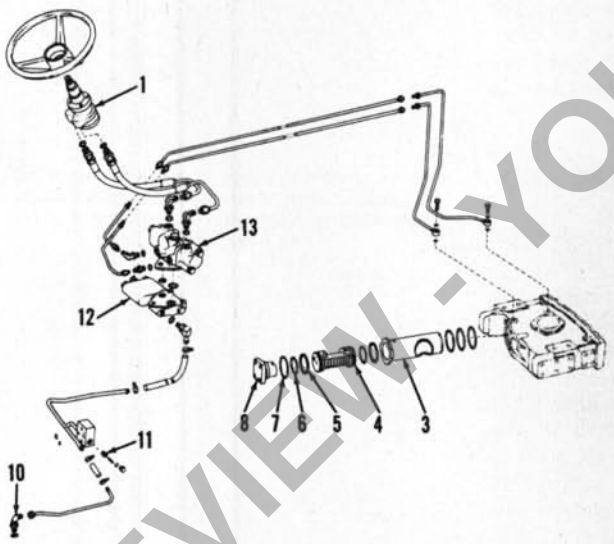

Fig. 10—Schematic view showing general layout of component parts of power steering system on hydrostatic drive equipped Farmall tractors.

1. Hand pump
3. Cylinder sleeve
4. Piston
5. Piston ring
6. "O" ring
7. "O" ring
8. End cap
10. Return orifice
11. Check valve
12. Flow divider valve
13. Control (pilot) valve

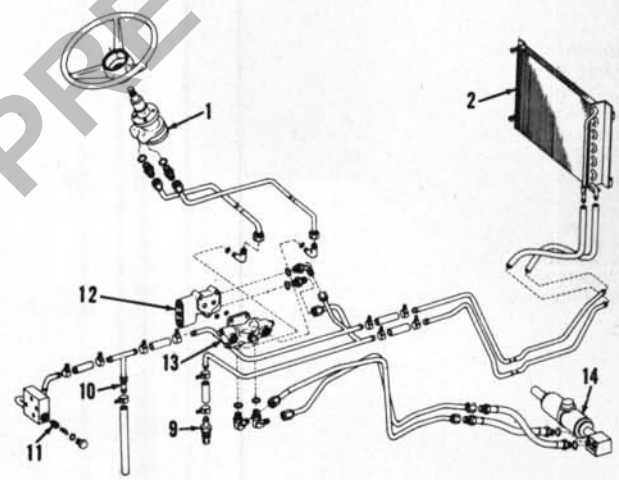

Fig. 11—Schematic view showing general layout of component parts of power steering system on International 544 and 656 tractors equipped with standard transmission.

1. Hand pump
2. Oil cooler
9. By-pass valve
10. Return orifice
11. Check valve
12. Flow divider valve
13. Control (pilot) valve
14. Steering cylinder

stopped). The balance goes to the lower port on the load control junction block and lubricates the differential and bull pinion bearings. A check valve in this junction block closes off the suction during manual steering. When power steering is in use, fluid returning from the steering cylinder goes through the steering control valve, then follows the route described above. The oil cooler by-pass valve (90 psi) is located in right side of clutch housing top cover. This valve allows cold fluid to by-pass the cooler for a quick warm-up of fluid and provides a relief should the cooler become restricted.

The balance of the fluid pumped to the flow divider valve goes to the junction block on right side of the load control. This is the supply for auxiliary valves.

On Farmall and International tractors equipped with hydrostatic drive, the power steering fluid supply circuit differs in some respects from the standard transmission tractors. Oil cooler and oil cooler by-pass valve are not connected to the steering system. The power steering relief valve oil is ported internally in the flow divider valve into the return oil circuit. A small amount of this oil flows through the return orifice located in the right rear corner of the draft control housing. This also supplies makeup oil for manual steering. The balance of the return oil goes to the lower port on the load control junction block and lubricates the differential and bull pinion bearings. The check valve in the junction block closes off the suction during manual steering. The balance of the steering and auxiliary circuits are similar to standard transmission tractors.

LUBRICATION AND BLEEDING

All Models

12. The tractor rear frame serves as a common reservoir for all hydraulic and lubrication operations. The filter element, shown in Fig. 13 or 14, should be renewed at 10 hours, 100 hours, 250 hours and then every 250 hours of operation thereafter. Hydraulic fluid should be drained and new fluid added every 1000 hours, or once a year, whichever occurs first.

Only IH "Hy-Tran" fluid should be used and level should be maintained at

PREVIEW - YOUFIXTHIS.COM

Download full manual at youfixthis.com

Thompson 17 GPM

O.D. of shafts at bearings (minimum)	0.811
I.D. of bearings in body and cover (maximum)	0.816
Thickness (width) of gears (minimum)	1.071
I.D. of gear pockets (maximum)	1.775
O.D. of gear (minimum)	1.7675
Max. allowable shaft to bearing clearance	0.005

Lubricate all parts during assembly, renew all gaskets and seals and be sure bearings (7) are installed in their original positions if same bearings are being reinstalled. Wear plate (14) is installed with bronze side towards gears and with reliefs towards pressure side of pump. When installing pressure spring (6), position spring so that tangs are against bearings. Gasket and "O" ring service package (IH part number 371549R93) is available for Thompson pumps. Cover cap screws should be tightened to a torque of 25-35 ft.-lbs.

After pump has been assembled and drive gear installed, check pump shaft rotation. Pump should have a slight amount of drag but should rotate evenly.

HAND PUMP

Farmall Models

27. **REMOVE AND REINSTALL.** To remove the power steering hand pump, first remove cap (monogram) from steering wheel, remove nut, attach puller and remove steering wheel.

NOTE: DO NOT drive on steering wheel or shaft to remove steering wheel or damage to hand pump could occur.

Remove the small plate just below steering wheel on rear side of steering support. Disconnect hydraulic lines from hand pump and plug openings to prevent dirt from entering system. Remove button plug from throttle lever, then remove nut, washer and throttle lever from throttle shaft. Remove the three nuts securing throttle shaft bracket to bottom of hand pump. Unbolt support cover and lift cover and hand pump from steering support. Separate hand pump from support cover.

Reinstall by reversing the removal procedure and bleed steering system as outlined in paragraph 12.

International 544-686

28. **REMOVE AND REINSTALL.** To remove the power steering hand pump, remove hood, retaining nut and steering wheel. Use a puller to remove steering wheel.

NOTE: DO NOT drive on steering wheel or shaft as damage to hand pump could occur.

Unbolt instrument panel from instrument panel housing (cowl) and remove housing. Disconnect lines from hand pump, then unbolt and remove hand pump from steering support.

Reinstall by reversing the removal procedure and bleed steering system as outlined in paragraph 12.

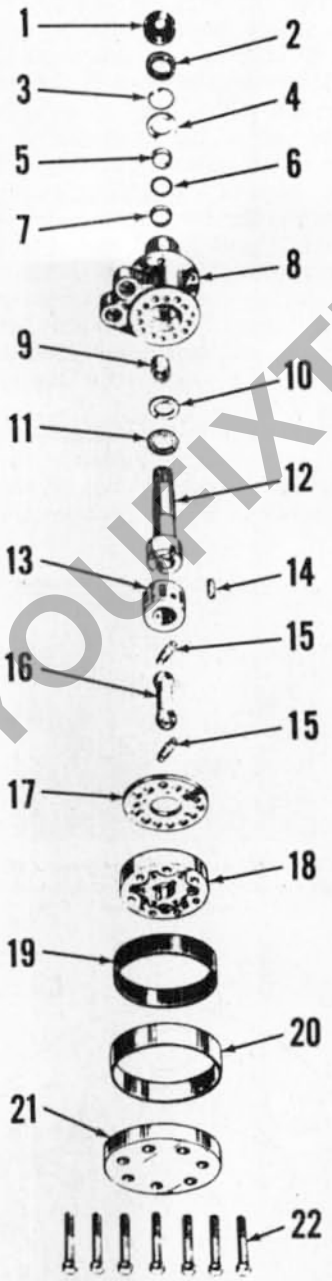

Fig. 19—Exploded view of power steering hand pump.

1. Dirt shield
2. Felt seal
3. Retaining ring
4. Washer
5. Nylon spacer
6. Back-up ring
7. Seal
8. Body
9. Needle bearing
10. Bearing race
11. Thrust bearing
12. Shaft
13. Commutator
14. Commutator pin
15. Link pins
16. Rotor drive link
17. Spacer plate
18. Stator-Rotor set
19. Seal
20. Seal retainer
21. End plate
22. Cap screws

All Models

29. **OVERHAUL MANUAL (HAND) PUMP.** With manual pump removed as outlined in paragraph 27 or 28, place the unit in a soft jawed vise with end plate on top side. Remove cap screws (22—Fig. 19) and lift off end plate (21).

NOTE: Lapped surfaces of end plate (21), pumping element (18), spacer (17), commutator (13) and pump body (8) must be protected from scratching, burring or any other damage as sealing of these parts depends only on their finish and flatness.

Remove seal retainer (20), seal (19), pumping element (18) and spacer (17) from body (8). Remove commutator (13) and drive link (16), with link pins (15) and commutator pin (14). Smooth any burrs which may be present on input shaft (12), wrap spline with masking tape, then remove input shaft from body. Remove bearing race (10) and thrust bearing (11) from input shaft. Remove retaining ring (3), washer (4), spacer (5), back-up washer (6) and seal (7). Do not remove needle bearing (9) unless renewal is required. If it should be necessary to renew bearing, press same out pumping element end of body.

Clean all parts in a suitable solvent and if necessary, remove paint from outer edges of body, spacer and end plate by passing these parts lightly over crocus cloth placed on a perfectly flat surface. Do not attempt to dress out any scratches or other defects since these sealing surfaces are lapped to within 0.0002 of being flat.

Inspect commutator and housing for scoring undue wear. Bear in mind that burnish marks may show, or discolorations from oil residue may be present on commutator after unit has been in service for some time. These can be ignored providing they do not interfere with free rotation of commutator in body.

Check fit of commutator pin on commutator. Pin should be a snug fit and if bent, or worn until diameter at contacting points is less than 0.2485, renew pin.

Measure inside diameter of input shaft bore in body and outside diameter of input shaft bearing surface. If body bore is 0.006, or more, larger than shaft diameter, renew shaft and/or body and commutator.

PREVIEW - YOUFIXTHIS.COM
Download full manual at youfixthis.com

CONDENSED SERVICE DATA CONT.

	544 Non-Diesel	544 Diesel	656 Non-Diesel	656 Diesel
TUNE-UP				
Compression Pressure				
Except LP-Gas	155(1)	313-341(1)	155(1)	350-400(1)
LP-Gas	....	....	205(1)	....
Firing Order	1-3-4-2	1-3-4-2	1-5-3-6-2-4	1-5-3-6-2-4
Valve Tappet Gap (Hot) Intake	0.027	0.010	0.027	0.027
Valve Tappet Gap (Hot) Exhaust	0.027	0.012	0.027	0.027
Inlet Valve Seat Angle	30°	45°	30°	45°
Exhaust Valve Seat Angle	30°	45°	30°	45°
Ignition Distributor Make	Delco-Remy	....	IH(2)	....
Breaker Gap	0.020	....	0.020	....
Distributor Timing	See Para. 224	....	See Para. 224	....
Timing Mark Location	Crankshaft Pulley		Crankshaft Pulley	
Spark Plug Electrode Gap Gasoline	0.023	....	0.023	....
LP-Gas	....	....	0.015	....
Carburetor Make, LP-Gas	....	....	Ensign	....
Carburetor Make, Gasoline	M-S or IH	....	M-S or IH	....
Injection Pump Make	....	Robert Bosch	....	Roosa-Master
Injection Pump Timing	....	14° BTDC	....	See Para. 183
Battery Terminal, Grounded	Negative		Negative	
Engine Low Idle rpm	425	700	425	650
Engine High Idle rpm, No Load				
With Standard Transmission	2420	2420	2050	2050
With Hydrostatic Drive	2650	2640	2580	2580
Engine Full Load rpm				
With Standard Transmission	2200	2200	1800	1800
With Hydrostatic Drive	2400	2400	2300	2300

(1) Approximate psi, at sea level, at cranking speed. (2) Delco-Remy, if equipped with magnetic pulse ignition.

SIZES—CAPACITIES—CLEARANCES				
Crankshaft Main Journal Diameter	2.7485	3.1484-3.1492	2.7485	2.7485
Crankpin Diameter	2.3735	2.5185-2.5193	2.3735	2.3735
Camshaft Journal Diameter, Front	2.0895	2.2823-2.2835	2.1095	2.1095
Camshaft Journal Diameter, No. 2	2.0695	2.2823-2.2835	2.0895	2.0895
Camshaft Journal Diameter, No. 3	1.500	2.2823-2.2835	2.0695	2.0695
Camshaft Journal Diameter, No. 4	....	2.2823-2.2835	1.500	1.500
Camshaft Journal Diameter, No. 5	....	2.2823-2.2835	....	....
Piston Pin Diameter	0.87485	1.41725	0.87485	1.1248
Valve Stem Diameter, Intake	0.372	0.3921	0.372	0.372
Exhaust	0.3715	0.3913	0.3715	0.372
Main Bearing Diametral Clearance	0.0012-0.0042	0.0029-0.0055	0.0012-0.0042	0.0012-0.0042
Rod Bearing Diametral Clearance	0.0009-0.0034	0.0023-0.0048	0.0009-0.0034	0.0009-0.0034
Piston Skirt Diametral Clearance	0.001-0.0045	0.0039-0.0047	0.001-0.0045	0.005-0.0076
Crankshaft End Play	0.005-0.010	0.006-0.009	0.005-0.013	0.005-0.013
Camshaft Bearings				
Diametral Clearance	0.0005-0.005	0.0009-0.0033	0.0005-0.005	0.0005-0.005
Camshaft End Play	0.002-0.010	0.004-0.018	0.002-0.010	0.002-0.010
Cooling System Capacity—Quarts	14	15	20½	21½
Crankcase Oil, Quarts	7	10	9	9
Transmission and Differential—Gallons				
Standard Transmission				
Farmall	16	16	16	16
International	13	13	16	16
Hydrostatic Drive				
Farmall	20	20	20	20
International	17	17	20	20

PREVIEW - YOUFIXTHIS.COM

Download full manual at youfixthis.com

the "FULL" mark shown on level gage (dip stick). The dip stick is located on top left front of rear frame.

Whenever power steering lines have been disconnected, or fluid changed, start engine and cycle power steering system from stop to stop several times to bleed air from system. Then, check and, if necessary, add fluid.

NOTE: On hydrostatic drive models, operate engine with range selector and speed ratio controls in neutral position until engine is at operating temperature. Then, with engine operating at 1200 rpm, check fluid level which should be at "FULL" mark. Fluid level will register 1½ inches higher if engine is not operating while checking the level.

TROUBLE SHOOTING

All Models

13. The following table lists some of the troubles which may occur in the operation of the power steering system. When the following information is used in conjunction with information in the Power Steering Operational Tests section (paragraphs 15 through 22), no trouble should be encountered in locating system malfunctions.

1. No power steering or steers slowly.
   a. Binding in mechanical linkage.
   b. Excessive load on front wheels and/or air pressure low in front tires.
   c. Steering cylinder piston seal rings faulty or cylinder damaged.
   d. Faulty commutator in hand pump.
   e. Flow divider valve spool sticking or leaking excessively.
   f. Control (pilot) valve spool sticking or leaking excessively.
   g. Circulating check ball not seating.
   h. Flow divider valve orifice plugged.
2. Will not steer manually.
   a. Binding mechanical linkage.
   b. Excessive load on front wheels and/or air pressure low in front tires.
   c. Pumping element in hand pump faulty.
   d. Faulty seal rings in steering cylinder or cylinder damaged.
   e. Pressure check valve leaking.
   f. Control (pilot) valve spool binding or centering spring broken.
3. Hard steering through complete cycle.
   a. Low pressure from supply pump.
   b. Internal or external leakage.
   c. Line between hand pump and control (pilot) valve obstructed.
   d. Faulty steering cylinder.
   e. Binding mechanical linkage.
4. Momentary hard or lumpy steering.
   a. Air in power steering circuit.
   b. Control (pilot) valve spool sticking.
5. Shimmy.
   a. Control (pilot) valve spool centering spring weak or broken.
   b. Control (pilot) valve spool centering spring washers bent or broken.

OPERATING PRESSURE AND RELIEF VALVE

All Models

14. Power steering operating pressure is regulated by a relief valve in the flow divider block. To check the operating pressure, disconnect a control valve to steering cylinder line. Then, using a tee connector, install a gage capable of registering at least 3000 psi in this circuit. Start engine and operate until hydraulic fluid is warm. Run

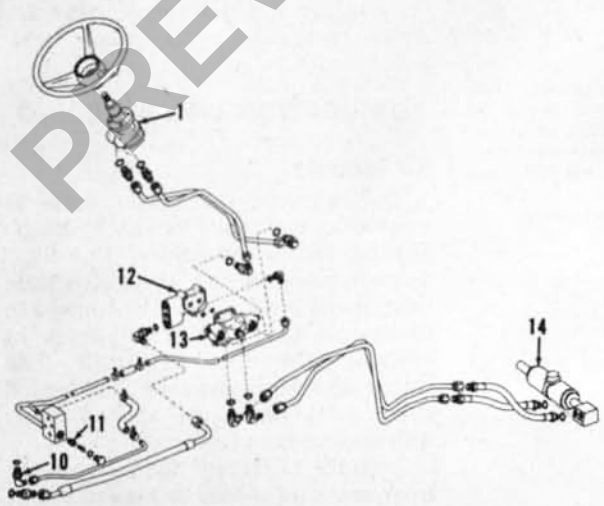

Fig. 12—Schematic view showing general layout of component parts of power steering system on hydrostatic drive equipped International 544 and 656 tractors.

1. Hand pump
10. Return orifice
11. Check valve
12. Flow divider valve
13. Control (pilot) valve
14. Steering cylinder

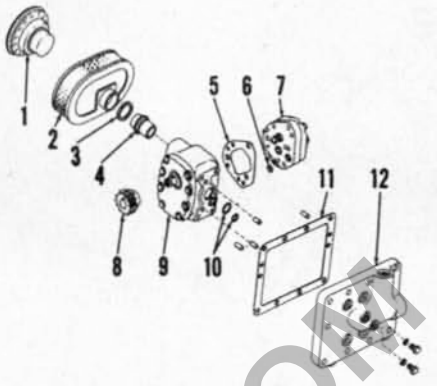

Fig. 13—Hydraulic pumps and filter used on standard transmission models. Filter is located in right side of clutch housing directly opposite pumps.

1. Filter by-pass valve
2. Filter element
3. Filter seal ring
4. Suction tube
5. Gasket
6. "O" ring
7. Hitch pump
8. Drive gear
9. Steering & auxiliary pump
10. "O" rings
11. Shim gasket
12. Pump mounting flange

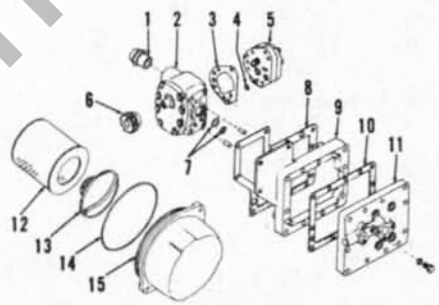

Fig. 14—Hydraulic pumps and filter used on hydrostatic drive models. Filter and pumps are located in right side of hydrostatic drive housing.

1. Suction tube
2. Steering & auxiliary pump
3. Gasket
4. "O" ring
5. Hitch pump
6. Drive gear
7. "O" rings
8. Gasket
9. Adapter plate
10. Shim gasket
11. Pump mounting flange
12. Filter element
13. Filter by-pass valve
14. "O" ring
15. Cover

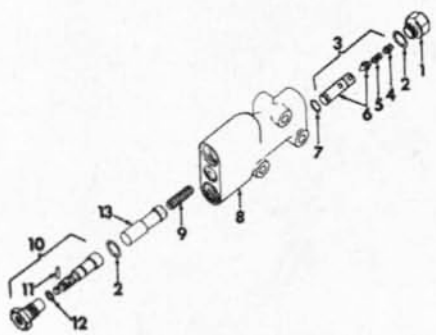

Fig. 15—Exploded view of flow divider valve used on models equipped with standard transmission. Items 4, 5 and 6 are available only as an assembly (3).

1. Relief valve stop
2. "O" ring
3. Relief valve assy.
4. Adjusting screw
5. Spring
6. Valve & seat
7. "O" ring
8. Valve body
9. Spring
10. Lock-out assembly
11. Roll pin
12. "O" ring
13. Spool

PREVIEW - YOUFIXTHIS.COM
Download full manual at youfixthis.com

pump, if tractor is so equipped, is bolted to and driven by the power steering pump. Refer to Figs. 13 and 14.

24. **REMOVE AND REINSTALL.** To remove the hydraulic pump (or pumps), remove bottom plug and drain clutch housing or hydrostatic drive housing. Disconnect the output lines from pump mounting flange, remove flange retaining cap screws and withdraw flange with pumps from housing.

NOTE: If tractor is not equipped with draft and position control, the power steering pump will be fitted with a cover in place of the hitch pump.

The draft and position control pump can be removed from the power steering pump after removing the four attaching cap screws. Take care to prevent damage to sealing surfaces when separating the pumps.

Remove the four cap screws securing power steering pump to mounting flange and separate pump from flange.

When reinstalling pumps use new "O" rings, gaskets and suction tube. See Figs. 13 and 14. The suction tube must be installed with lip of seal towards pump side of tractor. Vary the number and thickness of shim gaskets on pump mounting flange to provide a backlash of 0.004-0.028 between pump drive gear and pto gear. Shim gaskets are available in two thicknesses; 0.011-0.019 and 0.016-0.024.

25. **OVERHAUL (CESSNA).** To overhaul the removed pump, refer to Fig. 17 and proceed as follows: Remove the nut, drive gear and key from pump shaft, then unbolt and remove pump cover (2). Withdraw pump gear and shaft assemblies (10) and thrust plate (15) from pump body. Remove diaphragm, gaskets, seal, spring and check ball from cover. Then, remove shaft oil seal (1).

Bushings in pump body (12) and cover (2) are not available separately and the pump gears and shafts are available only in sets.

Pump specifications are as follows:

Cessna 12 GPM

O.D. of shafts at bushings (minimum)	0.810
I.D. of bushings in body and cover (maximum)	0.8161
Thickness (width) of gears (minimum)	0.571
I.D. of gear pockets (maximum)	2.002
O.D. of gears (minimum)	1.995
Max. allowable shaft to bushing clearance	0.006

Cessna 17 GPM

O.D. of shafts at bushings (minimum)	0.810
I.D. of bushings in body and cover (maximum)	0.8161
Thickness (width) of gears (minimum)	0.812
I.D. of gear pockets (maximum)	2.002
O.D. of gears (minimum)	1.995
Max. allowable shaft to bushing clearance	0.006

When reassembling, use new diaphragm, nylatron gasket, protector gasket, diaphragm seal, thrust plate and shaft seal. These parts are available as a service package (IH part number 373969R94). Using a dull tool, work the open "V" side of diaphragm seal (5) into grooves in cover (2). Press the protector gasket (6) and nylatron gasket (7) into the relief in diaphragm seal. Install check ball (3) and spring (4) in cover, then install diaphragm (8) with bronze side towards gears. Entire diaphragm must fit inside raised rim of diaphragm seal. Dip gear and shaft assemblies (10) in "Hy-Tran" fluid and install them in cover assembly. Position thrust plate (15) in pump body (12) with the bronze side towards gears and large cut-out on inlet side of pump. Install pump body over pump gears, then install cap screws and tighten to a torque of 40 ft.-lbs. Lubricate shaft seal (1) and carefully work seal over drive gear shaft. Seat the shaft seal by tapping with a plastic hammer. Install pump drive gear. Check the pump rotation. Pump should have a slight amount of drag but should rotate evenly.

26. **OVERHAUL (THOMPSON).** To overhaul the removed pump, refer to Fig. 18 and proceed as follows: Remove nut, pump drive gear and key, then unbolt and remove pump cover (2). Bearings (7), pressure spring (6), "O" ring retainers (5), "O" rings (4), back-up washers (3) and oil seal (1) can now be removed from cover. Note location of bearings (7) so they can be reinstalled in the same position. Remove pump gear and shaft assemblies (9 and 12), then remove wear plate (14) from pump body (15).

Pump gears and shafts, as well as shaft bearings, are available only in sets.

Pump specifications are as follows:

Thompson 12 GPM

O.D. of shafts at bearings (minimum)	0.811
I.D. of bearings in body and cover (maximum)	0.816
Thickness (width) of gears (minimum)	0.7765
I.D. of gear pockets (maximum)	1.775
O.D. of gears (minimum)	1.7675
Maximum allowable shaft to bearing clearance	0.005

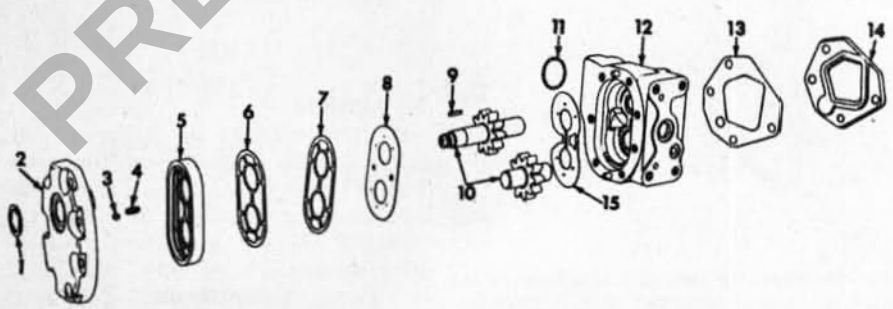

Fig. 17—Exploded view of Cessna 12 or 17 gpm hydraulic pump used for the power steering and auxiliary hydraulic system.

1. Oil seal
2. Pump cover
3. Check ball
4. Spring
5. Diaphragm seal
6. Protector gasket
7. Nylatron gasket
8. Diaphragm
9. Key
10. Pump gears & shafts
11. "O" ring
12. Pump body
13. Gasket
14. Rear cover
15. Thrust plate

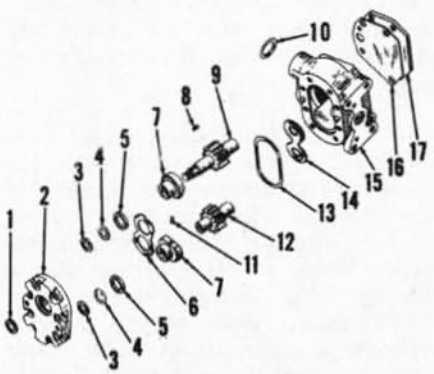

Fig. 18—Exploded view of Thompson 12 or 17 gpm hydraulic pump used for the power steering and auxiliary hydraulic system.

1. Oil seal
2. Pump cover
3. Back-up washer
4. "O" ring
5. Retainer
6. Pressure spring
7. Bearings
8. Key
9. Drive gear & shaft
10. "O" ring
11. Pin
12. Driven gear & shaft
13. Seal ring
14. Wear plate
15. Pump body
16. Gasket
17. Rear cover

PREVIEW YOUFIXTHIS.COM
Download full manual at youfixthis.com

FRONT SYSTEM TRICYCLE TYPE

Farmall tractors are available with either of the two single front wheels in Fig. 1, or may also be equipped with a dual wheel tricycle type shown in Fig. 2.

SINGLE WHEEL

All Farmall Models

1. The single front wheel is mounted in a fork which is bolted to the steering pivot shaft and depending on tire size, two wheel types are used. On tractors with 9.00x10 tires, the male and female wheel halves (18 and 19—Fig. 1) are used. On tractors with 7.50x16 tires, a solid disc type wheel (12) is used in conjunction with hub (11). In all cases taper roller wheel bearings are used.

Wheel bearings are adjusted to a slight preload with adjusting nut (14). Lock adjusting nut with jam nut (16) after adjustment is complete.

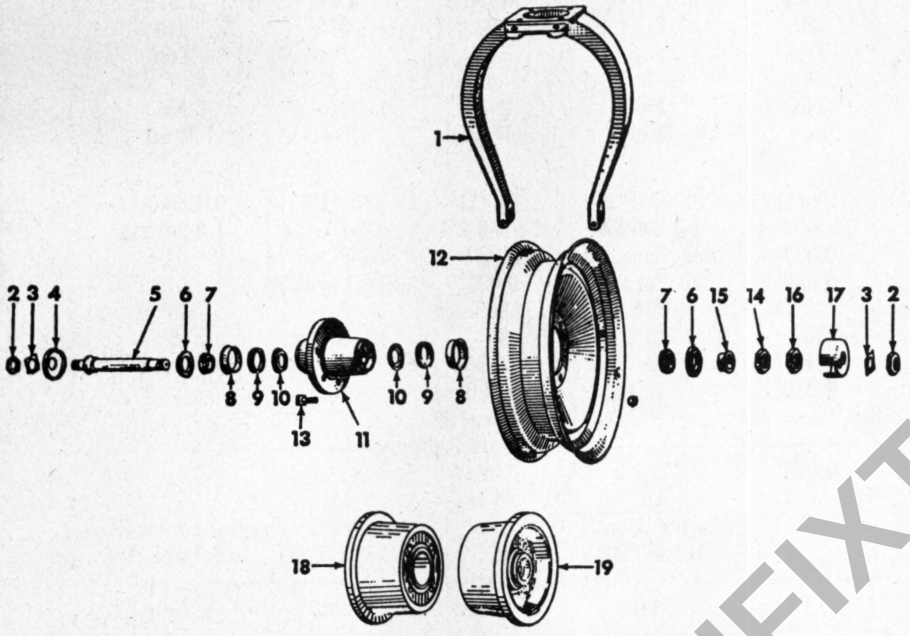

Fig. 1—Exploded view showing both types of fork mounted single front wheels. Axle (5) is fitted with taper roller bearings and is used with both types of wheels.

1. Fork
2. Jam nut
3. Lockwasher
4. Shield (short)
5. Axle
6. Oil seal
7. Bearing cone
8. Seal retainer
9. Bearing cup
10. Grease retainer
11. Hub
12. Wheel
13. Wheel bolt
14. Adjusting nut
15. Spacer
16. Jam nut
17. Shield (long)
18. Wheel half (male)
19. Wheel half (female)

DUAL WHEELS

All Farmall Models

2. The pedestal (17—Fig. 2) for tricycle type dual wheels is bolted to steering pivot shaft (16). The pedestal is available as a pre-riveted assembly or the pedestal and axle (18) are available as separate repair parts. Wheel bearings are adjusted to a slight preload.

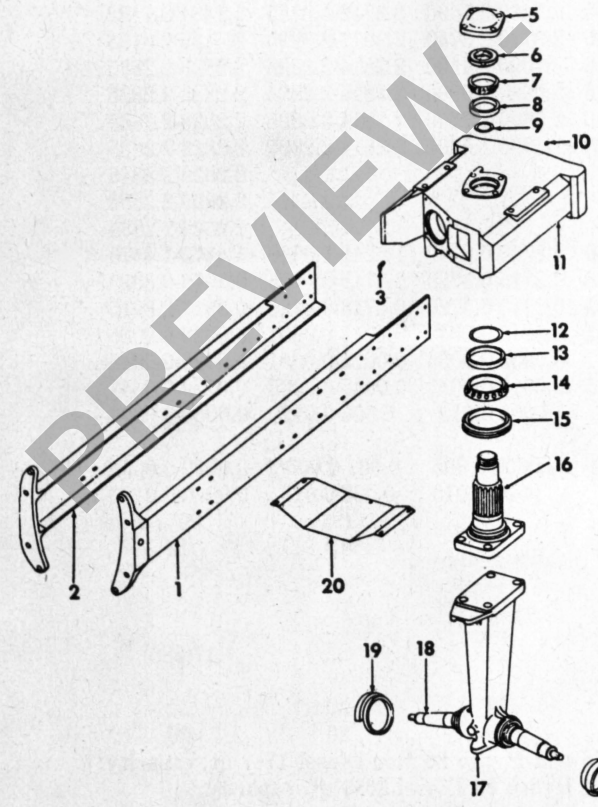

Fig. 2—Exploded view of front support, tricycle type front axle and components used on Farmall tractors.

1. Front frame R.H.
2. Front frame L.H.
3. Grease fitting
5. Cover
6. Shaft nut
7. Bearing cone
8. Bearing cup
9. "O" ring
10. Plug
11. Front support
12. "O" ring
13. Bearing cup
14. Bearing cone
15. Oil seal
16. Steering pivot shaft
17. Pedestal
18. Axle
19. Dust shield
20. Pulley shield

FRONT SYSTEM AXLE TYPE

AXLE MAIN MEMBER

All Farmall Models

3. Tractors are equipped with an adjustable wide front axle, refer to Fig. 3 or Fig. 4. Axle main member (24) pivots on pin (26) which is pinned in axle support (9). The two pivot pin bushings (25) are pressed into axle main member and should be reamed after installation to provide a free fit for the pivot pin.

To remove the axle main member, disconnect tie rods from steering arms. Support front of tractor, remove axle clamps (21—Fig. 3) or loosen clamp bolts (Fig. 4) and withdraw axle extension, steering knuckle and wheel assemblies. Remove pivot pin retaining pin, then disconnect stay rod ball from support (3—Fig. 3 or Fig. 4). Save shims (5) located between socket (4) and socket cap (6). Drive pivot pin out of axle support and axle main member. Remove axle main member. Stay rod (8—Fig. 3) can now be removed if necessary. Stay rod cannot be removed from main member in Fig. 4.

Reinstall by reversing the removal procedure and if necessary, adjust front wheel toe-in as outlined in paragraph 9.

Farmall 656-666-686-Hydro 70-Hydro 86 Hi-Clear

4. Farmall 656, 666, 686 Hydro 70 and Hydro 86 high clearance tractors

PREVIEW - YOUFIXTHIS.COM
Download full manual at youfixthis.com

SHOP MANUAL

INTERNATIONAL HARVESTER

SERIES 544-656-666-686-Hydro 70-Hydro 86

Engine serial number is stamped on left side of engine crankcase on all models except ones equipped with D239 or D310 diesel engines. On models equipped with D239 or D310 diesel engines, engine serial number is stamped on right side of engine crankcase.

Tractor serial number is stamped on name plate attached to right side of clutch housing or hydrostatic drive housing.

INDEX (By Starting Paragraph)

	544 Non-Diesel	544 Diesel	656 Non-Diesel	656 Diesel
BELT PULLEY	298	298	298	298
BRAKES				
Adjustment	295	295	295	295
Overhaul	297	297	297	297
CARBURETOR				
Gasoline	163	....	163	....
LP Gas	....	....	169	....
CLUTCH				
Engine	231	231	231	231
Torque Amplifier	233	233	233	233
COOLING SYSTEM				
Fan	211	211	210	210
Radiator	209	209	209	209
Water Pump	214	215	213	213
DIESEL FUEL SYSTEM				
Ether Starting Aid	....	204	....	....
Filters and Bleeding	....	174	....	174
Glow Plugs	....	....	....	203
Injection Pump and Drive	....	181	....	180
Injection Pump Timing	....	186	....	183
Nozzles	....	195	....	195
Precombustion Chambers	....	....	....	202
DIFFERENTIAL	286	286	286	286
DIRECTION REVERSER	239	239	239	239
ELECTRICAL SYSTEM				
Alternator and Regulator	217	217	217	217
Generator and Regulator	....	....	220	220
Magnetic Pulse Ignition	225	....	225	....
Standard Ignition	223	....	223	....
Starting Motor	221	221	221	221
ENGINE				
Balancer	63	148	....	....
Cam Followers	42	85	42	84
Camshaft	50	118	50	120
Connecting Rods and Bearings	57	134	57	135
Crankshaft	59	137	58	138
Crankshaft Seals	60	141	60	141
Cylinder Head	39	71	39	71
Cylinder Sleeves	....	129	54	130
Engine Removal	38	70	38	70
Flywheel	62	147	62	147
Ignition Timing	224	....	224	....
Injection Timing	....	186	....	183

PREVIEW - YOUFIXTHIS.COM

Download full manual at youfixthis.com

INDEX CONT.

	666, 686 Non-Diesel	666, Early 686 Diesel	Hydro 70, Hydro 86 Non-Diesel	Hydro 70, Early Hydro 86 Diesel	Late 686, Hydro 86 Diesel
GOVERNOR (Non-Diesel)	205	....	205	....	....
HYDRAULIC SYSTEM					
Auxiliary Valves	318	318	318	318	318
Auxiliary System Pump	23	23	23	23	23
Cylinder and Valve Unit	308	308	308	308	308
Lift Unit Pump	314	314	314	314	314
R&R Lift Unit	307	307	307	307	307
Test and Adjust	302	302	302	302	302
Trouble Shooting	301	301	301	301	301
HYDROSTATIC DRIVE					
Adjustments	249	249	249	249	249
Lubrication and Filter	278	278	278	278	278
Pressure Checks	256	256	256	256	256
R&R and Overhaul	262	262	262	262	262
Trouble Shooting	248	248	248	248	248
POWER STEERING SYSTEM					
Cylinder	34	34	34	34	34
Flow Divider	33	33	33	33	33
Hand Pump	27	27	27	27	27
Lubrication and Bleeding	12	12	12	12	12
Oil Cooler	37	37	37	37	37
Operational Tests	15	15	15	15	15
Pump	23	23	23	23	23
Steering Valves	30	30	30	30	30
PTO					
Pressure, Check and Adjustment	299	299	299	299	299
R&R and Overhaul	300	300	300	300	300
TORQUE AMPLIFIER					
Linkage Adjustment	233	233	....	....	233
Overhaul T.A. Clutch	237	237	....	....	237
R&R and Overhaul T.A.	238	238	....	....	238
TRANSMISSION, RANGE (Hydrostatic Drive)	279	279	279	279	279
TRANSMISSION (Standard 5-Speed)	240	240	....	....	240

CONDENSED SERVICE DATA

	544 Non-Diesel	544 Diesel	656 Non-Diesel	656 Diesel
GENERAL				
Engine Model	C200	D239	C263	D282
Number of Cylinders	4	4	6	6
Bore—Inches	3.812	3.875	3.563	3.687
Stroke—Inches	4.390	5.062	4.390	4.390
Displacement—Cubic Inches	200	239	263	282
Pistons Removed From	Top	Top	Top	Top
Main Bearings, Number of	3	5	4	4
Main and Rod Bearings, Adjustable?	No	No	No	No
Cylinder Sleeves	....	Wet	Dry	Dry

PREVIEW - YOUFIXTHIS.COM

Download full manual at youfixthis.com

VALVE ROTATORS

All Diesel Models

94. Positive type valve rotators are installed on both the inlet and exhaust valves. Two types of rotators are used. The D239 and D310 engines are equipped with "Rotocaps" (Fig. 59) and all other engines are equipped with "Rotocoils" (Fig. 60).

Normal servicing of the valve rotators consists of renewing the units. It is important, however, to observe the valve action after engine is started. Valve rotator action can be considered satisfactory if valve rotates a slight amount each time the valve opens.

The Rotocoil rotates the valve at a slower speed than the Rotocap. Rotocaps should not be installed on engines where Rotocoil rotators are specified.

VALVE TIMING

Valve timing is correct when the timing (punch) marks on the timing gear train are properly aligned as shown in Figs. 61, 62, 63 and 64. To check valve timing on an assembled engine, follow the procedure outlined in the following paragraphs.

Model 544 Diesel

95. To check valve timing, remove rocker arm cover and crank engine to position number one piston at TDC of compression stroke. Adjust number one intake valve tappet gap to 0.014. Place a 0.004 feeler gage between valve lever and valve stem of number one intake. Slowly rotate crankshaft in normal direction until valve lever becomes tight on feeler gage. At this point, number one intake valve will start to open and timing pointer should be within the range of 23 to 29 degrees before top dead center.

NOTE: One tooth "out of time" equals approximately 11 degrees.

Readjust number one intake valve tappet gap as outlined in paragraph 77.

Model 656 Diesel

96. To check valve timing, remove rocker arm cover and crank engine to position number one piston at TDC of compression stroke. Adjust number one intake valve tappet gap to 0.030. Slowly turn crankshaft in normal direction of rotation until valve lever becomes tight against number one intake valve stem and the push rod can no longer be turned by hand. At this point, number one intake valve will start to open and timing pointer should be at or near the 12 degrees BTDC mark on crankshaft pulley.

NOTE: One tooth "out of time" equals approximately 13 degrees.

Readjust number one intake valve tappet gap as outlined in paragraph 76.

Models 666-686-Hydro 70-Hydro 86 (D312)

97. To check valve timing, remove rocker arm cover and crank engine to position number one piston at TDC of compression stroke. Adjust number one cylinder intake valve tappet gap to 0.016 on models with engine SN2504 and lower or 0.020 on models with engine SN2505 and higher. Place a 0.004 feeler gage between valve lever and valve stem of number one intake valve. Slowly rotate crankshaft in normal direction until valve lever becomes tight on feeler gage. At this point, on engine SN2504 and below, number one intake valve will start to open and timing pointer should be 30 degrees ±3 degrees BTDC on flywheel. Engine SN2505 and above number one intake valve will start to open and timing pointer should be 23 degrees ±3 degrees BTDC on flywheel.

NOTE: One tooth "out of time" equals approximately 11 degrees on flywheel.

Readjust number one intake valve tappet gap as outlined in paragraph 78.

Models 686-Hydro 86 (D310)

98. To check valve timing, remove rocker arm cover and crank engine to position number one piston at TDC of compression stroke. Adjust number one cylinder intake valve tappet gap to 0.014. Place a 0.004 feeler gage between valve lever and valve stem of number one intake valve. Slowly rotate crankshaft in normal direction until valve lever becomes tight on feeler gage. At this point, number one intake valve will start to open and timing pointer should be within the range of 23 to 29 degrees BTDC on the flywheel.

NOTE: One tooth "out of time" equals approximately 11 degrees.

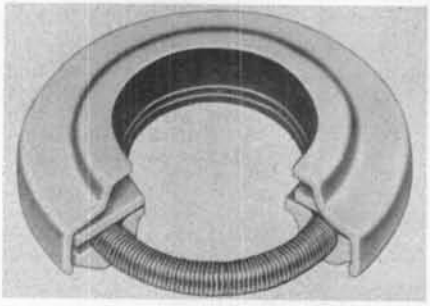

Fig. 60—Cut-away view showing construction of a "Rotocoil" valve rotator.

Readjust number one intake valve tappet gap as outlined in paragraph 79.

TIMING GEAR COVER

Models 544-656 Diesel

99. To remove the timing gear cover, first remove hood, drain cooling system and disconnect battery cables. Identify and disconnect steering lines and oil cooler lines and plug openings to prevent dirt from entering the system. Disconnect air cleaner inlet hose and radiator hoses. Support tractor under clutch housing or hydrostatic drive housing. Attach a hoist to front support, then unbolt and remove front support, radiator, front axle and wheels as an assembly. Unbolt and remove fan, generator or alternator and drive belts.

On Model 544, remove the water pump pulley, then unbolt and remove water pump assembly. Disconnect tachometer drive cable and remove tachometer drive. Do not lose the small driving tang when removing tachometer drive. Remove the three cap screws, flat washer and pressure ring from crankshaft. Tap pulley with a plastic hammer to loosen it, then slide pulley off of the wedge rings.

On Model 656, remove crankshaft nut and clamp a bearing splitter deep in the fan drive belt groove of the crankshaft pulley. Attach puller to bearing splitter and remove crankshaft pulley.

Then, on Models 544 and 656 remove cap screws retaining oil pan to timing gear cover and loosen the remaining oil pan cap screws. Unbolt timing gear cover, then pull cover forward off the dowels and remove from engine. Use care not to damage oil pan gasket.

Reassemble by reversing the disassembly procedure. On Model 656, tighten crankshaft pulley retaining nut to a torque of 95 ft.-lbs.

On Model 544, install one pressure ring on the crankshaft with thick end towards engine. Install the wedge rings in pulley bore so that slots in rings are 90 degrees apart. Slide pulley onto crankshaft and align with timing pin. Install pressure ring, flat washer and three cap screws. Tighten cap screws to a torque of 55 ft.-lbs.

Models 666-686-Hydro 70-Hydro 86 (D312)

100. To remove the timing gear cover, first remove hood, drain cooling system and disconnect battery cables. Disconnect air cleaner inlet hose and radiator hoses. Identify and disconnect power steering lines, and identify and disconnect hydraulic oil cooler lines. Plug or cap openings to prevent dirt or other foreign material from entering

PREVIEW - YOUFIXTHIS.COM

Download full manual at youfixthis.com

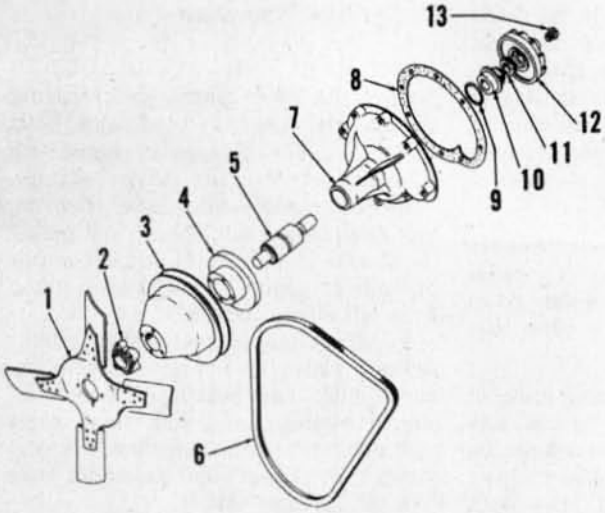

Fig. 117—Exploded view of water pump used on Model 544 (D239) and Models 686 and Hydro 86 (D310) diesel engines.

1. Fan
2. Fan spacer
3. Pulley
4. Hub
5. Pump shaft & bearing
6. Alternator & water pump belt
7. Body
8. Gasket
9. "O" ring
10. Seal assembly
11. Impeller face ring
12. Impeller
13. Plastic screw

age (IH part No. 398179R92) is available.

When reassembling, reverse the disassembly procedure and keep the following points in mind: When installing seal (4), press only on outer diameter. Install hub with small diameter facing out. Press impeller on shaft until there is 0.031 clearance between machined face of pump body and face of impeller. Reinstall pump by reversing removal procedure, using a new pump mounting gasket and by-pass seal. Install fan and adjust the belt as outlined in paragraph 211.

Model 544 (D239), Models 686-Hydro 86 (D310)

215. **R&R AND OVERHAUL.** To remove the water pump, first drain the cooling system, then remove hood and hood skirts. Loosen alternator mounting bolts and remove the drive belt. Unbolt and remove fan (1—Fig. 117), spacer (2) and pulley (3). Remove cap screws securing pump body (7) to water pump carrier. Then, remove pump from tractor.

Disassemble the pump as follows: Remove plastic screw (13) and using a ½-x2-inch NC cap screw for a jack screw, force the impeller (12) off rear end of shaft. Using two screwdrivers, pry seal assembly (10) out of pump body. Support hub (4) and press out shaft. Press shaft and bearing assembly (5) out front of body. Make certain that body is supported as close to bearing as possible.

When reassembling, press shaft and bearing assembly into body using a piece of pipe so pressure is applied only to outer race of bearing. Bearing race should be flush with front end of body. Install new "O" ring (9) and seal (10). Press only on outer diameter of seal. Support the shaft assembly and press hub on shaft until hub is flush with end of shaft. Install face ring (11) in impeller (12), then press impeller on shaft until there is a clearance of 0.012-0.020 between body and front of impeller (opposite fins). Install plastic screw.

Using a new gasket (8), reinstall pump by reversing the removal procedure. Install fan and adjust the belt as outlined in paragraph 211.

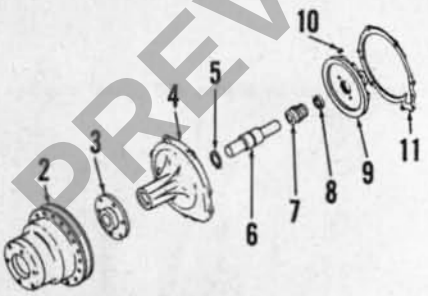

Fig. 118—Exploded view of water pump assembly used on Models 666, 686, Hydro 70 and Hydro 86 equipped with D312 diesel engines.

2. Pulley
3. Hub
4. Housing
5. Snap ring
6. Bearing & shaft assembly
7. Seal
8. Rubber bushing & ceramic seal
9. Impeller
10. Dowel (2 used)
11. Gasket

Models 666-686-Hydro 70-Hydro 86 (D312)

216. **R&R AND OVERHAUL.** To remove the water pump, first remove fan as outlined in paragraph 212. Remove cap screws securing pump body (4—Fig. 118) to front cover, then remove pump.

Disassemble water pump as follows: Using a puller remove the fan hub (3). Then, remove snap ring (5) and press the shaft and bearing assembly (6) out of impeller (9) and housing (4). Make

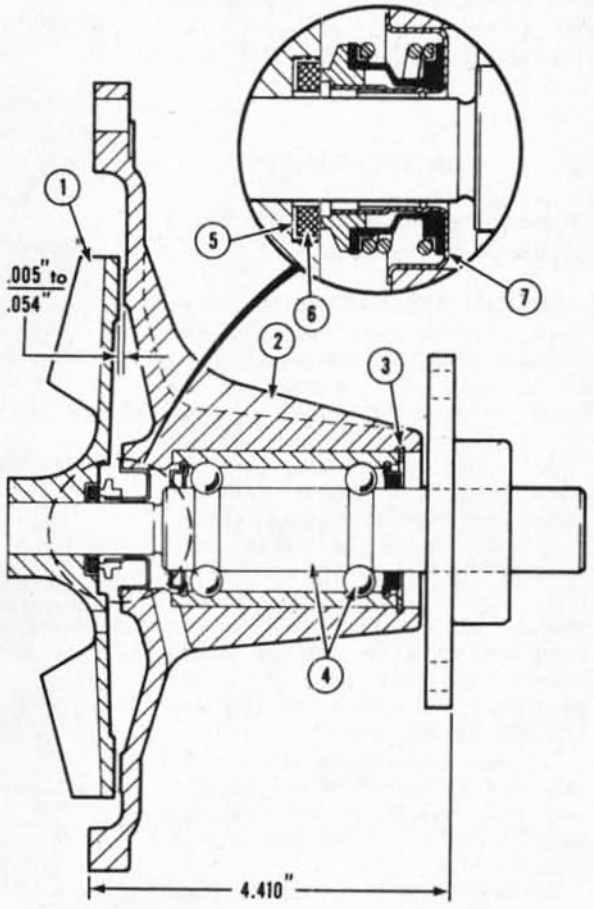

Fig. 119—Sectional view of water pump and components. Also dimension for installing fan hub and impeller.

1. Impeller
2. Housing
3. Snap ring
4. Shaft & bearing assy.
5. Rubber housing
6. Ceramic seal
7. Bearing housing seal

PREVIEW - YOUFIXTHIS.COM

Download full manual at youfixthis.com

Lubricate all parts with "Hy-Tran" fluid and reassemble by reversing the disassembly procedure. Spring seat (4) must be installed with beveled side away from cylinder block spring (5) and spring retainer (9) installed with retaining ring groove away from spring. When installing ball guide (2), align the wide tooth of internal splines to the two ground off teeth of internal splines on cylinder block.

NOTE: Before installing input shaft and swashplate on pump, adjust pump swashplate trunnion bearings as follows: Install pump swashplate, trunnion bearings and trunnions in position in hydrostatic drive housing. Do not install "O" rings or shims at this time. Tighten cap screws in left-hand trunnion to 35 ft.-lbs. Torque two cap screws opposite to one another in right trunnion to 25 in.-lbs. while rocking the swashplate. Then, without rocking swashplate, tighten the cap screws to 50 in.-lbs. Using a feeler gage, measure the gap between right trunnion flange and housing beside each of the two cap screws. Select a shim pack equal in thickness to the average of the two measurements. Remove both trunnions, bearings and swashplate. Keep each bearing with its trunnion and keep the selected shim pack with the right trunnion and set them aside for later installation.

Install the input shaft and swashplate with thrust plate on pump by reversing the removal procedure. Be sure to position the horseshoe tool between pto drive gear and swashplate with open side of tool opposite from servo cylinder attaching ears. Install spring guide (10) and bearing plate centering spring (8) before pressing input shaft rear bearing into position against shoulder on shaft.

268. VALVE PLATES AND BEARING PLATES. Inspect the steel valve plates and brass bearing plates for excessive wear or scoring in the areas shown in Figs. 195 and 196. Although bearing plates and valve plates are available separately, a valve plate and bearing plate must be renewed as a set for either the pump or the motor. This will assure proper sealing between the plates which is necessary for efficient operation.

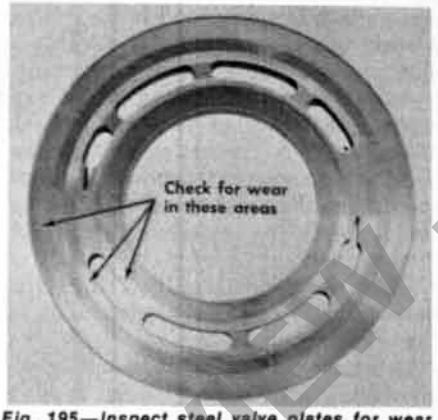

Fig. 195—Inspect steel valve plates for wear or scoring in the areas shown.

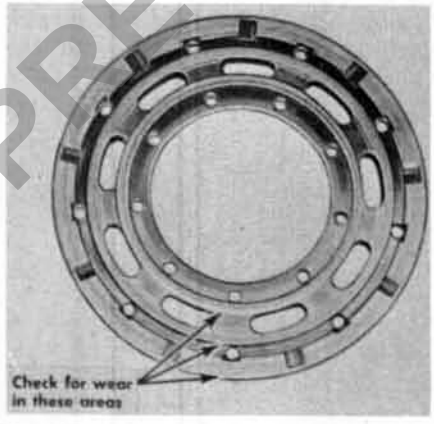

Fig. 196—Inspect brass bearing plates for wear or scoring in the areas shown.

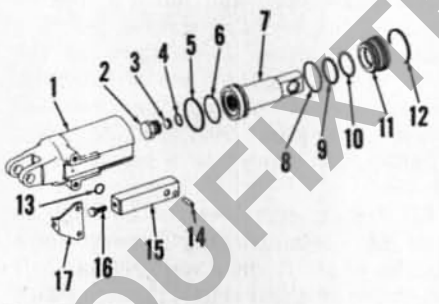

Fig. 197—Exploded view of pump servo cylinder assembly.

1. Cylinder body
2. Fixed orifice plug
3. Orifice screen
4. "O" ring
5. Teflon seal ring
6. "O" ring
7. Piston
8. "O" ring
9. Teflon seal ring
10. "O" ring
11. Piston guide
12. Retaining ring
13. "O" ring
14. Dowel pin
15. Adjusting block
16. Adjusting bolt
17. Block support bracket

269. SERVO CYLINDERS. The servo cylinders (Fig. 197 and 198) are of similar construction except for the variable orifice adjusting block used on the pump servo. Unbolt and remove block support bracket (17—Fig. 197) and adjusting block (15) from pump servo cylinder. Then, on either servo cylinder, clamp cylinder body (1—Fig. 197 or 198) in a vise. Using a spanner wrench, rotate piston guide (11) and remove retaining ring (12). Remove piston guide and piston assembly from cylinder body. Slide piston guide from piston. Remove external "O" ring (8) and internal Teflon seal ring (9) and "O" ring (10) from piston guide. Remove Teflon seal ring (5) and "O" ring (6) from piston. Clamp flat sides of piston in a brass jawed vise and remove fixed orifice plug (2) and orifice screen (3).

Clean and inspect all parts. Check servo cylinder body and piston for scoring and renew as necessary. Renew all "O" rings and Teflon seal rings and reassemble by reversing the disassembly procedure.

NOTE: Soak Teflon seal ring (5) in water heated to 200°F for a few minutes before installing on piston.

270. CONTROL CAM AND VARIABLE ORIFICES. Inspect the control

Fig. 198—Exploded view of motor servo cylinder assembly.

1. Cylinder body
2. Fixed orifice plug
3. Orifice screen
4. "O" ring
5. Teflon seal ring
6. "O" ring
7. Piston
8. "O" ring
9. Teflon seal ring
10. "O" ring
11. Piston guide
12. Retaining ring

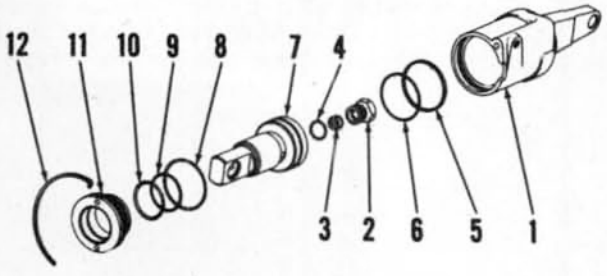

Fig. 199—View showing correct installation of spring washer on pump servo variable orifice. Spring washer is not used on motor servo variable orifice.



PREVIEW - YOUFIXTHIS.COM
BestManuals.net

Download full manual at youfixthis.com

PREVIEW ONLY

You're viewing 12 of 122 pages

The full manual includes:

- All 122 pages, complete
- Searchable PDF (find any keyword)
- No watermarks
- Instant download
- Print-ready quality

GET FULL MANUAL NOW

International Harvester 544, 656, 666, 686, Hydro 70, Hydro 86 Shop Manual

Scan or click anywhere
youfixthis.com

Click anywhere on this page to get the full manual