Speed Transmission Split with Control Center on Rear Frame

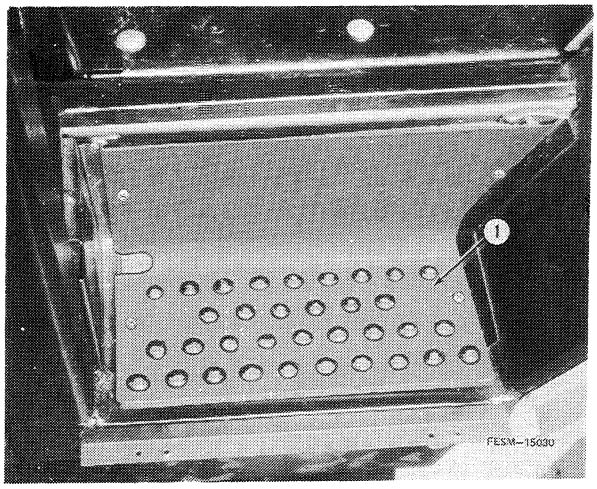

1. Step panel

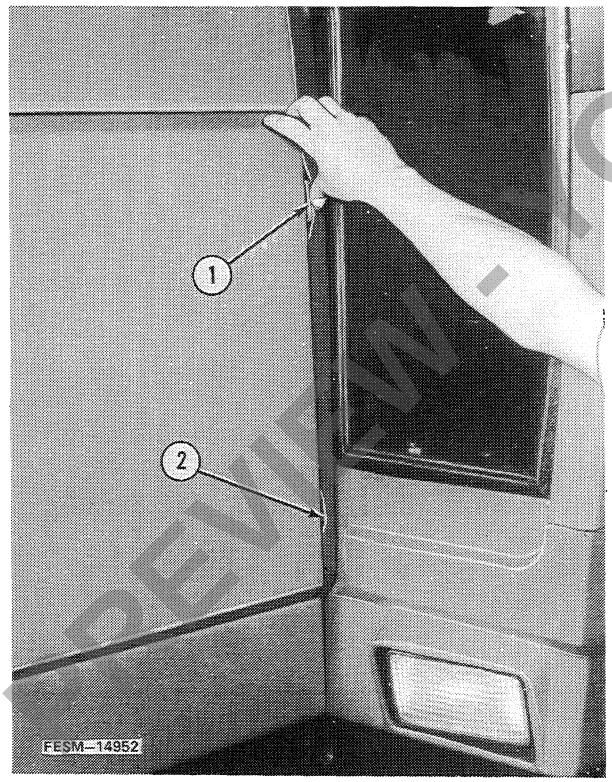

1. Upper latch
2. Lower latch

Splitting the Tractor

1. Remove the left and right inner step panels and disconnect the battery cables from the terminals. Disconnect the negative cable first.

2. Remove both lower front control center light panels and disconnect the electrical wires from the lights.

NOTE: Observe the routing of the electrical wires in there mounting clips (tag as required) for proper reassembly.

3. Remove the drawbar and drain the Hy-Tran from the speed and range transmissions.

4. Remove all the hood sheet metal. To remove the side panel doors push in the latch hinges which are located behind the rubber seal. Then release the front latch and remove the panel door.

NOTE: Hood sheet metal requires removal in order to setup splitting stands plus removal of the A/C compressor and condenser.

PREVIEW - YOUFIXTHIS.COM

Download full manual at youfixthis.com

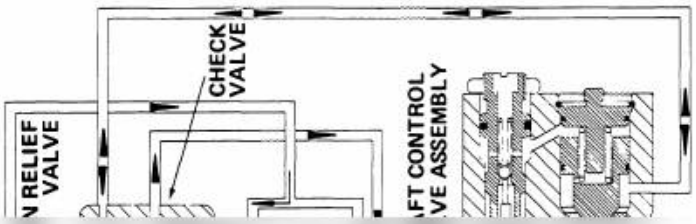

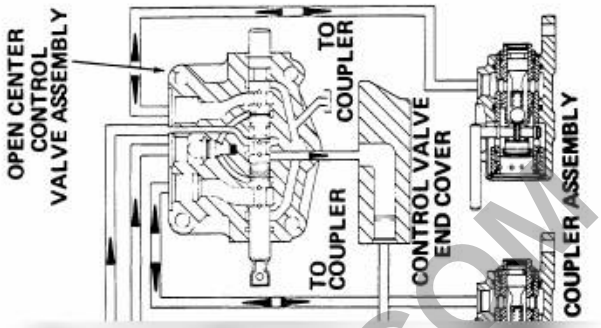

PREVIEW - YOUFIXTHIS.COM

Blurred on purpose. The manual you buy has this page in full quality.

Download full manual at youfixthis.com

General Contents

Page

Safe Work Rules, Metric Conversion Tables, Standard Torque
Data for Hydraulic Tubes and Fittings, Standard Torque
Data for Nuts and Bolts, Special Service Tools Required ..... IV–XIII

1 A/C AND TRACTOR SPLITS
2 FRONT AXLE, BOLSTER AND WHEELS
3 STEERING
4 ENGINE
5 FUEL SYSTEM
6 ELECTRICAL SYSTEM
7 COOLING SYSTEM
8 CLUTCH AND FLYWHEEL
9 TRANSMISSION
10 REAR FRAME ASSEMBLY
11 REAR AXLE ASSEMBLY
12 BRAKES
13 INDEPENDENT POWER TAKE OFF
14 HYDRAULIC SYSTEM
15 TESTING HYDRAULIC SYSTEM

PREVIEW FROM YOUFIXTHIS.COM

Download full manual at youfixthis.com

Due to a continuous program of research and development, some procedures, specifications and parts may be altered in a constant effort to improve our products.

When changes and improvements are made in our products, periodic revisions may be made to this manual to keep it up-to-date. It is suggested that customers contact their dealer for information on the latest revision.

NOTE: Some illustrations in this manual show equipment not currently available. The illustrations are used primarily to cover serviceability and may not always represent production equipment.

LIBRARY FILING INFORMATION

1. File this Manual after Divider Tab GSS-1504.
2. Enter the following information in the Service Manual Index.
   A. On page 7 of the Tractor Section, enter 3088, 3288, 3488, 3688 and page 34.
   B. On page 34 of the Tractor Section, enter tractor model heading 3088, 3288, 3488 and 3688, manual description and form number.

CHASSIS
3088, 3288, 3488 and 3688
Tractors

GSS-1504
September, 1981

NOTE: Refer to the following service manuals for service information not contained in this manual:

GSS-1052-C	Testing and Servicing Electrical Equipment
GSS-1427-1	300 and 400 Series Diesel Engines and Fuel System (American Bosch)
GSS-1455-1	Basic Air Conditioning
GSS-1480	Hydrostatic Transmission
GSS-1281-K	Clutches
GSS-1377	D-155, D-179, D-206, D-239, D-310 and D-358 Diesel Engines and Fuel System (Robert Bosch)

PREVIEW - YOUFIXTHIS.COM
Download full manual at youfixthis.com

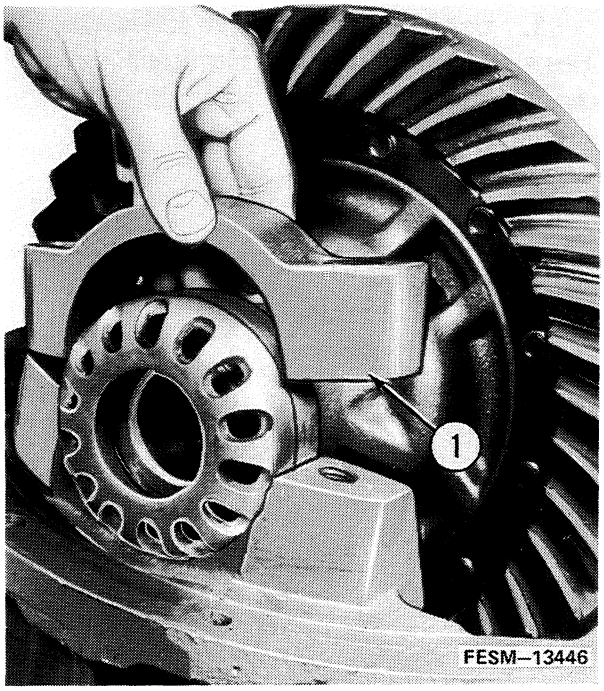

5. Remove the bearing cap mounting bolts and lockwashers.

6. Lift off the bearing caps.

1. Bearing cap

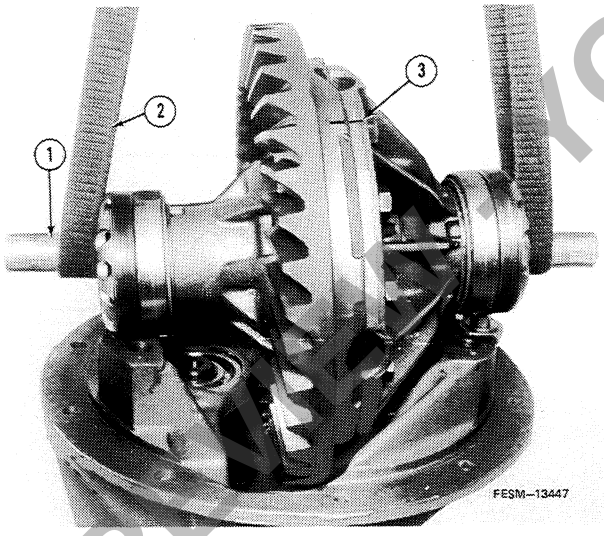

7. Position a steel pipe through the differential carrier and hoist out the assembly from the housing.

8. Place the differential unit on a clean work bench and lift off the bearing adjusting nuts and the bearing caps.

Using an appropriate puller, remove the differential bearings.

9. Using a center punch, index the differential halves and the ring gear to assure correct wear patterns for reassembly.

1. Steel pipe
2. Sling
3. Index markings

PREVIEW ONLY YOUFIXTHIS.COM

Download full manual at youfixthis.com

Section 4

ENGINE

Contents

	Page
Clutch Split	**4-2**
Splitting the Tractor	**4-2**
Recoupling the Tractor	**4-6**
Engine Removal	**4-7**

PREVIEW - YOUFIXTHIS.COM

Download full manual at youfixthis.com

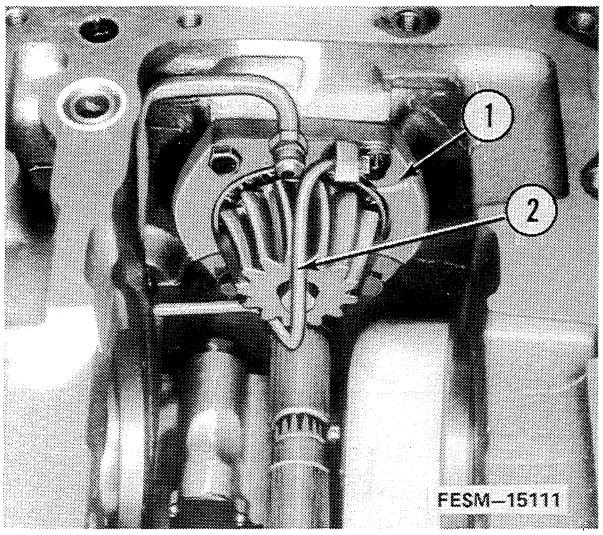

3. Remove the mainshaft bearing retainer cap screws and retainers.

4. Remove the oil supply tube.

1. Mainshaft bearing cage
2. Oil supply tube

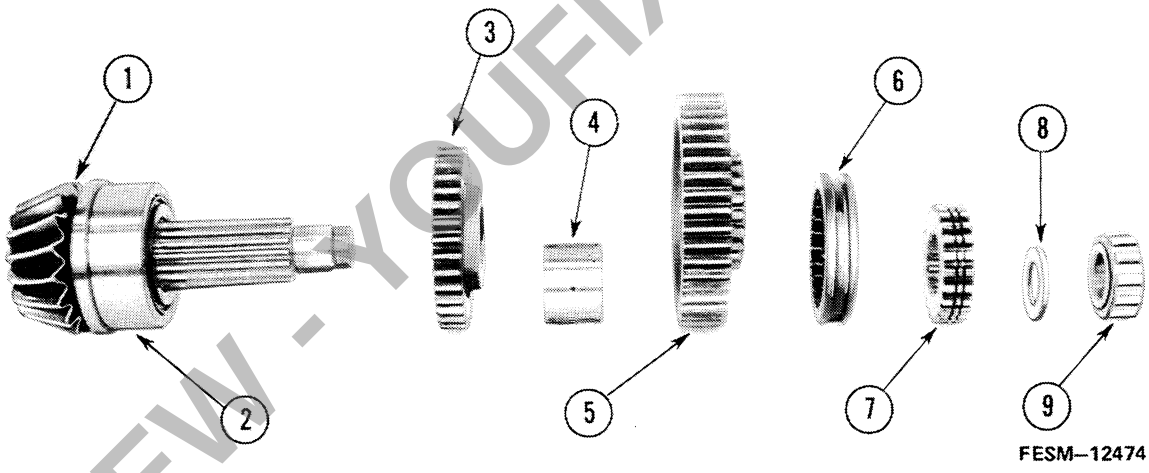

1. Mainshaft
2. Rear bearing cage
3. Reverse driven gear
4. Lo driven gear carrier
5. Lo driven gear
6. Hi-Lo shift collar
7. Shift collar carrier
8. Spacer
9. Front bearing

5. Pull the mainshaft rearward while removing the gears from it.

PREVIEW - YOUFIXTHIS.COM

Download full manual at youfixthis.com

Differential Assembly

Removal

NOTE: Make the rear frame split with the control center on the speed transmission. Refer to Section 1.

1. Place the park lock in the disengaged position. This will prevent the park lock pawl from engaging the park lock gear allowing transmission range cover removal.

2. Remove the range transmission cover.

3. Remove the rear frame cover.

4. Remove the lube tube from the differential bearing retainer.

5. Support the differential assembly and remove the bearing retainers.

6. Lift out the differential assembly.

7. Remove the pinion shaft. (Refer to Section 9.)

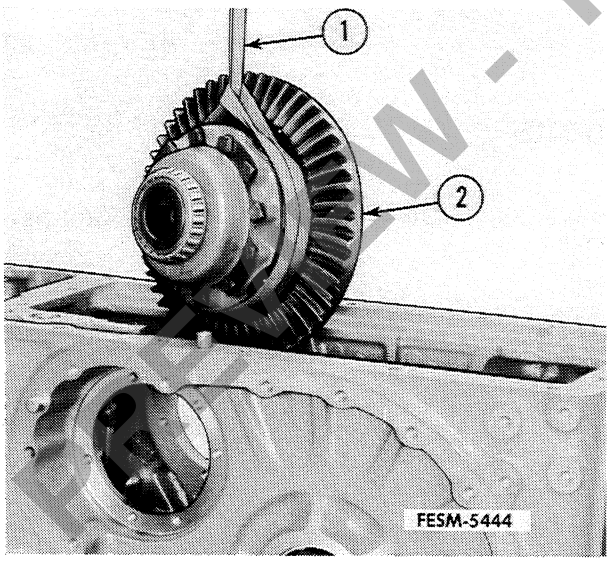

1. Sling
2. Differential assembly

PREVIEW - YOUFIXTHIS.COM

Download full manual at youfixthis.com

Removal and Disassembly

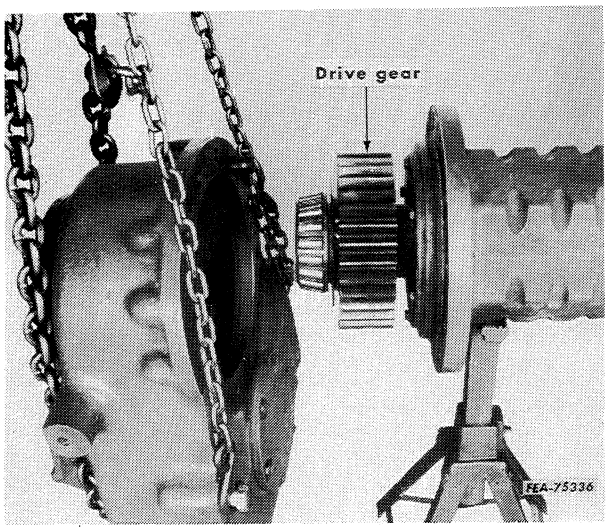

NOTE: Reference numbers refer to illustration on page 11-9.

1. Drain the lubricant from the drop housing to be serviced. Support the tractor under the rear frame and remove the wheel.

2. Remove the drop housing (18) from the axle carrier.

3. Remove the bearing caps (21 and 32) and the pan (19).

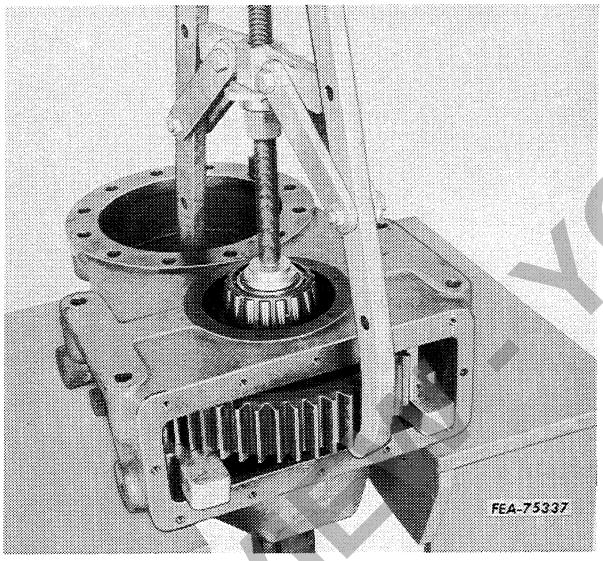

4. Press or pull the gear (28) and bearing cone from the shaft.

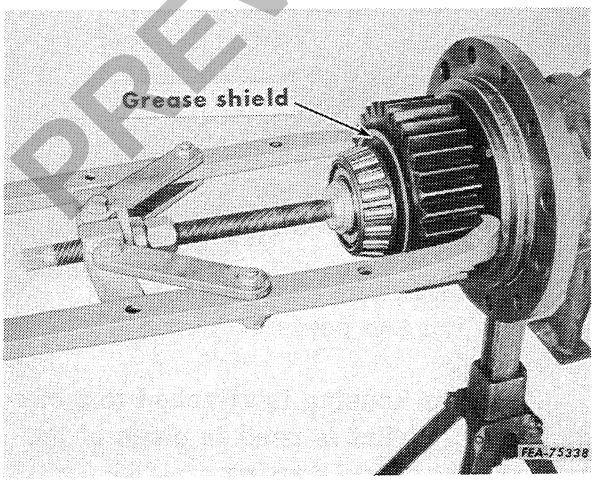

5. Using a puller, remove the drive gear (10), retainer (11) and bearing (12) as shown. Remove the snap ring (9) and the oil seal retainer (6).

6. If further disassembly is required, refer to "Rear Axle and Bull Pinion Shaft" in this section.

Download full manual at youfixthis.com

Auxiliary Valve (Raise)

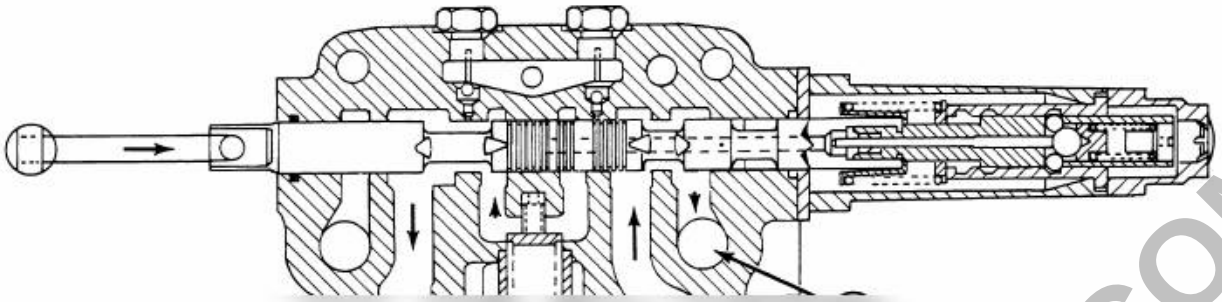

PREVIEW - YOUFIXTHIS.COM

Blurred on purpose. The manual you buy has this page in full quality.

Download full manual at youfixthis.com

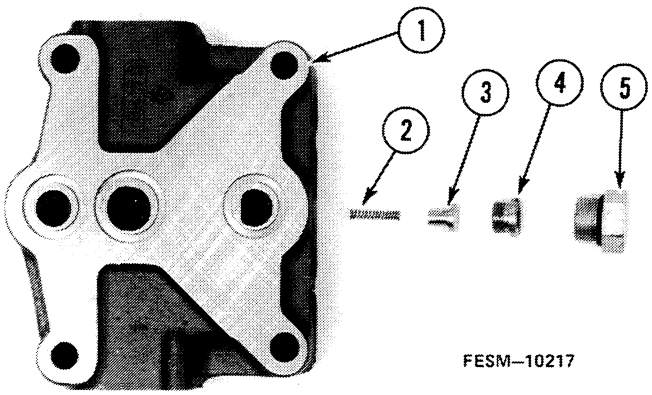

Open Center

1. Auxiliary valve
2. Spring
3. Reverse flow check valve
4. Reverse flow check valve seat
5. Outer plug

7. Remove the reverse flow check valve as follows:

(3088 and 3288 Tractors)

a. Remove the plug from the valve body.

b. Remove the inside plug and remove the check valve and spring.

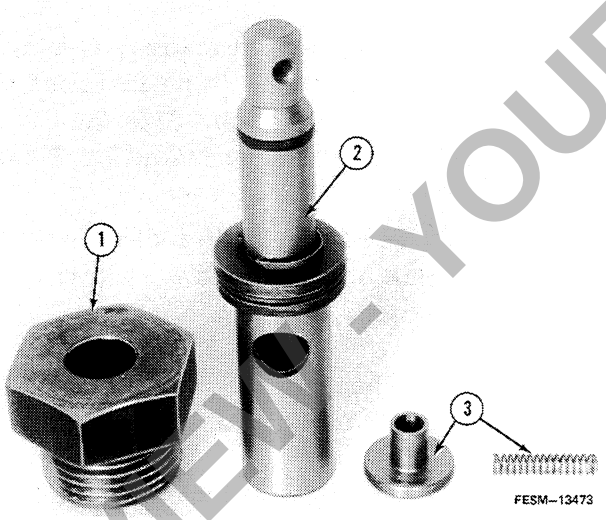

Power Priority

(3488 and 3688 Tractors)

a. Remove the variable orifice spool nut.

b. Remove the valve spool and check valve using care not to lose the small parts.

1. Spool retainer nut
2. Valve spool
3. Check valve and spring

Inspection and Repair

1. Replace all O-rings.

2. Check all springs.

3. Check the spool and body for scoring and wear.

NOTE: The spool and body are not serviced separately but are a matched set.

4. Check the detent balls and detent sleeve for wear and replace if necessary.

5. Check the detent piston and replace if necessary.

PREVIEW - YOUFIXTHIS.COM
Download full manual at youfixthis.com

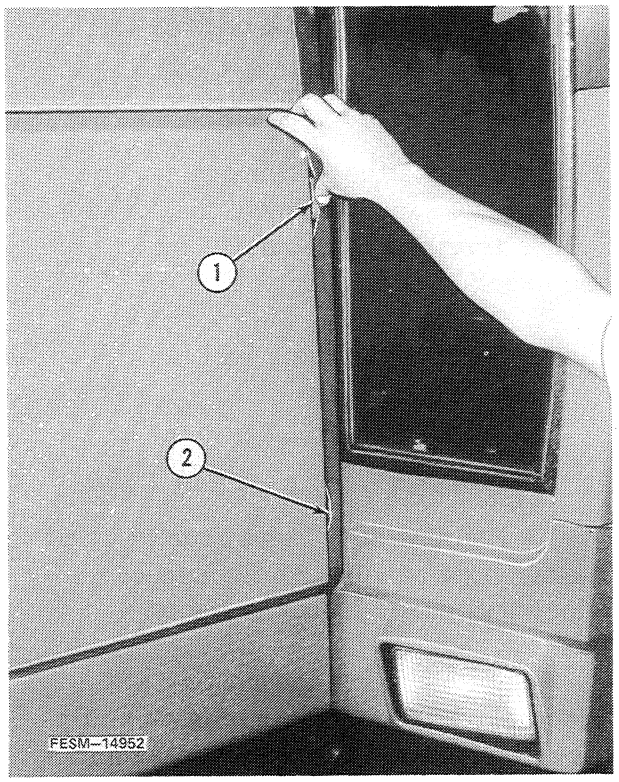

6. Remove all the hood sheet metal. To remove the side panel doors push in the latch hinges which are located behind the rubber seal. Then release the front latch and remove the panel door.

NOTE: The lower side panel must be removed to install 17-526 Tractor Handler. The hood must be removed to prevent breaking the control center windshield or damaging the hood when the rear of the control center is raised to clear the auxiliary valves.

1. Upper latch
2. Lower latch

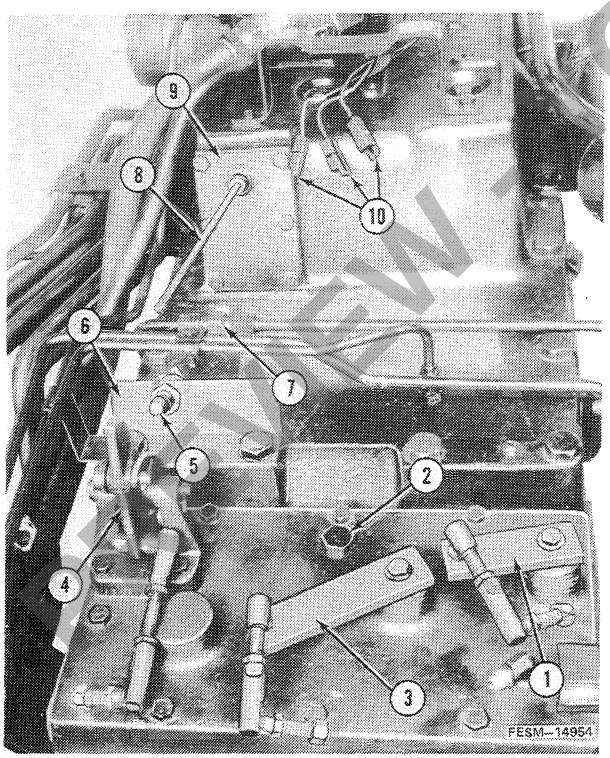

NOTE: The control center was removed to give a clear view of items called out.

7. Place the park lock in the disengaged position then disconnect and/or remove the items called out in the illustration.

1. Reverse shift linkage
2. MPH transducer (if equipped)
3. Hi-Lo shift linkage
4. Park lock linkage
5. Park lock switch electrical connection
** 6. Park lock switch mounting plate (does not require removal)
7. Brake lube tee
* 8. Drop rate cable
9. Drop rate cover
10. Remote plug electrical connectors

*Must be removed while raising the rear of the control center.
**Items called out for identification only.

REVIEW - YOUFIXTHIS.COM

Download full manual at youfixthis.com

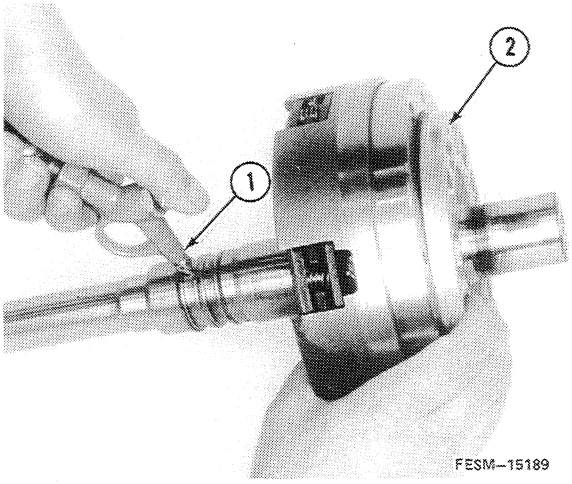

1. Compress air
2. Direct drive piston

11. Apply air pressure to the direct drive port in shaft to remove the piston.

12. Remove the front snap ring and slip shaft from the carrier.

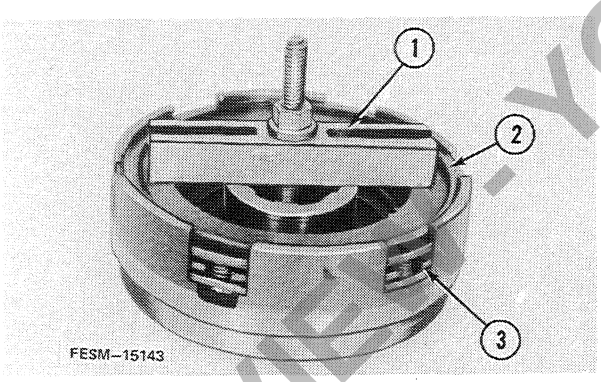

1. Puller bridge
2. Snap ring
3. TA clutch pack

13. Use puller bridge to compress the lock-up clutch springs and remove the large snap ring.

14. Lift the lock up clutch plates out of the TA lock up carrier.

PREVIEW - YOUFIXTHIS.COM

Download full manual at youfixthis.com

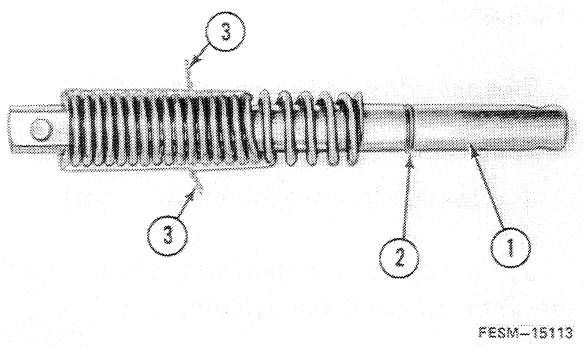

1. Park lock shaft
2. O-ring
3. Wires

7. Place the shaft and spring on a workbench and cut the wires. Now remove the spring and O-ring from the shaft.

8. Complete disassembly of the park lock components as required.

PREVIEW - YOUFIXTHIS.COM

Download full manual at youfixthis.com

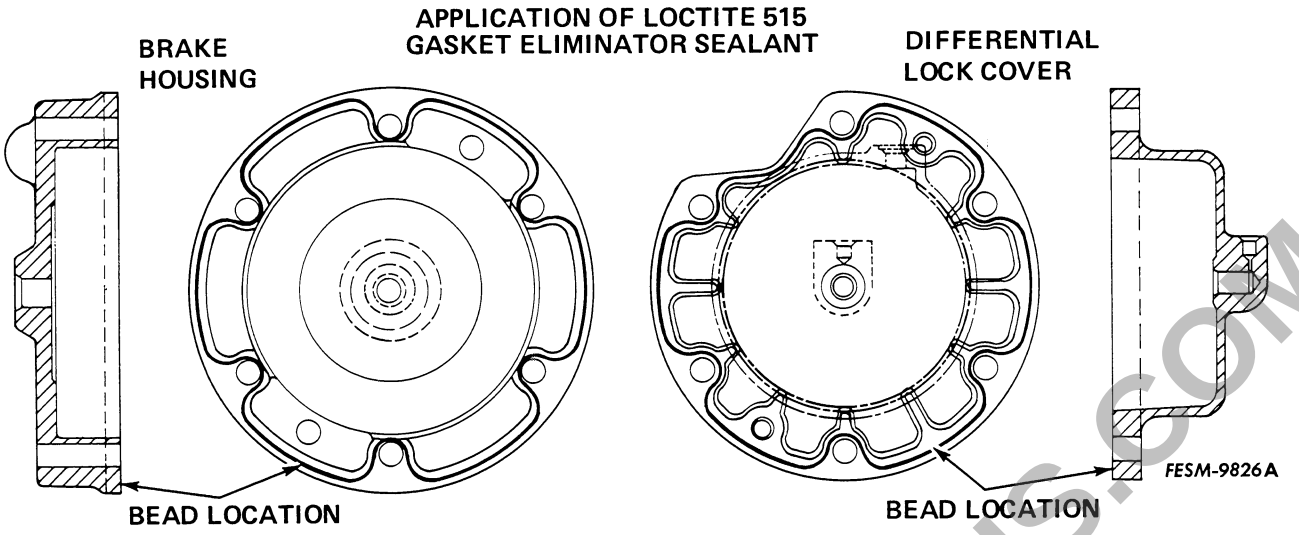

Installation

Installation is the reverse of removal.

NOTE: The brake piston, brake piston housing and differential lock cover must be resealed with Loctite 515 gasket eliminator sealant.

NOTE: If the brake wear switch was removed or loosened for any reason refer to Brake Wear Switch Adjustment in Section 12.

PREVIEW - YOUFIXTHIS.COM

Download full manual at youfixthis.com

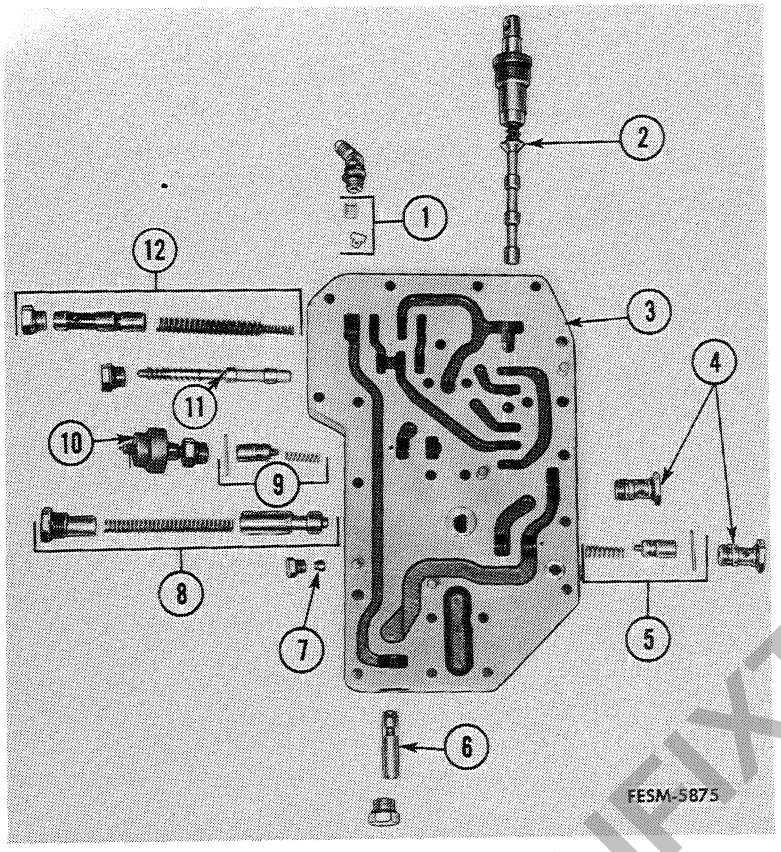

1. Brake lube check valve
2. Drive selector valve assembly
3. Multiple control valve body
4. Union plugs
5. Oil cooler by-pass valve
6. Safety valve assembly
7. Flow control orifice
8. Flow control valve
9. Lubrication regulator valve assembly
10. Transmission oil pressure switch
11. Clutch dump valve
12. Pressure regulator valve assembly

MCV equipped with TA

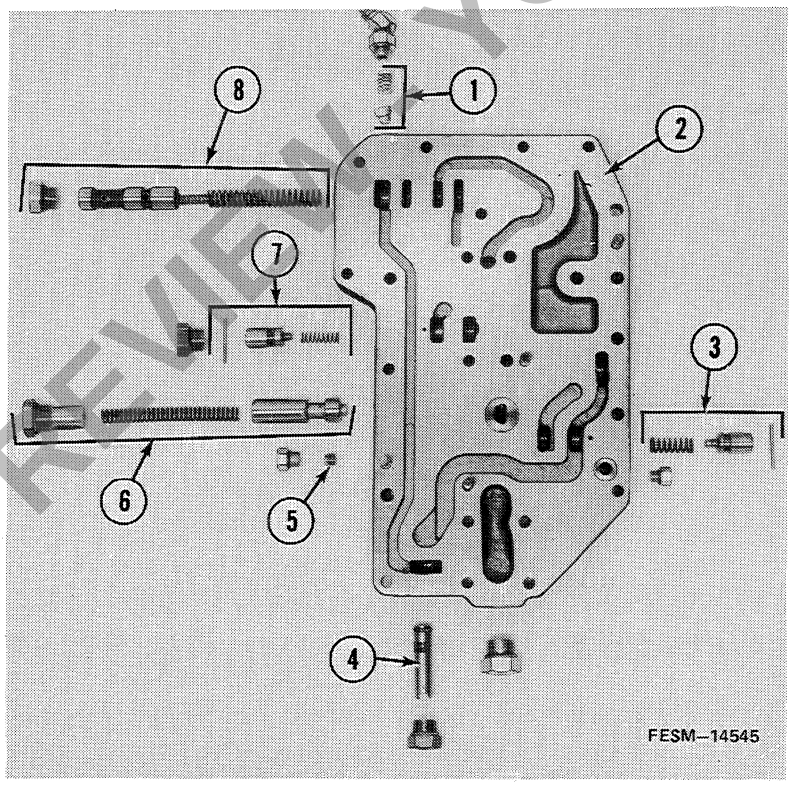

1. Brake lube check valve
2. Multiple control valve body
3. (Oil cooler) by-pass valve
4. Safety valve assembly
5. Flow control orifice
6. Flow control valve
7. Lubrication regulator valve assembly
8. Pressure reguiator valve assembly

MCV without TA

Download full manual at youfixthis.com

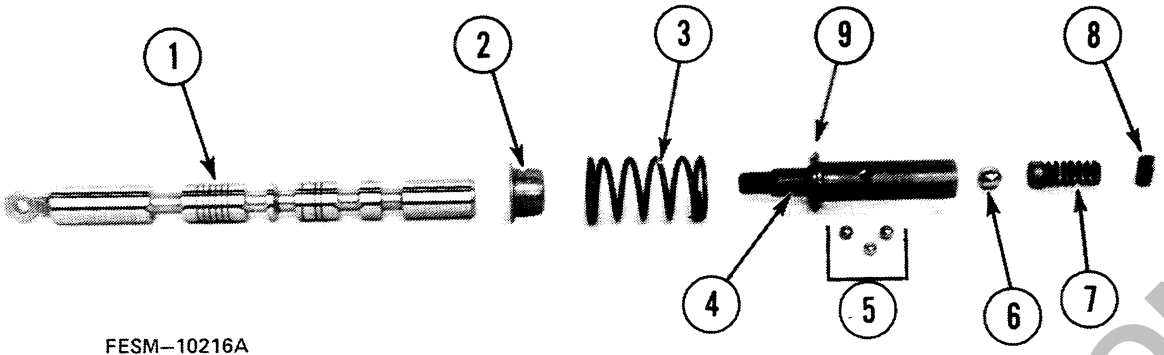

FESM–10216A

1. Spool
2. Spring retainer
3. Centering spring
4. Centering spring actuator
5. Detent balls
6. Detent actuating ball
7. Detent spring
8. Plug
9. Spring retainer

NOTE: Illustration shows the disassembly of the spool assembly.

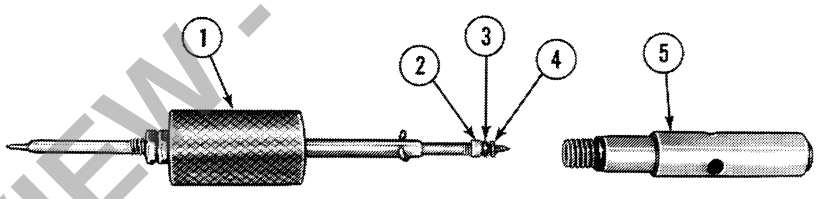

FESM-4111A

1. 05-36 Tool
2. Actuator valve plug
3. O-ring
4. Back-up washer
5. Actuator

6. Using 05-36 Carburetor Jet Tool, remove the actuator valve plug, O-ring and back-up washer.

NOTE: The carburetor tool is a LH thread.

PREVIEW - YOUFIXTHIS.COM

Download full manual at youfixthis.com

PREVIEW ONLY

You're viewing 17 of 497 pages

The full manual includes:

- All 497 pages, complete
- Searchable PDF (find any keyword)
- No watermarks
- Instant download
- Print-ready quality

GET FULL MANUAL NOW

International 3088, 3288, 3488, 3688 Service Manual

Scan or click anywhere
youfixthis.com

Click anywhere on this page to get the full manual