PREVIEW - YOUFIXTHIS.C

International 574 Tractor Operator's Manual

1084039R1
Reprinted

CASE

Download full manual at youfixthis.com

TECHNICAL PUBLICATIONS AVAILABLE

Your International Harvester Dealer and his factory trained servicemen are best qualified to service your equipment. Up-to-date instructions and adequate special tools are also a part of your Dealer's service facilities.

This Operator's Manual was prepared to instruct you in proper operation and maintenance of your equipment. If you desire additional information you may purchase Service Manuals and/or Parts Catalogs. Additional copies of the Operator's Manual are also available.

Fill out the order blank and forward together with your check or money order in the appropriate amount (U.S. Funds) to:

International Harvester Company

PRINTING AND
DISTRIBUTION SERVICES

807 Blackhawk Drive

Westmont, Illinois 60559

Attention: Cashier

Cut Along This Line

Title	Number	Qty.	Price Each
Operator's Manual			
International 574 Tractor Serial No. 100,000 and below ...	1 084 039 R1		8.40
Parts Catalogs			
International 574 Tractor	TC-138		12.10
4 Cyl. Gasoline or LP Gas	ENG-1		17.30
4 Cyl. Diesel Engine	ENG-4		7.10
Service Manual			
Chassis	GSS-1416-1		25.50
Engine and Fuel System — Diesel, D-239	GSS-1377-H		15.40
Engine and Fuel System — Gasoline, C-200	GSS-1395-J		5.60

Cut Along This Line

Please Print

Name _____

Street Address _____

City _____

State _____

Zip Code

_____ _____

Date **Signed**

Do not send cash or stamps

Prices subject to change without notice.

PREVIEW - YOUFIXTHIS.COM

Download full manual at youfixthis.com

To The Owner

Your local International Harvester dealer is interested in the performance you receive from this tractor. He has factory-trained service men, informed in the latest method of servicing tractors, and modern tools, and original equipment IH service parts which assure proper fit and good performance.

To obtain top performance and assure economical operation the tractor should be inspected, depending on its use, periodically, or at least once a year, by your International Harvester dealer.

Before you operate the tractor study this manual carefully. It has been prepared to help you operate and maintain your tractor with utmost efficiency. New copies may be ordered from your dealer at a nominal price.

When in need of parts, always specify the tractor and engine serial numbers, including prefix and suffix letters. Write these serial numbers in the spaces provided.

CONTENTS

Description	Page No.
CONTENTS	1
INTRODUCTION	2
SAFETY SUGGESTIONS	3
INSTRUMENTS AND CONTROLS	4
BEFORE OPERATING YOUR NEW TRACTOR	5, 6
DRIVING THE TRACTOR	6 to 12
GASOLINE ENGINE AND FUEL SYSTEM	13 to 16
DIESEL ENGINE AND FUEL SYSTEM	17 to 24
BASIC HYDRAULIC SYSTEM WITH POWER STEERING	25
HYDRAULIC CONTROLS FOR THREE-POINT HITCH	26 to 28
THREE-POINT HITCH	31 to 36
AUXILIARY VALVES AND REMOTE CYLINDERS	37 to 39
HITCHING TRAILING EQUIPMENT TO THE TRACTOR	40 to 42
POWER TAKE-OFF	41 to 42
COOLING SYSTEM	43 to 45
AIR CLEANING SYSTEM	46 to 48
ELECTRICAL SYSTEM	49 to 54
MINOR ENGINE SERVICE OPERATIONS	55 to 59
FRONT WHEELS	60, 61
REAR WHEELS	61 to 66
WEIGHTS	66 to 68
PNEUMATIC TIRES	69, 70
BRAKES	71, 72
CLUTCHES (Synchromesh transmission)	73
STORING THE TRACTOR	74, 75
COLD WEATHER PRECAUTIONS	75, 76
TROUBLE SHOOTING	77 to 84
LUBRICATION	86 to 89
LUBRICATION TABLE	90
LUBRICATION GUIDE	91 to 94
PREVENTIVE MAINTENANCE GUIDE	95 to 98
SPECIFICATIONS	99 to 102
OPTIONAL EQUIPMENT	103
INDEX	104 to 108

PREVIEW - YOUFIXTHIS.COM

Download full manual at youfixthis.com

SAFETY SUGGESTIONS

This symbol is used to call your attention to instructions concerning your personal safety. Be sure to observe and follow these instructions.

BEFORE STARTING

1. Don't refuel hot or running engines. Do not smoke while refueling.

2. Keep brakes and clutch in proper adjustment.

3. Reduce tractor tipping hazards by spreading tractor wheels as far as practicable.

4. Do not oil, grease, or service engine while it is running.

5. Do not clean either oil cooler or radiator cores while engine is running.

6. When removing pressure radiator cap while engine is hot, first turn cap to the pressure release point. Let pressure and steam escape.

7. Always carry a fire extinguisher and first aid kit.

8. Put all controls in neutral before starting the engine.

9. Clean dirt, trash, and grease from operator's platform, pedals, steps, and steering wheel.

10. Avoid loose-fitting clothing that could catch in moving parts.

11. Release park brake completely.

DURING OPERATION

12. Reduce speed when traveling on rough roads.

13. Avoid heavily-traveled roads when moving farm equipment.

14. Use red warning flags in daytime... lights at night... when you move equipment on public roads.

15. Set drawbar in lowest position when hitching to a heavy load, especially manure spreaders and two-wheel trailers.

16. Pull only from drawbar; never hitch to axle housing. Shift transmission to neutral and set park brake before dismounting to hitch implements.

17. Keep safety shielding in place when using power take-off.

18. Only the driver should ride on tractor. He should sit on seat or stand on the platform.

19. Keep children away from tractor and equipment.

20. Reduce speed before making a turn or applying brakes.

21. Avoid... sudden starts, excessive speeds and sudden stops when operating on hillside, rough ground, or most off-the-road operations.

22. When moving on highways, or from field to field, lock brake pedals together for simultaneous operation when making a stop.

23. Operate tractor inside a building only when doors are open.

24. Disengage P. T. O. before adjusting or unclogging power-driven machinery.

25. Carefully supervise inexperienced drivers.

26. Don't leave engine running unattended.

AFTER OPERATING

27. Don't dismount while tractor is in motion.

28. Disengage P. T. O. before dismounting.

29. Lower all equipment before leaving tractor.

30. Shut off engine and remove ignition key.

31. Lock the park-brake so tractor will not roll.

PREVIEW - YOUFIXTHIS.COM

Download full manual at youfixthis.com

INSTRUMENTS AND CONTROLS

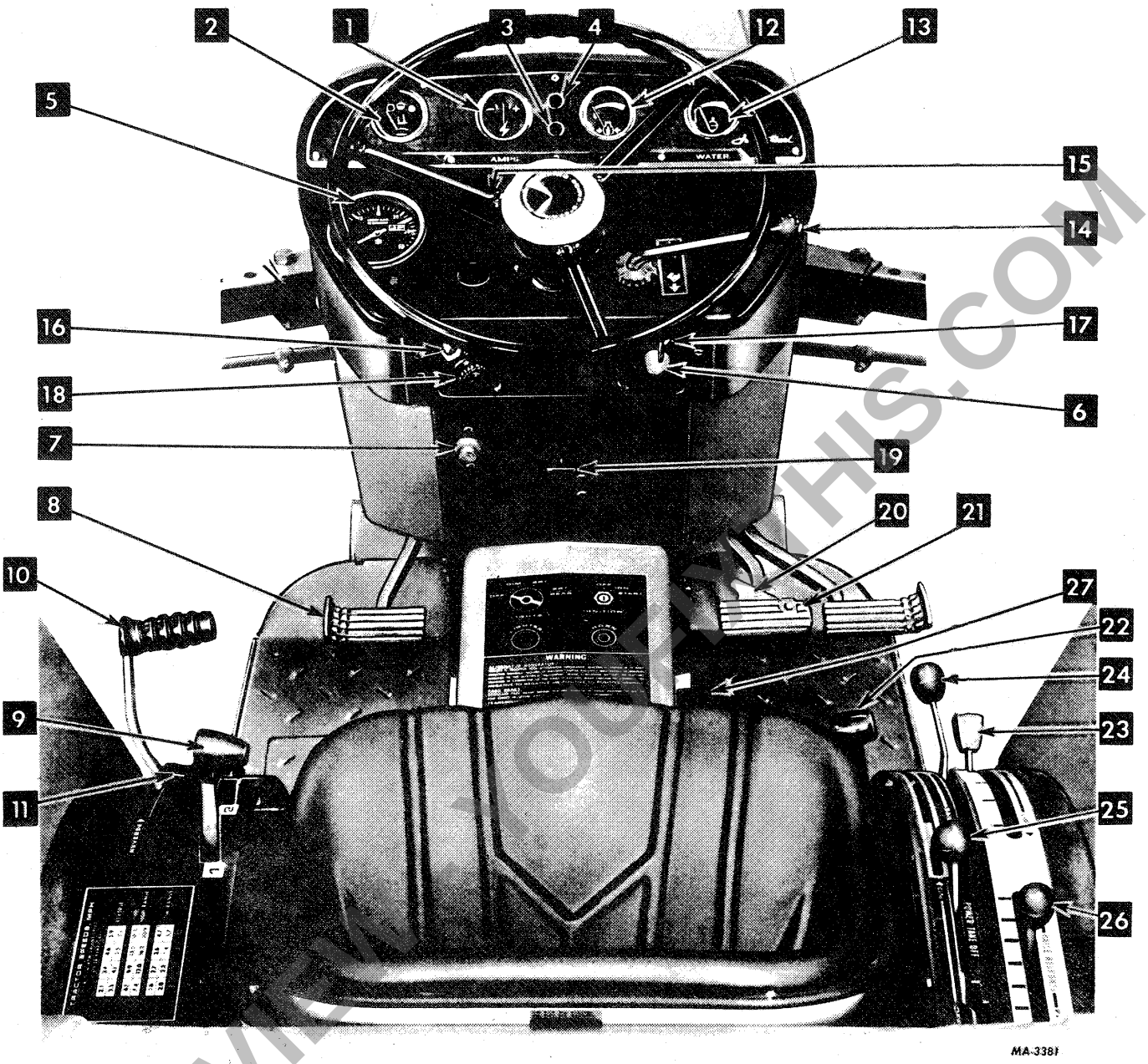

1 - Ammeter (page 52)
2 - Fuel gauge (page 12)
3 - Parking brake warning light (page 72)
4 - Trans. oil pressure tellite (page 52)
5 - Tachometer (page 12)
6 - Horn button (page 4)
7 - Ether start push button (Diesel) (pages 19 to 22)
8 - Clutch pedal (page 73)
9 - Transmission speed lever (page 8)
10 - Transmission range lever (page 8)
11 - Park brake (not seen) (page 10)
12 - Eng. oil pressure gauge (page 15)
13 - Heat indicator (water) (page 43)
14 - Eng. speed control lever (page 59)
15 - Fuse holder (not seen) (page 53)
16 - Lighting switch (page 53)
17 - Key starting switch (page 50)
18 - Cigarette lighter (page 4)
19 - Fuel cont. knob (Diesel) (page 21)
Choke cont. knob (Gas.) (page 14)
20 - Brake pedal latch (page 11)
21 - Brake pedals (page 11)
22 - Auxiliary valve operating levers (page 37)
23 - Draft control lever (pages 27, 28)
24 - Position control lever (pages 26, 27)
25 - Independent power take-off operating lever (page 42)
26 - Raise response lever (pages 28, 29)
27 - Differential lock pedal (pages 11, 12)

Illust. 4
Location of instruments and controls.
(International 574 Tractors) (Synchromesh transmission)

PREVIEW ONLY FIXTHIS.COM

Download full manual at youfixthis.com

STARTING THE ENGINE – Continued

As soon as the engine warms up, push the fuel control knob all the way in. Check the oil pressure gauge and alternator-generator Tellite. Refer to "Electrical System".

If the engine fails to start after following the preceding procedure, see your International Harvester dealer.

AFTER THE ENGINE IS RUNNING

Check the ammeter and the engine oil pressure gauge. Refer to "Electrical System".

Note: The key switch (Illust. 4). must be left in the "ON" position while the engine is running so the engine oil pressure gauge, transmission oil Tellite, and fuel gauge will function.

ENGINE OIL PRESSURE GAUGE

The engine oil pressure gauge is located at the top of the instrument panel (Illust. 4) and is mechanically activated by oil pressure taken from the crankcase oil galley.

This gauge indicates whether lubricating oil is circulating through the engine. The indicator needle should move at least one third of the distance from the left on the white area when the engine is running approximately 100 r.p.m. above slow idle speed. If it does not, stop the engine immediately and investigate the cause of oil pressure failure.

Add oil if necessary.

STOPPING THE ENGINE

To prevent excessive loss of water in the cooling system due to expansion after heavy-load operation at high ambient temperatures, the engine should be run at high idle or at approximately 1500 r.p.m. until the temperature gauge reaches its lower normal position before stopping. To stop the engine, retard the engine speed by pushing the control lever all the way up. Push the fuel control lever down all the way to the "STOP" position. Turn the key switch counterclockwise to the "OFF" position.

CHANGING THE ETHER FLUID CONTAINER

Turn the knurled adjusting screw clockwise until the starting fluid container can be removed from the injector body. Take care not to lose the ether can seal gasket in the injection body if it should come out with the can. See Illust. 22.

Discard the container.

Install the new container between the bail.

Tighten the knurled adjusting screw (turning counterclockwise) and, at the same time, guide the container head into the injector body.

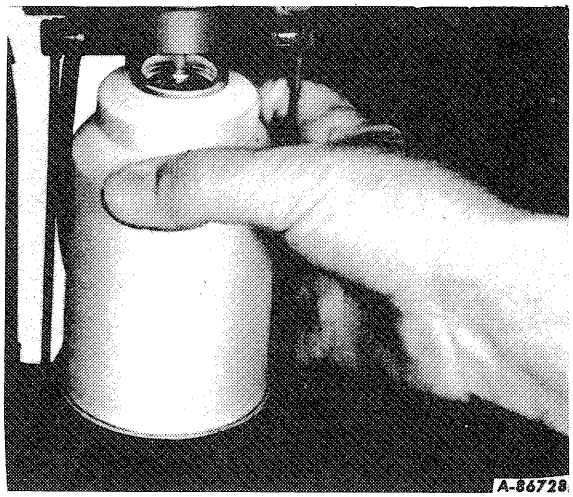

Illust. 22
Removal of ether can.

PREVIEW - YOUFIXTHIS.COM

Download full manual at youfixthis.com

ELECTRICAL SYSTEM

Gasoline Engine Tractors

The electrical system is a negative ground twelve-volt system and consists of an alternator-generator, voltage regulator, cranking motor, lights, lighting switch, twelve volt battery electrical instruments and a distributor and coil unit.

Use the illustrations and wiring diagrams on the following pages as a guide for identifying the various electrical units and for tracing the electrical cables and connections. Be sure all terminals are clean and securely fastened.

Note: Before working on any part of the electrical system, disconnect the battery ground strap from the battery terminal. Do not reconnect it until all electrical work has been completed. This will prevent shorting and causing damage to any of the electrical units.

SPARK PLUGS AND CABLES

Note: Remove all dirt from the base of the spark plug before removing the spark plug.

Remove the spark plugs after every 250 hours of operation for cleaning and checking the gaps between electrodes. A gap of .023-inch should be maintained. When making this adjustment, always bend the outer electrode. Never bend the center electrode, as it may damage the insulator. If the gap between the electrodes is too great, due to improper setting or burning off of the ends, the engine will misfire and be hard to start. **See Illust. 48.**

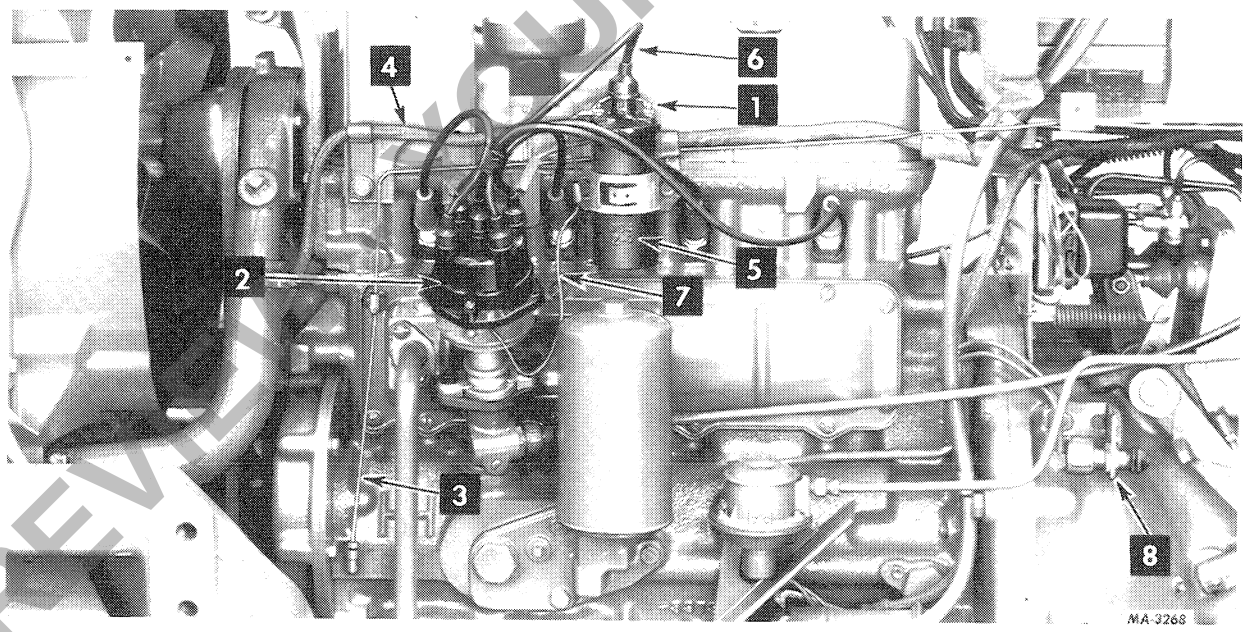

1 - Cable, junction ignition coil positive(+) terminal to solenoid switch "R" terminal
2 - Distributor
3 - Cable, engine oil pressure switch to 2-unit connector
4 - Cable harness
5 - Coil
6 - Cable-coil to distributor (secondary)
7 - Cable-coil to distributor (primary)
8 - Safety starting switch

Illust. 47
Distributor, coil, and cable harness on the left side of the gasoline engine.

PREVIEW YOUFIXTHIS.COM

Download full manual at youfixthis.com

PNEUMATIC TIRES

LOAD CAPACITY PER TIRE AT VARIOUS INFLATION PRESSURES

FRONT TIRES

Tire Size	Ply Rating	Pounds per square inch										
		16	20	24	28	32	36	40	44	48	52	56
		Kilograms per square centimeter										
			1.40	1.68	1.97	2.25	2.53	2.81	3.09	3.38	3.66	3.94
F-2 Tread												
6.00-16	4		760	840	920	1000						
6.00-16	6		760	840	920	1000	1070	1140	1200	1260		
6.50-16	4		850	950	1040	1130						
7.50-16	6		1100	1220	1340	1450	1550	1650				
I-1 Tread												
7.50-16	6		1480	1650	1810	1950						

* The tire load used to select the proper inflation pressure must include any added front end weight or mounted equipment.

Tire Code Marking	Tire Industry Type
F-2	Agricultural
I-1	Rib Implement

REAR TIRES

Tire Size	Ply Rating	Pounds per square inch						
		12	14	16	18	20	22	24
		Kilograms per square centimeter						
		.84	.98	1.12	1.26	1.40	1.50	1.68
R-1 Tread								
12.4-36	6	2110	2310	2500	2680	2850	3010	3170
13.6-28	6		2420	2620	2810	2980	3160	
13.9-36	6		2730	2950	3160	3360		
14.9-28	6		2880	3120	3340	3550		
16.9-24	6			3550	3800			
16.9-26	6			3660	3920			
16.9-28	6			3780	4050			
16.9-30	6			3900	4180			
13.6-38	6		2810	3040	3260	3470		
14.9-24	6		2700	2910	3125			
15.5-38	6		3160	3420	3660			
18.4-26	6			4370	4680	5000		
R-3 Tread								
16.9-24	6			3550	3800			

Tire Code Marking	Tire Industry Type
R-1	Agricultural
R-3	Industrial

PREVIEW - YOUFIXTHIS.COM

Download full manual at youfixthis.com

HYDRAULIC FLUID FILTER

Remove and clean the by-pass valve screen and replace the filter, and cover gasket after the first 10, 100, and 200 hours of operation and every 200 hours of operation thereafter. Clean the screen and replace the filter more frequently when operating under unusual dirt or dust conditions. See "By-pass valve" on page 89.

Also clean the by-pass valve screen and replace the filter whenever the transmission hydraulic fluid is changed.

Fluid filters are not serviced separately. A fluid filter package, consisting of a filter and a fluid filter opening cover gasket is available from your International Harvester dealer.

To avoid delays, keep extra filter element packages on hand so replacement can be made at the proper time.

Procedure

Place a pan under the left side of the tractor below the filter opening cover and remove the filter assembly. Some of the fluid will drain into the pan.

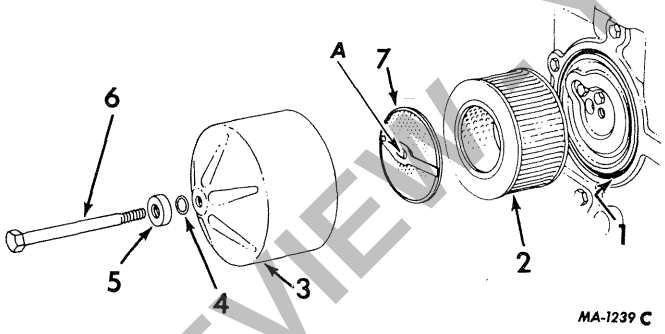

1 - Filter cover gasket
2 - Element
3 - Filter cover
4 - O-ring
5 - Seal retainer
6 - 7/16NC x 5-3/4-inch cap screw
7 - By-pass valve and screen

Illust. 88
Hydraulic fluid filter disassembled.

Remove the filter element and by-pass valve from the cover. Discard the filter element.

Disassemble the cap screw, seal retainer, O-ring and cover.

Remove the used filter cover gasket on multiple control valve flange and O-ring filter cover bolt (under large washer) and discard. Replace with new gasket and O-ring supplied in filter replacement package. Be sure to lubricate both gasket and O-ring with "Hy-Tran" before installation.

Clean the by-pass valve screen with a brush using kerosene or diesel fuel.

Note: Check to make sure the rubber grommet "A" Illust. 88 stays attached to the by-pass valve while passing the cap screw through it.

Assemble by-pass valve and element in cover and insert bolt into multiple control valve flange. Hold filter cover against multiple control valve flange with enough pressure to overcome by-pass spring load. Tighten bolt finger tight while holding cover against multiple control valve flange. During last few turns of the center bolt also rotate filter cover assembly along with bolt. Take care to insure the filter cover is positioned properly in the groove when tightening the bolt. When the filter cover bolt is finger tight use wrench to draw bolt up snug. Do not over tighten. If a torque wrench is available the bolt should be torqued to 70 - 72 foot-pounds.

PREVIEW ONLY YOUFIXTHIS.COM

Download full manual at youfixthis.com

LUBRICATION GUIDE

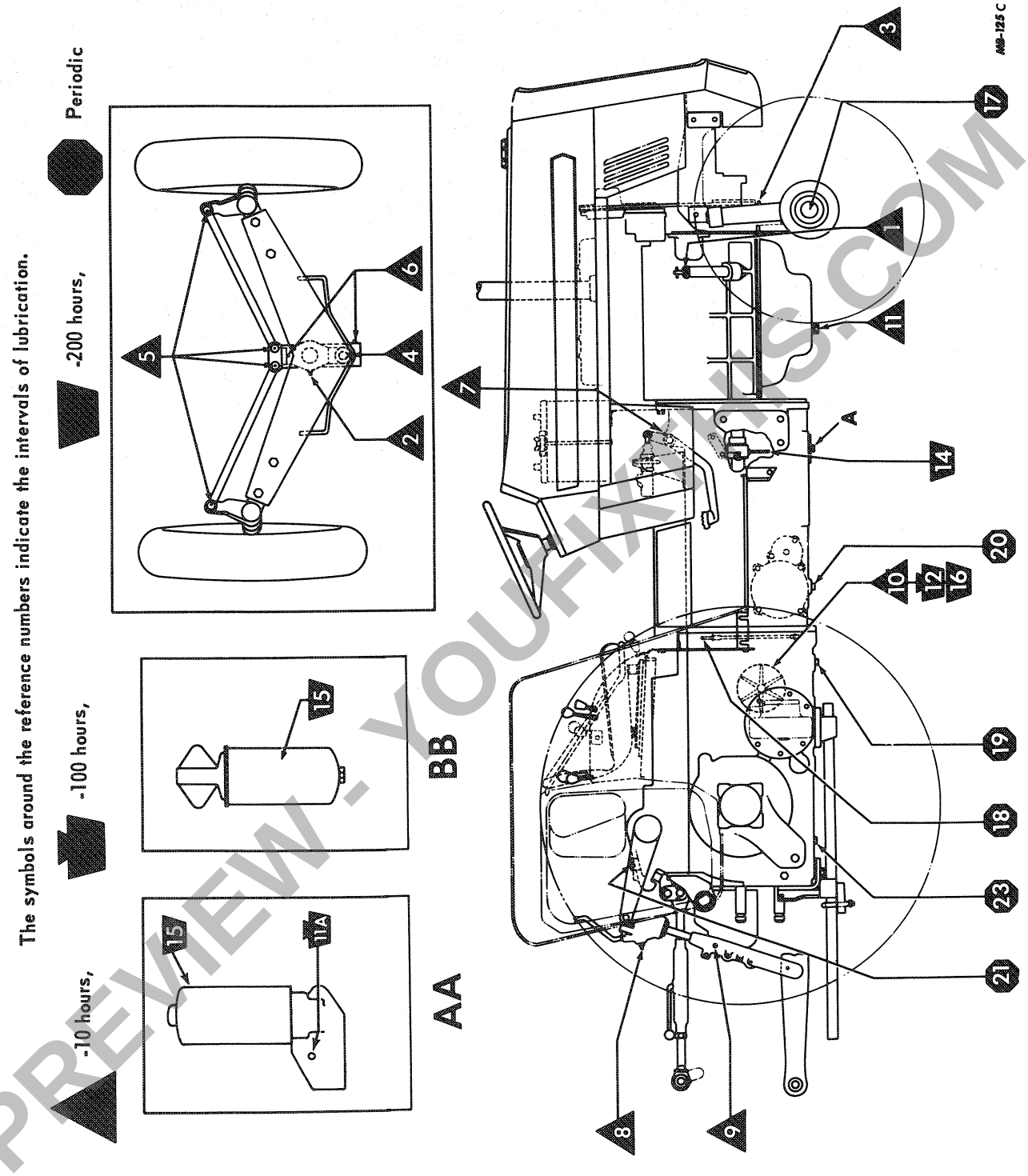

AA-Gasoline - left side BB-Diesel - right side
Illust. 91 - Right side view of tractor.

PREVIEW - YOUFIXTHIS.COM

Download full manual at youfixthis.com

LUBRICATION GUIDE

Key to Lubrication Guide

The symbols shown around the reference numbers in Illust. 91. indicate the intervals of lubrications. Paragraph numbers correspond to reference numbers in the illustrations.

▲ - Daily or After Every 10 Hours of Operation

1. Engine filler bayonet type oil level gauge.

Check the oil (with the engine stopped) and add sufficient new oil to bring it to the "FULL" mark on the bayonet gauge. Do not check the oil level while the engine is operating or operate the engine if the oil level is below the "ADD" mark on the bayonet gauge.

Note: The proper method of checking the oil level with the bayonet-type oil level gauge (1) is: Turn the cross piece on the gauge counterclockwise to release it, remove the gauge from the oil filler tube and wipe it clean. Reinsert the gauge all the way without turning it, then remove the gauge and check the oil level. After checking, and adding oil if necessary, reinsert the gauge all the way, and turn the cross piece clockwise to tighten it.

2. Center steering arm (2).
3. Steering knuckle post (2).
4. Steering cylinder pivot pin (2).
5. Adjustable tie rod (4).
6. Front axle pivot pin (2).
7. Brake pedal

Use IH 251H EP grease or equivalent #2 multi-purpose lithium grease and apply two or three strokes of lubricator, or sufficient grease to flush out the old grease and dirt.

Three-Point Hitch

8. Leveling crank gear box (right side).
9. Leveling screw housing (2).

Use IH 251H EP grease or equivalent #2 multi-purpose lithium grease and apply sufficient lubricant to flush out old grease and dirt.

10. Hydraulic fluid filter.

Note: After the first 10 hours only, remove and clean the filter by-pass valve screen and replace the element as instructed on pages 87 and 88. Change the element at 100 hours, 200 hours, and then every 200 hours of operation thereafter.

⬟ - After Every 100 Hours of Operation

11. Crankcase oil drain
11A. Not used.

Remove the crankcase drain plug and drain all the oil from the crankcase while the engine is warm; then replace the plug and refill with new oil to the "FULL" mark on the oil level gauge. Refer to the "Lubrication Table".

12. Hydraulic fluid filter.

Note: After the first 100 hours only, remove and clean the filter by-pass valve screen and replace the element as instructed on pages 87 and 88. Change the element at 200 hours, and every 200 hours of operation thereafter. See 10 above.

PREVIEW - YOUFIXTHIS.COM

Download full manual at youfixthis.com

PREVENTIVE MAINTENANCE GUIDE

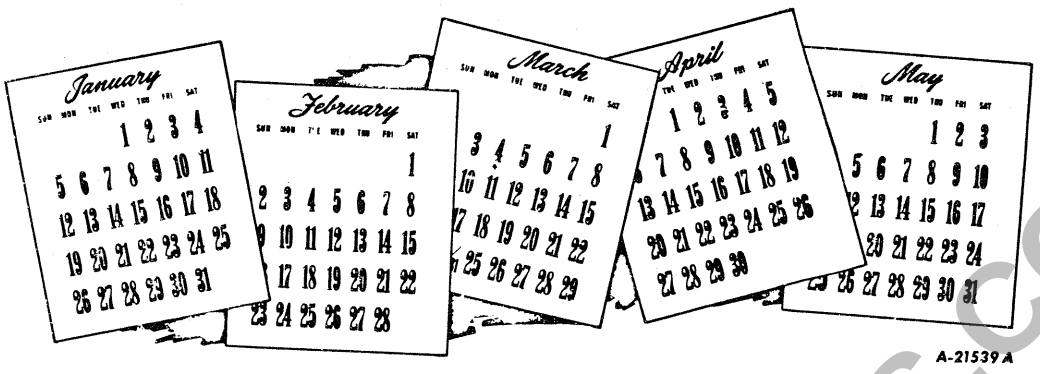

To keep your tractor performing efficiently, it is advisable to systematically inspect the following points at intervals as outlined below.

Before Operating the Tractor

Before operating a new tractor for the first time, be sure to follow the instructions given on pages 5 and 6, also see Lubrication Section on pages 90 to 95.

After the First 10 Hours of Operation

Hydraulic fluid filter	Clean the relief valve screen and replace element. See pages 87 and 88.
Water pump, fan, and alternator-generator belt	Check tension. See page 45.
Hub clamp stud nuts	Check and tighten to proper torque. See pages 61 to 65.

After Every 10 Hours of Operation

Cooling system	Check level of coolant in radiator. See page 43.
Fuel tank water drain cock (Diesel engine)	Drain off water and sediment. See page 24.
Lubrication points	See "Lubrication Guide".
Pneumatic tires	Check pressure. See page 69.
Primary and final fuel filters	Drain off water and sediment. See page 24.
Radiator core and transmission oil cooler	Inspect, clean if necessary. See page 44.

After Every 50 Hours of Operation

Hub clamp stud nuts	Check tightness. See pages 61 to 65.
Water pump, fan and alternator-generator belt	Check tension; replace when necessary. See page 45.

* See your International Harvester dealer for this service.

PREVIEW - YOUFIXTHIS.COM
Download full manual at youfixthis.com

PREVIEW ONLY

You're viewing 12 of 122 pages

The full manual includes:

- All 122 pages, complete
- Searchable PDF (find any keyword)
- No watermarks
- Instant download
- Print-ready quality

GET FULL MANUAL NOW

International Harvester 574 Tractor, International 574 Tractor, C-200, D-239 Operator Manual

Scan or click anywhere
youfixthis.com

Click anywhere on this page to get the full manual