OPERATOR'S MANUAL



ROLLER

JCB116, JCB116D, JCB116DD

EN - 9831/4600 ISSUE 3 - 09/2017

THIS MANUAL SHOULD ALWAYS STAY WITH THE MACHINE

PREVIEW - YOUFIXTHIS.COM

Download full manual at youfixthis.com

Contents **Page No.**

Acronyms Glossary vii

Introduction
About this Manual
Model and Serial Number 1
Using the Manual 1
Left-Hand Side, Right-Hand Side 1
Cab/Canopy 1
Cross References 2
Safety
Safety - Yours and Others 3
Safety Warnings 3
General Safety 4
Clothing and Personal Protective Equipment (PPE) 5

About the Product
Introduction
General 7
Name and Address of the Manufacturer 7
Product Compliance 7
Description
General 8
Intended Use 8
Danger Zone 9
Main Component Locations 10
Product and Component Identification
Machine 12
Engine 12
Operator Protective Structure 13
Safety Labels
General 15
Safety Label Identification 15
Operator Station
Component Locations 17
Interior Switches
Ignition Switch 18
Cab Interior Light 18
Front Window Washer/Wiper 19
Rear Window Washer/Wiper 19
Engine Stop Switch 19
Console Switches
General 20
Road Lights 20
Direction Indicators 20
Hazard Warning Lights 20
Work Lights 21
Front Work Lights 21
Rear Work Lights 21
Drive Mode 21
Park Brake 21

PREVIEW - YOUFIXTHIS.COM

Download full manual at youfixthis.com

Safety

Safety - Yours and Others

All machinery can be hazardous. When a machine is correctly operated and maintained, it is a safe machine to work with. When it is carelessly operated or poorly maintained it can become a danger to you (the operator) and others.

In this manual and on the machine you will find warning messages, read and understand them. They inform you of potential hazards and how to avoid them. If you do not fully understand the warning messages, ask your employer or JCB dealer to explain them.

Safety is not just a matter of responding to the warnings. All the time you are working on or with the machine you must be thinking of what hazards there might be and how to avoid them.

Do not work with the machine until you are sure that you can control it.

Do not start any work until you are sure that you and those around you will be safe.

If you are not sure of anything, about the machine or the work, ask someone who knows. Do not assume anything.

Remember:

- Be careful
- Be alert
- Be safe.

Safety Warnings

In this manual and on the machine, there are safety notices. Each notice starts with a signal word. The signal word meanings are given below.

The signal word 'DANGER' indicates a hazardous situation which, if not avoided, will result in death or serious injury.

The signal word 'WARNING' indicates a hazardous situation which, if not avoided, could result in death or serious injury.

The signal word 'CAUTION' indicates a hazardous situation which, if not avoided, could result in minor or moderate injury.

The signal word 'Notice' indicates a hazardous situation which, if not avoided, could result in machine damage.

The safety alert system (shown) also helps to identify important safety messages in this manual and on the machine. When you see this symbol, be alert, your safety is involved, carefully read the message that follows, and inform other operators.

Figure 2. The safety alert system



PREVIEW - YOUFIXTHIS.COM
Download full manual at youfixthis.com

Introduction
About this Manual

Model and Serial Number

This manual provides information for the following model(s) in the JCB machine range:

Model	From:	To:
JCB116	2492271	2492450
JCB116D	2492451	2492570
JCB116DD	2492271	2492450

Using the Manual

This operator's manual is arranged to give you a good understanding of the machine and its safe operation. It also contains maintenance and technical data.

Read this manual from the front to the back before you use the machine for the first time, even if you have used machines of a similar/same type before as the technical specification, systems and controls of the machine may have changed. Particular attention must be given to all the safety aspects of operating and maintaining the machine.

If there is anything you are not sure about, ask your JCB dealer or employer. Do not guess, you or others could be killed or seriously injured.

The general and specific warnings in this section are repeated throughout the manual. Read all the safety statements regularly, so you do not forget them. Remember that the best operators are the safest operators.

The illustrations in this manual are for guidance only. Where the machines are different, the text and or the illustration will specify.

The manufacturer's policy is one of continuous improvement. The right to change the specification of the machine without notice is reserved. No responsibility will be accepted for discrepancies which may occur between specifications of the machine and the descriptions contained in this manual.

All of the optional equipment included in this manual may not be available in all territories

Left-Hand Side, Right-Hand Side

In this manual, 'left' and 'right' mean your left and right when you are seated correctly in the machine.

Figure 1.

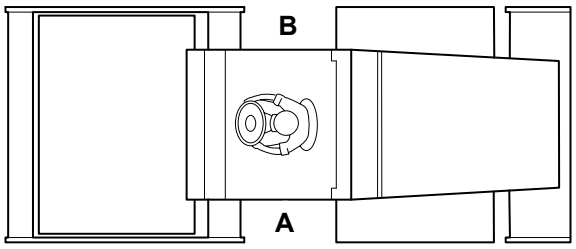

A Left

B Right

Cab/Canopy

This manual frequently makes references to the cab. For example, 'do not operate the machine without an operator's manual in the cab'. These statements also apply to canopy build machines.

PREVIEW - YOUFIXTHIS.COM
Download full manual at youfixthis.com

Main Component Locations

Machine Installed with Canopy

Figure 3.

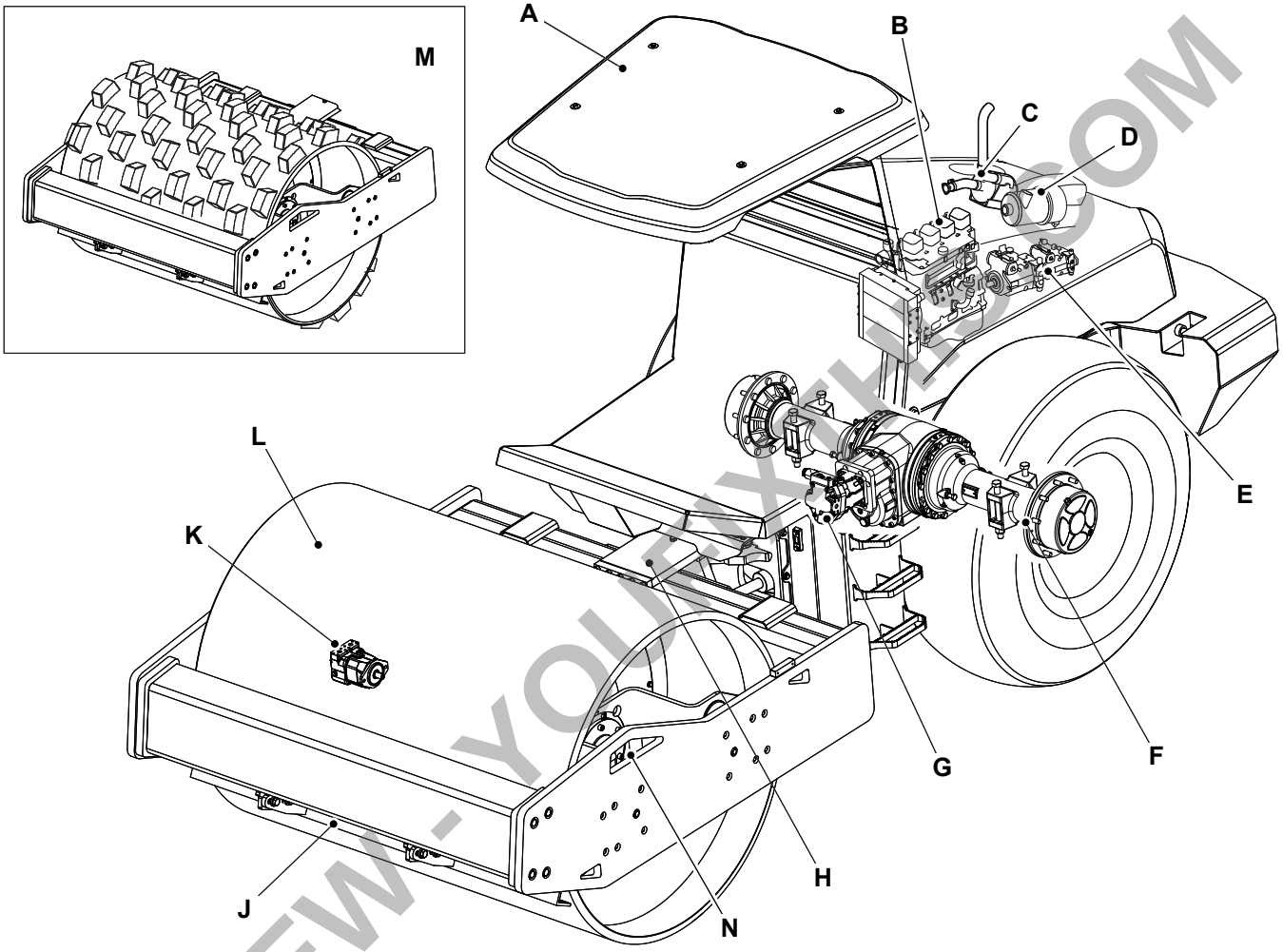

A Canopy
B Engine
C Exhaust
D Air filter
E Hydraulic pumps
F Rear axle
G Axle hydraulic drive motor
H Articulation joint
J Scraper
K Vibration motor
L Smooth drum (standard)
M Tamping foot drum shells (optional)

PREVIEW - YOUFIXTHIS.COM

Download full manual at youfixthis.com

Torque Values

General

Drums Scrapers

Table 29.

Scrapers adjustment fasteners C Refer to: Scraper (Page 139).	366–390N·m
Vulcollan scraper fasteners	185–197N·m
Individual padfoot scraper fasteners F Refer to: Scraper (Page 139).	187–197N·m
Padfoot scraper adjustment fasteners G Refer to: Scraper (Page 139).	366–390N·m

Wheel

Table 30.

Wheel nut	560–600N·m

Padfoot Shells

Table 31.

Segment bolts	640N·m

Retrieval

Table 32.

Bypass screws	40N·m

ROPS/FOPS

Table 33.

Mounting bolts	690N·m

PREVIEW - YOUFIXTHIS.COM

Download full manual at youfixthis.com

Starting the Engine

General

⚠ **Notice:** Do not use ether or other starting fluids to assist cold starting. Using these fluids may result in an explosion causing possible injury and/or damage to the engine.

The engine noise and or tone may be louder than usual when cold. The engine will become quieter when the engine reaches normal operating temperature.

New engines do not require a running-in period. The engine/machine should be used in a normal work cycle immediately, glazing of the piston cylinder bores resulting in excessive oil consumption, could occur if the engine is gently run-in. Under no circumstances should the engine be allowed to idle for extended periods.

If any warning lights fail to go off or come on while the engine is running, stop the engine as soon as it is safe to do so.

Safety Features

The machine is fitted with an operator seat occupancy switch and lever position switch designed to prevent inadvertent activations of the controls. If either of the features malfunction stop using the machine immediately and contact your JCB dealer.

Operator Seat Occupancy Switch (If installed)

This feature prevents the machine from starting if it detects that the operator is not seated. This feature will also stop the engine from running and bring the machine to a safe standstill after 10s when it detects that the operator seat is vacant.

With the ignition on the seat switch LED (Light Emitting Diode) on the instrument panel must illuminate when the seat is vacant and extinguish when it is occupied. Refer to: Instruments (Page 53).

Drive Lever Position Switch

This feature prevents the machine from starting if it detects that the drive lever is not in the park brake position (furthest position away from the operator). Refer to: Transmission Drive Lever (Page 50).

With the ignition on the park brake light on the display illuminates when the lever is in park brake position and extinguishes when it is moved to the neutral position. Refer to: Instruments (Page 53).

Start the Engine

1. Make sure that the machine is ready to start.
   Refer to: Before Starting the Engine (Page 35).
2. Make sure that the articulation lock is in the drive position.
   Refer to: Articulation Lock (Page 48).
3. Make sure there are no blocks under the machine.
4. Make sure that the drive lever is in the neutral position.
5. Make sure that the throttle control is in the idle position.
6. Make sure that the auto-manual switch is in the off position.
7. Turn the ignition key to the on position.
8. Make sure that the following indicator lights on the instrument panel operate correctly: charging current indicator light, engine oil pressure warning light, park brake light and neutral position lights, replace them if they do not illuminate.

PREVIEW - YOUFIXTHIS.COM

Download full manual at youfixthis.com

Fluids, Lubricants and Capacities

General

For: JCB116D ..... Page 163
For: JCB116, JCB116DD ..... Page 163

(For: JCB116D)

Table 25.

Item	Capacity	Fluid/Lubricant	International Specification	JCB Part No.	Container Size[1]
Fuel Tank	300L	Diesel			
Engine - Engine Oil	14.5L	JCB Extreme Performance 5W40 (-30°C (-22°F) to 46°C (115°F)) or	API CH4	4001/2705	20L
		JCB Extreme Performance 15W40 (-15°C (5°F) to 46°C (115°F) deg C)		4001/1805	
Engine - Antifreeze/Coolant	17L	JCB HP Antifreeze/Coolant (50/50 Readymix)		4006/1115	20L
Rear Axle - (JCB)	23.5L[2]	JCB Gear Oil LS Plus		4000/3905	20L
Drum Drive Gearbox	2.2L	JCB Gear Oil HP 90		4000/0301	5L
Hydraulic Fluid[3]	60L	JCB Optimum Performance Hydraulic Fluid 46		4002/2003	200L
Vibration System	3.3L (dry), 3L (refill)	JCB Ultra Performance Gear Oil 150		4000/4901	5L

(1) For information about the different container sizes that are available (and their part numbers), contact your JCB dealer.
(2) Inclusive of hubs.
(3) This is nominal tank capacity. The total hydraulic system capacity depends on the equipment being used. Fill with all cylinders closed. Watch level sight glass when filling.

(For: JCB116, JCB116DD)

Table 26.

Item	Capacity	Fluid/Lubricant	JCB Part No.	Container Size[1]
Fuel Tank	300L	Diesel		
Engine Oil	14.5L	JCB Engine Oil Max 15W40 CI4 Plus	4001/3200	15L
Cooling System	22L	JCB Heavy Duty	229/01233	20L
Cooling Refiling	17L	JCB coolant ready to use (Top-up)	4006/1115	20L
Hydraulic Oil[2]	60L	JCB HVI Hydraulic Oil	229/00024	20L
Hydraulic Oil System	80L	JCB HVI Hydraulic Oil	229/00024	50L
Drum Drive Gearbox Oil	2.2L	JCB HD90 Gear Oil	4000/0300	5L

PREVIEW - YOUFIXTHIS.COM
Download full manual at youfixthis.com

Maintenance Schedules

General

⚠ **WARNING** Maintenance must be done only by suitably qualified and competent persons.

Before doing any maintenance make sure the machine is safe, it must be correctly parked on solid, level ground.

To prevent anyone starting the engine, remove the ignition key. Disconnect the battery when you are not using electrical power. If you do not take these precautions you could be killed or injured.

A badly maintained machine is a danger to the operator and the people working around the operator. Make sure that the regular maintenance and lubrication tasks listed in the service schedules are done to keep the machine in a safe and efficient working condition.

To ensure the correct functioning of the engine and emissions control system all operation and maintenance must be conducted in accordance with the instructions in this manual. Incorrect operation, maintenance or repair of the engine and emissions control system may lead to reduced product life, loss of performance or malfunctions. It is the machine owner's responsibility to ensure maintenance is conducted properly in accordance with the requirements in this manual.

Apart from the daily tasks, the schedules are based on the machine running hours. Keep a regular check on the hourmeter readings to correctly gauge the service intervals. When there is no hourmeter installed, use the calendar equivalents to determine the service intervals.

Do not use a machine which is due for a service. Make sure any defects found during the regular maintenance checks are corrected immediately.

More frequent checks of engine components than the engine manufacturer recommends do not invalidate emissions warranty.

How to Use the Maintenance Schedules

The schedules show the service tasks which must be done and their intervals

The 10h and 50h service tasks can be done by the operator. Details of how to do the service tasks are given in this manual and the schedules include a page reference. The remaining service tasks must be done by your JCB dealer.

The services must be done at either the hourly interval or the calendar equivalent, whichever occurs first.

The intervals given in the schedules must not be exceeded. If the machine is operated under severe conditions (high temperature, dust, water, etc.) shorten the intervals.

Table 10.

○	Service task can be completed by a competent operator. Details of how to complete the service task are given in the Operator's Manual.
□	We recommend that a Service Engineer completes the service task. Details of how to complete the service task are given in the Service Manual.

Maintenance Intervals

Table 11.

Interval (h)	**Calendar Equivalent**
10	Daily
50	Weekly
250	Three months
500	Six months
1000	Yearly
2000	Two years

PREVIEW - YOUFIXTHIS.COM
Download full manual at youfixthis.com

Operation
Introduction

General

The aim of this part of the manual is to guide the operator step-by-step through the task of learning how to operate the machine efficiently and safely. Read the Operation section through from beginning to end.

The operator must always be aware of events happening in or around the machine. Safety must always be the most important factor when you operate the machine.

When you understand the operating controls, gauges and switches, practice using them. Drive the machine in an open space, clear of people. Get to know the 'feel' of the machine and its driving controls.

Do not rush the job of learning, make sure you fully understand everything in the Operation section. Take your time and work efficiently and safely.

Remember:

- Be careful.
- Be alert.
- Be safe.

PREVIEW - YOUFIXTHIS.COM

Download full manual at youfixthis.com

Operator Station

Component Locations

Figure 11.

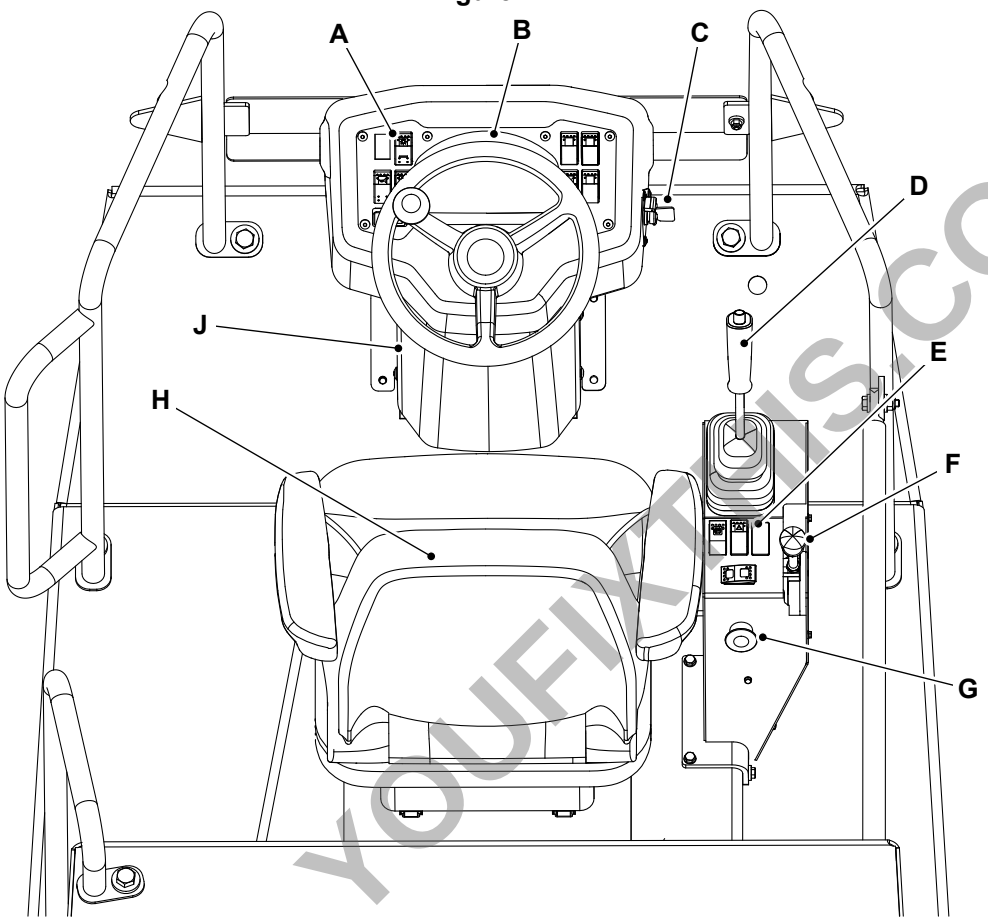

A Front console switchesRefer to: Console Switches (Page 20).
B Instrument panelRefer to: Instrument Panel (Page 53).
C Ignition switchRefer to: Ignition Switch (Page 18).
D Transmission drive leverRefer to: Transmission Drive Lever (Page 50).
E Side console switchesRefer to: Console Switches (Page 20).
F Hand throttleRefer to: Hand Throttle Control (Page 50).
G Engine stop switch Refer to: Engine Stop Switch (Page 19).
H Operator seatRefer to: Operator Seat (Page 36).
J Auxiliary power socket Refer to: Auxiliary Power Socket (Page 65).

PREVIEW - YOUFIXTHIS.COM

Download full manual at youfixthis.com

Figure 46. Third shell segment

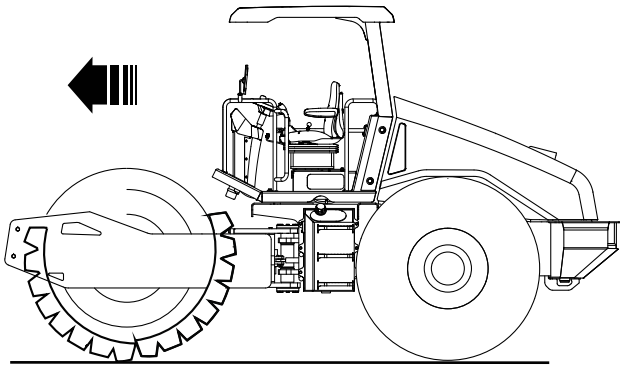

10. Mount the third shell segment with lifting gear.

Figure 47.

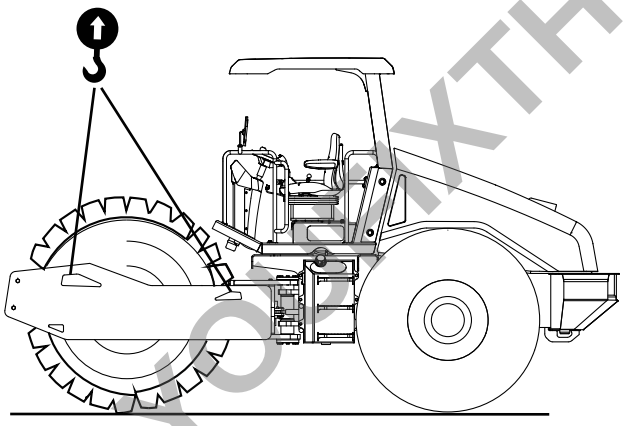

11. Install all segment bolts and tighten evenly to maintain proper spacing of the segments.
12. Remove the temporary spacer prior to tightening.
13. Roll the drum and tighten the segment bolts.
14. Tighten the segment bolts to the correct torque value.
    Refer to: Torque Values (Page 166).
15. Install the pad foot scraper and adjust if necessary.
    Refer to: Drum (Page 139).

PREVIEW - YOUFIXTHIS.COM

Download full manual at youfixthis.com

PREVIEW ONLY

You're viewing 12 of 196 pages

The full manual includes:

- All 196 pages, complete
- Searchable PDF (find any keyword)
- No watermarks
- Instant download
- Print-ready quality

GET FULL MANUAL NOW

JCB JCB116, JCB116D, JCB116DD Operator Manual

Scan or click anywhere
youfixthis.com

Click anywhere on this page to get the full manual