OPERATOR'S MANUAL



COMPACT EXCAVATOR

48 Z-1, 51 R-1

EN - 9831/1200
ISSUE 2 - 09/2016

THIS MANUAL SHOULD ALWAYS STAY WITH THE MACHINE

PREVIEW - YOUFIXTHIS.COM
Download full manual at youfixthis.com

Contents **Page No.**

Acronyms Glossary vii

Introduction
About this Manual
Model and Serial Number 1
Using the Manual 1
Left-Hand Side, Right-Hand Side 1
Cab/Canopy 1
Cross References 2
Location of Manual 2
Safety
Safety - Yours and Others 3
Safety Warnings 3
General Safety 4
Clothing and Personal Protective Equipment (PPE) 5

About the Product
Introduction
General 7
Name and Address of the Manufacturer 7
Product Compliance 7
Description
General 8
Intended Use 8
Log Moving/Object Handling 8
Optional Equipment and Attachments 8
Danger Zone 8
Main Component Locations 9
Product and Component Identification
Machine 10
Engine 10
Operator Protective Structure 11
Safety Labels
General 13
Safety Label Identification 14
Operator Station
Component Locations 17
Console Switches
General 19
Interior Switches
Ignition Switch 21
Cab Interior Light 21
Control Pattern Selector 22

Operation
Introduction
General 23
Operating Safety
General 24
Worksite Safety 26
Risk Assessment 27

PREVIEW - YOUFIXTHIS.COM

Download full manual at youfixthis.com

Safety

Safety - Yours and Others

All machinery can be hazardous. When a machine is correctly operated and maintained, it is a safe machine to work with. When it is carelessly operated or poorly maintained it can become a danger to you (the operator) and others.

In this manual and on the machine you will find warning messages, read and understand them. They inform you of potential hazards and how to avoid them. If you do not fully understand the warning messages, ask your employer or JCB dealer to explain them.

Safety is not just a matter of responding to the warnings. All the time you are working on or with the machine you must be thinking of what hazards there might be and how to avoid them.

Do not work with the machine until you are sure that you can control it.

Do not start any work until you are sure that you and those around you will be safe.

If you are not sure of anything, about the machine or the work, ask someone who knows. Do not assume anything.

Remember:

- Be careful
- Be alert
- Be safe.

Safety Warnings

In this manual and on the machine, there are safety notices. Each notice starts with a signal word. The signal word meanings are given below.

The signal word 'DANGER' indicates a hazardous situation which, if not avoided, will result in death or serious injury.

The signal word 'WARNING' indicates a hazardous situation which, if not avoided, could result in death or serious injury.

The signal word 'CAUTION' indicates a hazardous situation which, if not avoided, could result in minor or moderate injury.

The signal word 'Notice' indicates a hazardous situation which, if not avoided, could result in machine damage.

The safety alert system (shown) also helps to identify important safety messages in this manual and on the machine. When you see this symbol, be alert, your safety is involved, carefully read the message that follows, and inform other operators.

Figure 2. The safety alert system



PREVIEW - YOUFIXTHIS.COM

Download full manual at youfixthis.com

Introduction
About this Manual

Model and Serial Number

This manual provides information for the following model(s) in the JCB machine range:

Model	From:	To:
48 Z-1	1920451	1922450
51 R-1	1922451	1924450

Using the Manual

This operator's manual is arranged to give you a good understanding of the machine and its safe operation. It also contains maintenance and technical data.

Read this manual from the front to the back before you use the machine for the first time, even if you have used machines of a similar/same type before as the technical specification, systems and controls of the machine may have changed. Particular attention must be given to all the safety aspects of operating and maintaining the machine.

If there is anything you are not sure about, ask your JCB dealer or employer. Do not guess, you or others could be killed or seriously injured.

The general and specific warnings in this section are repeated throughout the manual. Read all the safety statements regularly, so you do not forget them. Remember that the best operators are the safest operators.

The illustrations in this manual are for guidance only. Where the machines are different, the text and or the illustration will specify.

The manufacturer's policy is one of continuous improvement. The right to change the specification of the machine without notice is reserved. No responsibility will be accepted for discrepancies which may occur between specifications of the machine and the descriptions contained in this manual.

All of the optional equipment included in this manual may not be available in all territories

Left-Hand Side, Right-Hand Side

In this manual, 'left' and 'right' mean your left and right when you are seated correctly in the machine.

Figure 1.

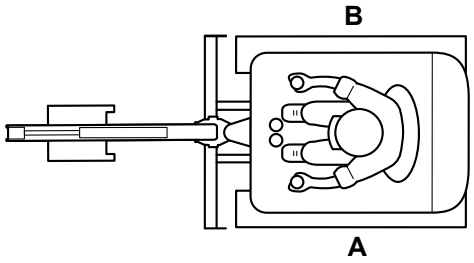

A Left **B** Right

Cab/Canopy

This manual frequently makes references to the cab. For example, 'do not operate the machine without an operator's manual in the cab'. These statements also apply to canopy build machines.

PREVIEW - YOUFIXTHIS.COM
Download full manual at youfixthis.com

Before you do a maintenance task, make the product safe.

Main Component Locations

Figure 3.

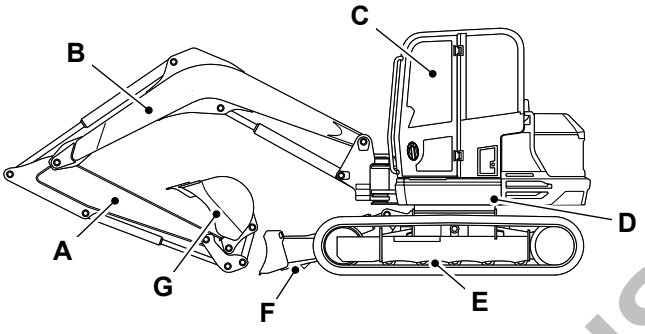

A Dipper (part of the excavator arm)
B Boom (part of the excavator arm)
C Cab (contains the operator station)
D Upper structure
E Undercarriage
F Dozer blade
G Bucket

PREVIEW - YOUFIXTHIS.COM

Download full manual at youfixthis.com

Figure 10.

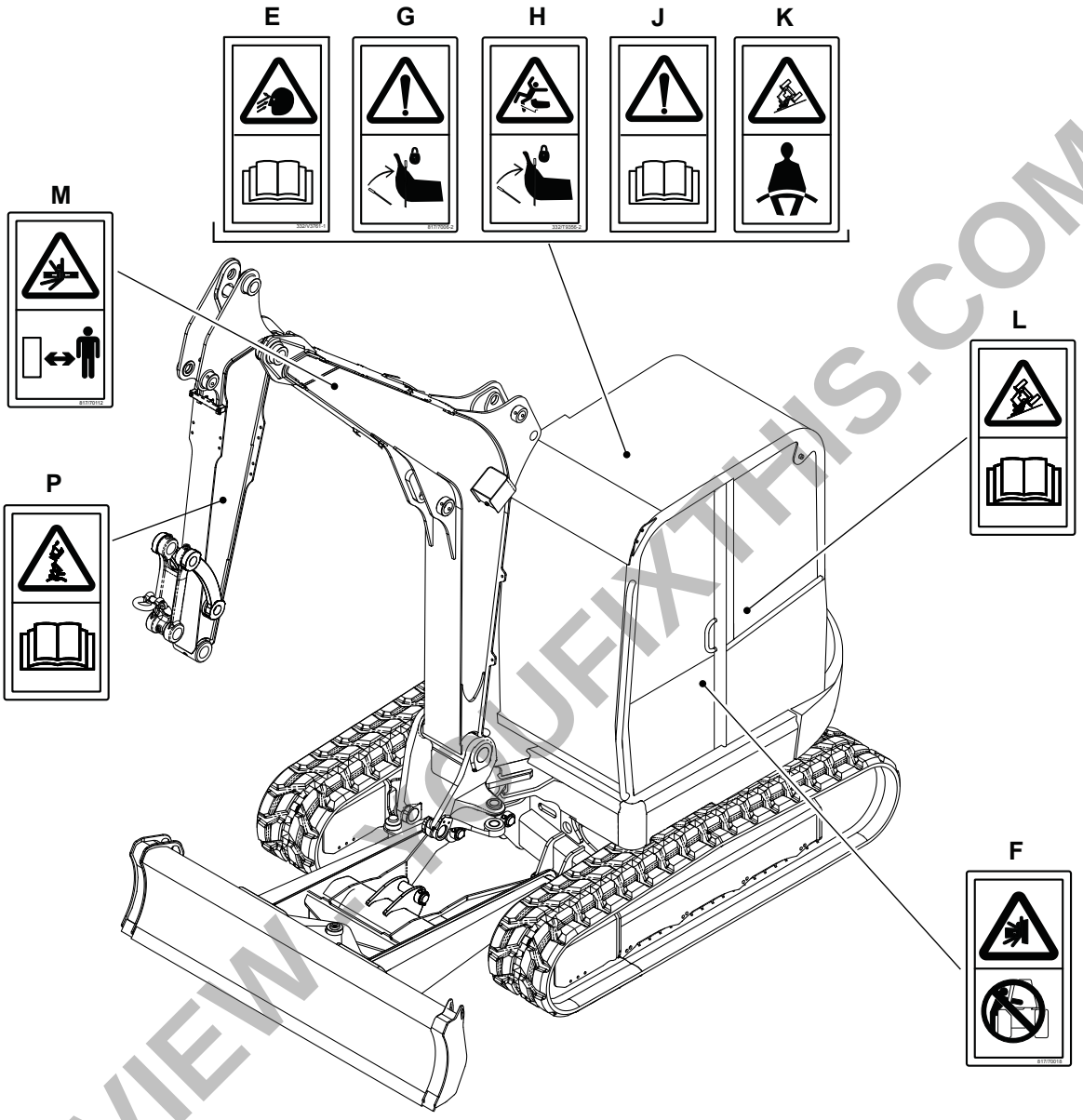

Table 3. Safety Labels

Item	Part No.	Description	Qty.
A	332/P4581	Severing of hands and fingers. Keep clear of/do not reach into rotating parts.	1
B	817/70102	Crushing of fingers or hands. Remove the starter key then read the Service Manual.	1
C	817/70012	Run over hazard. Start the engine from the operator's seat only. Do not short across the terminals.	1
D	817/70106	Strike to whole body (machine swing). Keep a safe distance from the machine.	2(1)
E	332/V3761	Flying debris warning. Read the Operator’s Manual.	1
F	817/70018	Crushing of whole body. Do not operate the controls from outside of the machine.	1
G	817/70006	Unexpected machine movement due to accidental contact with the controls when the hydraulics are not isolated.	1
H	332/T9356	Falling hazard. Lift the lever lock.	1

PREVIEW ONLY - YOUFIXTHIS.COM
Download full manual at youfixthis.com

Fluids, Lubricants and Capacities

General

JCB recommend that you use the JCB lubricants shown as they have been verified by JCB for use on JCB machines. However, you could use other lubricants that are equivalent to the JCB standards and quality or offer the same machine component protection.

Table 24. Fluids, Lubricants and Capacities

Item	Capacity	Fluid/Lubricant	JCB Part Number	Container Size (1)	Specification
	L				
Fuel Tank	76	Diesel Oil	-		
Engine (Oil)	9.1	Above -10°C (14°F): JCB Ultra performance 10W30	4001/3005	20L	API CJ4, ACEA E6-E9, Low SAPS
		JCB Ultra performance 5W30	4001/3105	20L	
Engine Coolant	12	JCB Antifreeze HP/ Coolant/Water	4006/1120	20L	ASTM D3306, ASTM D4985, ASTM D6210, SAE J1034, BS6580 (1992), AFNOR NF R15-601
Track Gearbox (each)	0.8	JCB Engine Oil HP SAE 30 (Not Multigrade)	4001/0305	20L	
Track Idler Wheels	0.8	JCB HD90 Gear Oil	4000/0305	20L	
Track Rollers (top)	0.03	JCB HD90 Gear Oil	4000/0305	20L	
Track Rollers (bottom)	0.08	JCB HD90 Gear Oil	4000/0305	20L	
Hydraulic System	System 100 Tank 55	-20°C (-4.0°F) to 46°C (114.7°F):JCB Hydraulic Fluid OP46	4002/2005	20L	
Slew Ring Bearings	As required	JCB HP Grease	4003/2017	0.4kg	
Slew Ring Gear Teeth	As required	JCB Special Slew Pinion Grease	4003/1619	0.4	
All Other Grease	As required	JCB MPL-EP Grease	4003/1501	0.4	

(1) For information about the different container sizes that are available (and their part numbers), contact your local JCB dealer.

Fuel

⚠ **Notice:** No warranty liability whatsoever will be accepted for failure of fuel injection equipment where the failure is attributed to the quality and grade of the fuel used.

Table 25. Acceptable Fuels

Fuel Specification	Applicable Engines	Service Requirements
EN590 Diesel fuel types - Auto/C0/ C1/C2/C3/C4	All	Obey the usual routine maintenance schedules and procedures.
BS2869 Class A2		
ASTM D975-076 2-D, US DF1, US DF2, US DFA		
JIS K2204 Grades 1, 2, 3 and Special Grade 3		

PREVIEW - YOUFIXTHIS.COM
Download full manual at youfixthis.com

Maintenance Schedules

General

⚠ **WARNING** Maintenance must be done only by suitably qualified and competent persons.

Before doing any maintenance make sure the machine is safe, it must be correctly parked on solid, level ground.

To prevent anyone starting the engine, remove the ignition key. Disconnect the battery when you are not using electrical power. If you do not take these precautions you could be killed or injured.

A badly maintained machine is a danger to the operator and the people working around the operator. Make sure that the regular maintenance and lubrication tasks listed in the service schedules are done to keep the machine in a safe and efficient working condition.

Apart from the daily tasks, the schedules are based on the machine running hours. Keep a regular check on the hourmeter readings to correctly gauge the service intervals. When there is no hourmeter installed, use the calendar equivalents to determine the service intervals.

Do not use a machine which is due for a service. Make sure any defects found during the regular maintenance checks are corrected immediately.

More frequent checks of engine components than the engine manufacturer recommends do not invalidate emissions warranty.

How to Use the Maintenance Schedules

The schedules show the service tasks which must be done and their intervals.

The services must be done at either the hourly interval or the calendar equivalent, whichever occurs first.

The intervals given in the schedules must not be exceeded. If the machine is operated under severe conditions (high temperature, dust, water, etc.) shorten the intervals.

Table 12.

O	Service task can be completed by a competent operator. Details of how to complete the service task are given in the Operator's Manual.
□	We recommend that a Service Engineer completes the service task. Details of how to complete the service task are given in the Service Manual.

Maintenance Intervals

Table 13.

Interval (h)	Calendar Equivalent
10	Daily
50	Weekly
500	Six months
1000	Yearly
2000	Two years

Pre-start Cold Checks, Service Points and Fluid Levels

Table 14.

Component	Task	10	50	500	1,000	2,000
Engine						
Oil level	Check	O	O	□	□	□
Oil and Filter	Replace			□	□	□

PREVIEW - YOUFIXTHIS.COM
Download full manual at youfixthis.com

Starting the Engine

General

⚠ **WARNING** Thoroughly warm the hydraulic oil before operating the excavator services. Before selecting boom up, check there are no overhead obstructions or electric power cables.

CAUTION Do not use ether or other starting fluids to assist cold starting. Using these fluids may result in an explosion causing possible injury and/or damage to the engine.

The engine noise may be louder or the idle speed may be faster than usual when cold. The engine will become quieter when the engine reaches normal operating temperature.

1. Make sure that the machine is ready to start.
   Refer to: Operation > Before Starting the Engine (Page 39).
2. If the machine has an immobiliser then you must disarm the immobiliser before you can start the engine.
   Refer to: Operation > Starting the Engine > Immobiliser (Page 47).
3. Make sure the left arm rest is in the raised position.
   Refer to: Operation > Safety Equipment > Control Lock (Page 55).
4. Move the hand throttle control knob to the minimum position.
5. Turn the ignition key to position 'I'. Engine pre-heat symbol will appear on the instrument panel. Wait until pre-heat symbol goes off.
   Refer to: Operation > Instruments > Instrument Panel (Page 58).
6. Turn the ignition key further to position 'III' and hold it there until the engine starts.
   Duration: 30s
   Refer to: About the Product > Interior Switches > Ignition Switch (Page 21).
7. If the engine does not start, return the ignition key to the 0 position. Allow the starter motor to cool for at least two minutes before repeating steps from 4 to 6.

   Notice: *If the oil pressure low light does not go out within 15s of the engine starting, stop the engine immediately to avoid engine damage. Do not start the engine until the fault has been rectified.*
8. When the engine has started, check that all the warning lights have gone off. Do not race the engine until the oil pressure warning light has gone off.
9. If any warning lights fail to go off, or come on while the engine is running, stop the engine as soon as it is safe to do so.
10. Warm the engine and hydraulics.
    Refer to: Operation > Starting the Engine > Warming Up (Page 51).

Immobiliser

(if installed)

If your machine has an immobiliser system installed, then your JCB dealer should enable the system as part of the standard machine Installation. If you prefer that the system is not enabled, then you must tell your JCB dealer. Your JCB dealer can enable the system at a later date. Machines with immobilisers installed should always be parked as per the instructions in the operators manual.

Introduction

Before attempting to disarm the immobiliser check that the machine is ready to start and that you have your four digit PIN (Product Identification Number) code available.

PREVIEW - YOUFIXTHIS.COM
Download full manual at youfixthis.com

Torque Values

General

Table 28.

Item	Torque
	N·m
FOPS (Falling Object Protective Structure) bolts	74
ROPS (Roll-Over Protective Structure) (cab mounts) bolts	184
Track plate bolts	74
Track tensioner cover plate bolts	43

PREVIEW - YOUFIXTHIS.COM

Download full manual at youfixthis.com

Instruments

General

Indicators for the engine and related systems are mounted in the instrument cluster in the right hand console.

Instrument Panel

Front Display

The gauges, warning and indicator lamps are grouped together on the instrument cluster. When a warning lamp comes on, an alarm will sound.

Figure 39.

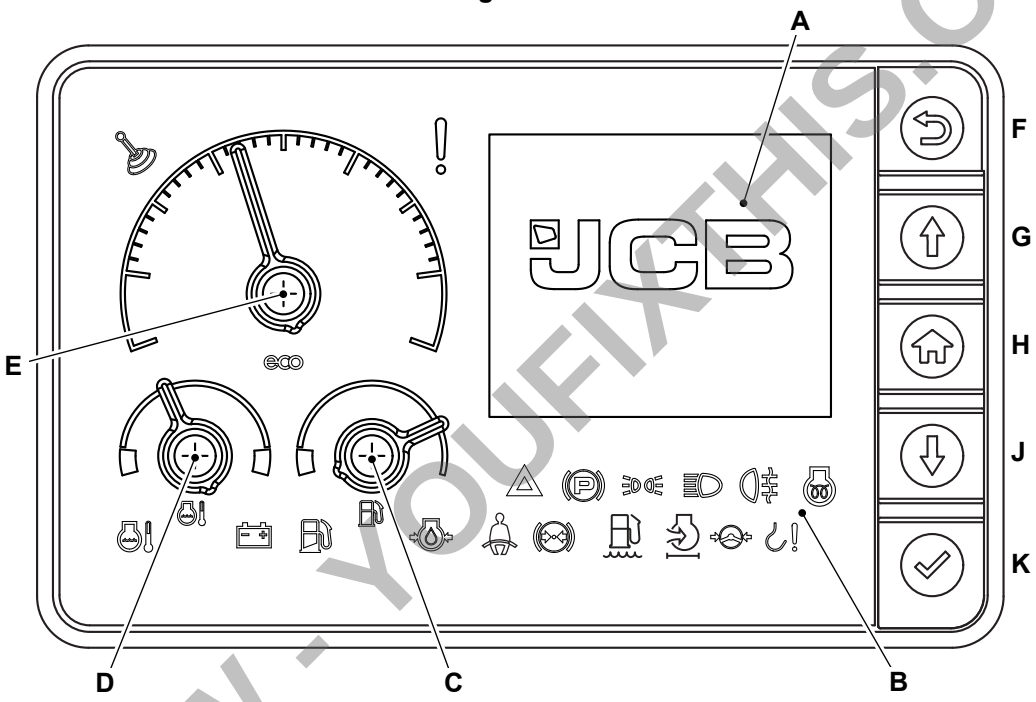

A LCD (Liquid Crystal Display) screen
B Warning and indicator lamps
C Fuel level gauge
D Coolant temperature gauge
E Engine speed
F Back button
G Up button
H Home button
J Down button
K Select button

The LCD shows the live machine information to the operator.

Fuel level gauge: The needle position shows the current level of fuel in the tank. Do not let the tank run dry, or air can enter the fuel system.

Coolant temperature gauge: The needle position shows the current temperature of the engine coolant. Do not let the needle rise into the red danger zone of the gauge.

Engine speed: The needle position shows the current speed of the engine.

PREVIEW - YOUFIXTHIS.COM

Download full manual at youfixthis.com

Console Switches

General

Figure 12.

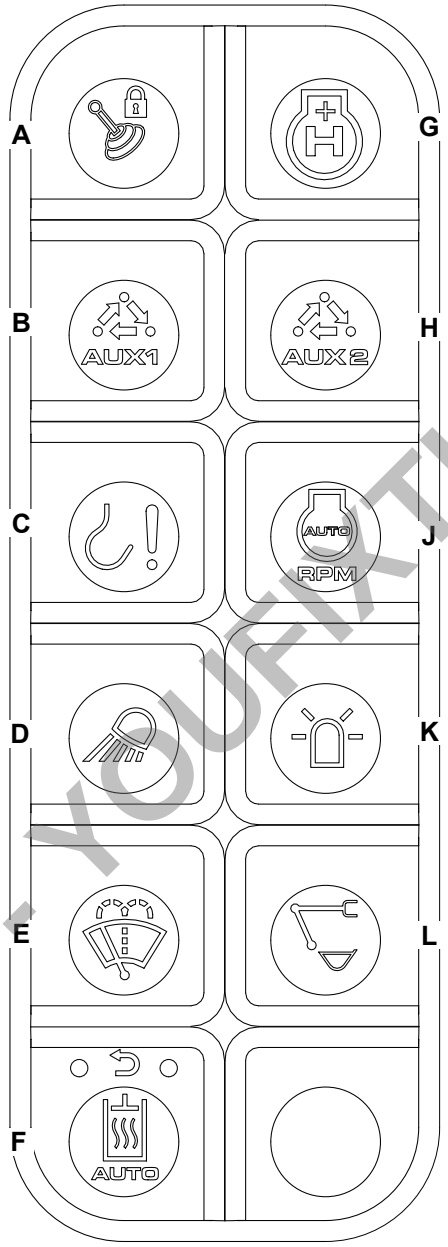

Table 4.

A	Control isolation solenoid on/ off switch	LED (Light Emitting Diode) illumination: Hydraulics active
B	Aux 1 (high flow) selection switch	Mode: Single acting, Double acting system 1 or 2. No LED illumination.
C	Lift overload switch	LED illumination: Buzzer silenced
D	Worklights on/off switch	LED illumination: 1= Front on, 2= Rear on
E	Wiper/washer on	Push to change wiper function (Intermittent /on/off). Hold to operate washer. LED Illumination: 1= Intermittent wiper, 2= On wiper, 1 & 2 = Washer active
F	Auto-hydraulic warming switch	LED illumination: Auto warming on
G	H+ mode selection switch	LED illumination: H+ Mode active

PREVIEW - YOUFIXTHIS.COM
Download full manual at youfixthis.com

PREVIEW ONLY

You're viewing 12 of 218 pages

The full manual includes:

- All 218 pages, complete
- Searchable PDF (find any keyword)
- No watermarks
- Instant download
- Print-ready quality

GET FULL MANUAL NOW

JCB 48 Z-1, 51 R-1 Operator Manual

Scan or click anywhere
youfixthis.com

Click anywhere on this page to get the full manual