Service Manual

Micro, Micro Plus, 8008, 8010

Section 1 - General Information

Section 2 - Care and Safety

Section 3 - Routine Maintenance

Section A - Attachments

Section B - Body and Framework

Section C - Electrics

Section D - Controls

Section E - Hydraulics

Section F - Transmission

Section J - Tracks

Section K - Engine



PREVIEW - YOUFIXTHIS.COM

Publication No.
9803/9310-5



Copyright © 2004 JCB SERVICE. All rights reserved. No part of this publication may be reproduced, stored in a retrieval system, or transmitted in any form or by any other means, electronic, mechanical, photocopying or otherwise, without prior permission from JCB SERVICE.

Issued by JCB Technical Publications, JCB Aftermarket Training, Woodseat, Rocester, Staffordshire, ST14 5BW, England. Tel +44 1889 591300 Fax +44 1889 591400

World Class
Customer Support

Download full manual at youfixthis.com

Contents **Page No.**

Introduction
About this Manual 1-1
Machine Model and Serial Number 1-1
Using the Service Manual 1-1
Section Numbering 1-1
Left Side, Right Side 1-2
Cab/Canopy 1-2
Cross References 1-2

Introduction
Identifying Your Machine 1-3
Machine Identification Plate 1-3
Component Identification Plates 1-4

Torque Settings
Zinc Plated Fasteners and Dacromet Fasteners 1-5
Introduction 1-5
Bolts and Screws 1-5
Hydraulic Connections 1-9
'O' Ring Face Seal System 1-9
'Torque Stop' Hose System 1-12

Consumables
Sealing and Retaining Compounds 1-13

Terms and Definitions
Colour Coding 1-15
Hydraulic Schematic Colour Codes 1-15

PREVIEW - YOUFIXTHIS.COM

Download full manual at youfixthis.com

Safety Check List

P11-1009_3

Safety - Yours and Others

INT-1-3-1_3

All machinery can be hazardous. When a machine is correctly operated and properly maintained, it is a safe machine to work with. But when it is carelessly operated or poorly maintained it can become a danger to you (the operator) and others.

In this manual and on the machine you will find warning messages. Read and understand them. They tell you of potential hazards and how to avoid them. If you do not fully understand the warning messages, ask your employer or JCB distributor to explain them.

But safety is not just a matter of responding to the warnings. All the time you are working on or with the machine you must be thinking what hazards there might be and how to avoid them.

Do not work with the machine until you are sure that you can control it.

Do not start any job until you are sure that you and those around you will be safe.

If you are unsure of anything, about the machine or the job, ask someone who knows. Do not assume anything.

Remember

BE CAREFUL
BE ALERT
BE SAFE

General Safety

T1-043

⚠ WARNING

To operate the machine safely you must know the machine and have the skill to use it. You must abide by all relevant laws, health and safety regulations that apply to the country you are operating in. The Operator Manual instructs you on the machine, its controls and its safe operation; it is not a training manual. If you are a new operator, get yourself trained in the skills of using a machine before trying to work with it. If you don't, you will not do your job well, and you will be a danger to yourself and others.

INT-1-4-1

⚠ WARNING

Care and Alertness

All the time you are working with or on the machine, take care and stay alert. Always be careful. Always be alert for hazards.

INT-1-3-5

⚠ WARNING

Clothing

You can be injured if you do not wear the proper clothing. Loose clothing can get caught in the machinery. Wear protective clothing to suit the job. Examples of protective clothing are: a hard hat, safety shoes, safety glasses, a well fitting overall, ear-protectors and industrial gloves. Keep cuffs fastened. Do not wear a necktie or scarf. Keep long hair restrained. Remove rings, watches and personal jewellery.

INT-1-3-6_2

⚠ WARNING

Alcohol and Drugs

It is extremely dangerous to operate machinery when under the influence of alcohol or drugs. Do not consume alcoholic drinks or take drugs before or while operating the machine or attachments. Be aware of medicines which can cause drowsiness.

INT-1-3-9_2

PREVIEW - YOUFIXTHIS.COM

Download full manual at youfixthis.com

Introduction

Identifying Your Machine

Machine Identification Plate

Your machine has an identification plate mounted as shown. The Product Identification Number (PIN), weight, engine power, year of manufacture and serial number of the machine are shown on the plate.

Note: *The machine model and build specification is indicated by the PIN. Refer to* ***Typical Product Identification Number (PIN)****.*

If the engine is replaced by a new one, the serial number on the identification plate will be wrong. Either get a replacement identification plate from your JCB Dealer or simply remove the old number. This will prevent the wrong unit number being quoted when replacement parts are ordered.

The machine and engine serial numbers can help identify exactly the type of equipment you have.

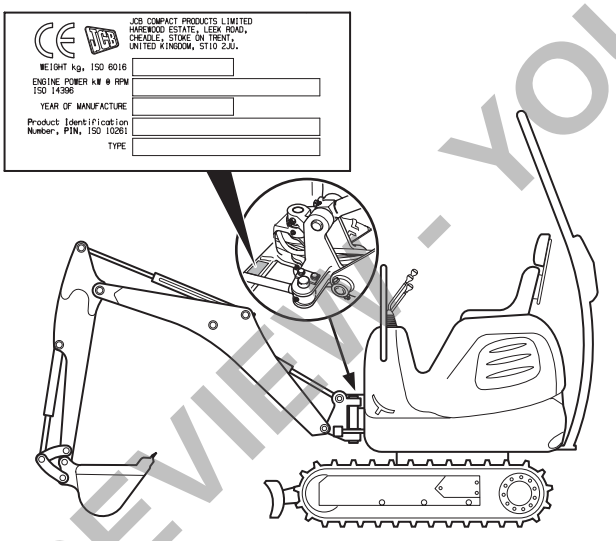

T018860-2

Fig 1.

Typical Vehicle identification number (VIN)

Code	A	B	C	D	E
Example	**SLP**	**800**	**2**	**E**	**M1006000**

A	World Manufacturer Identification	SLP = JCB
B	Machine Model	800 = 800

C Year of Manufacture

R = 1994	X = 1999	4 = 2004
S = 1995	Y = 2000	5 = 2005
T = 1996	1 = 2001	6 = 2006
V = 1997	2 = 2002	7 = 2007
W = 1998	3 = 2003	8 = 2008

D	Manufacturer's Location	
E	Machine Serial Number	**M1006000**

Typical Product Identification Number (PIN)

JCB	08008	C	01234567
1	**2**	**3**	**4**

1 World Manufacturer Identification (3 Digits)

JCB = UK Build

2 Machine Type and Model (5 Digits)

08008 = 8008

3 Check Letter (1 Digit)

The Check Letter is used to verify the authenticity of the machine's PIN.

4 Machine Serial Number (8 Digits)

Each machine has a unique serial number.

PREVIEW - YOUFIXTHIS.COM

Download full manual at youfixthis.com

Zinc Plated Fasteners and Dacromet Fasteners

Table 2. Torque Settings - UNF Grade 'S' Fasteners

Bolt Size		Hexagon (A/F)	Condition 1			Condition 2		
in.	mm	in.	Nm	kgf m	lbf ft	Nm	kgf m	lbf ft
1/4	6.3	7/16	11.2	1.1	8.3	10.0	1.0	7.4
5/16	7.9	1/2	22.3	2.3	16.4	20.0	2.0	14.7
3/8	9.5	9/16	40.0	4.1	29.5	36.0	3.7	26.5
7/16	11.1	5/8	64.0	6.5	47.2	57.0	5.8	42.0
1/2	12.7	3/4	98.00	10.0	72.3	88.0	9.0	64.9
9/16	14.3	13/16	140.0	14.3	103.2	126.0	12.8	92.9
5/8	15.9	15/16	196.0	20.0	144.6	177.0	18.0	130.5
3/4	19.0	1 1/8	343.0	35.0	253.0	309.0	31.5	227.9
7/8	22.2	1 15/16	547.0	55.8	403.4	492.0	50.2	362.9
1	25.4	1 1/2	814.0	83.0	600.4	732.0	74.6	539.9
1 1/8	31.7	1 7/8	1181.0	120.4	871.1	1063.0	108.4	784.0
1 1/4	38.1	2 1/4	1646.0	167.8	1214.0	1481.0	151.0	1092.3

Table 3. Torque Settings - Metric Grade 8.8 Fasteners

Bolt Size		Hexagon (A/F)	Condition 1			Condition 2		
ISO Metric Thread	mm	mm	Nm	kgf m	lbf ft	Nm	kgf m	lbf ft
M5	5	8	5.8	0.6	4.3	5.2	0.5	3.8
M6	6	10	9.9	1.0	7.3	9.0	0.9	6.6
M8	8	13	24.0	2.4	17.7	22.0	2.2	16.2
M10	10	17	47.0	4.8	34.7	43.0	4.4	31.7
M12	12	19	83.0	8.5	61.2	74.0	7.5	54.6
M16	16	24	205.0	20.9	151.2	184.0	18.8	135.7
M20	20	30	400.0	40.8	295.0	360.0	36.7	265.5
M24	24	36	690.0	70.4	508.9	621.0	63.3	458.0
M30	30	46	1372.0	139.9	1011.9	1235.0	125.9	910.9
M36	36	55	2399.0	244.6	1769.4	2159.0	220.0	1592.4

PREVIEW - YOUFIXTHIS.COM

Download full manual at youfixthis.com

Fluids, Lubricants and Capacities

Table 1.

Item	Capacity Litres (Gal)	Fluid / Lubricant	International Specification
Fuel Tank	14.6 (3.2)	Diesel	⇨ *Fuels (🗋 3-13)*
Engine (Oil)	4.9 (1.07)	JCB 15W/40 Multigrade above -10°C (above 14°F)	MIL-L-46152B, API CD/SE MIL-L-2104D
		5W/20 -10°C to -25°C (14°F to -13°F)	API CC/SE or API CD/SE
Engine Coolant	4.5 (0.99)	JCB Universal Antifreeze/Water ⇨ *Coolant Mixtures (🗋 3-12)*	ASTM D3306-74
Track Gearbox (each)	0.3 (0.07)	JCB SAE 30 Engine Oil (Not Multigrade)	API CD/SF, MIL-L-46152, MIL-L-2104D
Track Idler Wheels	Sealed		
Track Rollers (bottom)	Sealed		
Hydraulic System Hydraulic Tank	21 (4.62) 16 (3.52)	See below Up to 30°C (86°F) JCB Hydraulic Fluid 46 Over 30°C (86°F)	
Slew Ring Bearings		JCB MPL Grease	Lithium based no 2 consistency
Gear Teeth		JCB Slew Pinion Grease	
All Other Grease Points		JCB MPL Grease	Lithium based no 2 consistency

PREVIEW - YOUFIXTHIS.COM

Download full manual at youfixthis.com

Pre-start Cold Checks, Service Points and Fluid Levels

	Operation	10	50	500	1000	2000
ENGINE						
Oil Level	- Check	☐	☐	☐	☐	☐
Oil and Filter	- Change			☐	☐	☐
Air Cleaner Element (Dusty Conditions only)	- Change			☐	☐	☐
Air Cleaner Outer Element	- Change				☐	☐
Air Cleaner Hose Security	- Check and Adjust		☐	☐	☐	☐
Air Filter Dust Valve	- Check and Clean			☐	☐	☐
Fuel Injectors(1)	- Clean and Test					☐
Coolant Quality/Level	- Check	☐	☐	☐	☐	☐
Coolant	- Change					☐
Fuel Lift Pump	- Clean			☐	☐	☐
Fuel Sedimenter	- Drain and Clean		☐	☐	☐	☐
Fuel Filter/Sedimenter Element	- Change			☐	☐	☐
Primary Fuel Filter	- Check			☐	☐	☐
Fuel Pre Filter	- Check			☐	☐	☐
Fan Belt Tension/Condition	- Check and Adjust		☐	☐	☐	☐
Valve Clearances(1)	- Check and Adjust				☐	☐
Cylinder Head Bolts for Tightness	- Check and Adjust			☐	☐	☐
Engine Mounting Bolts for Tightness	- Check and Adjust			☐	☐	☐
Exhaust System Security	- Check and Adjust			☐	☐	☐
Radiator	- Clean and Check	☐	☐	☐	☐	☐
TRANSMISSION						
Security of Mounting Bolts and Nuts						
- Track Wheel Motor to Undercarriage Bolts	- Check			☐	☐	☐
- Drive Sprocket Bolts	- Check			☐	☐	☐
- Slew Gearbox Bolts	- Check				☐	☐
Track Gearbox Oil	- Change			☐	☐	☐
HYDRAULICS						
Oil Level	- Check	☐	☐	☐	☐	☐
Oil	Change					☐

PREVIEW - YOUFIXTHIS.COM

Download full manual at youfixthis.com

Hydraulic System

General Fault Diagnosis

Before you do out these checks, make sure that where applicable:-

1 The correct hydraulic fluid is used and the system filled to the correct level.

2 The hydraulic fluid, filter and suction strainer are clean.

3 There are no visible leaks in the system.

4 The engine maximum speed and condition is as specification.

5 Hydraulic pressures for each service are correct to specification

If possible the machine should be operated to identify the fault and to set the systems to their normal working temperature.

After the initial checks are completed, continue as follows:-

A - If all the hydraulic services are at fault start at check 1.

B - If tracking services only are at fault start at check 12.

C - If slew service only is at fault start at check 14.

Check		Action	
1	Is the fault in all services or one only?	ALL:	Check 2
		ONE:	Check 5
2	Are the hydraulics inoperative or lacking in power?	INOPERATIVE: Check 4	
		POOR PERFORMANCE: Check 3	
3	Is the pump operating correctly?	YES:	Check MRV's
		NO:	Check 4
4	Is the pump noisy in operation?	YES:	Purge air from pump casing
		NO:	Check 5
5	Is the pump drive broken?	YES:	Renew
		NO:	Check 6
6	Is one service only down on pressure?	NO:	Check 7
7	Is the control valve spool sticking?	YES:	Overhaul valve block section
		NO:	Check 8

PREVIEW - YOUFIXTHIS.COM

Download full manual at youfixthis.com

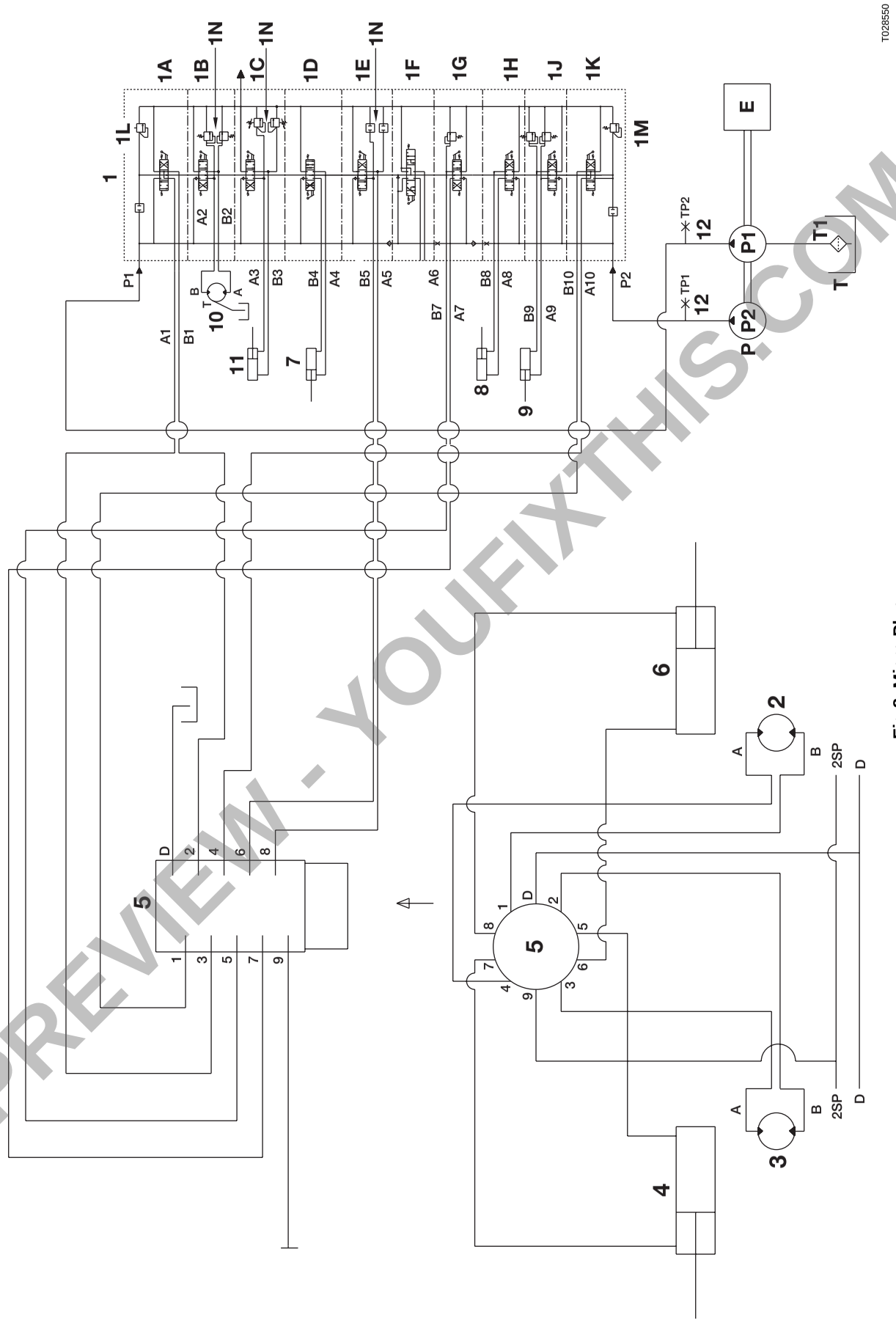

Fig 8. Micro Plus

PREVIEW - YOUFIXTHIS.COM

Download full manual at youfixthis.com

Circuit Diagrams

Introduction to Hydraulic Schematic Symbols

TE-001

General (Basic and Functional Symbols)

Complex hydraulic components and circuits can be described to the engineer by using graphical symbols. The following pages illustrate and give a brief description for some of the more common symbols used.

There are many symbols in use and it would be impossible to include them all here. However it should be noted that most are only variations or refinements on the basic principles explained here. If more detailed information is required you are recommended to obtain a copy of BS2917 or IS01219.

Once familiar with the symbols, the engineer can use hydraulic circuit diagrams as an aid to fault finding. It will be possible to see the complete hydraulic circuit and decipher the relationship between hydraulic components.

Table 1. General

	Spring
	Flow restriction affected by viscosity
	Direction of flow
	Indication of rotation
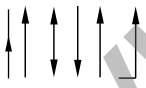	Indication of direction and paths of flow
	Variable control

Table 2. Rams

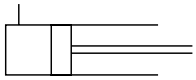	Single acting
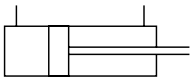	Double acting
	Double ended
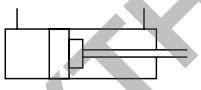	Double acting with damping at rod area end

Table 3. Pumps and Motors

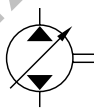	Variable capacity pump two directions of flow
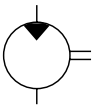	Fixed capacity motor one direction of flow
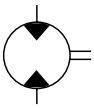	Fixed capacity motor two directions of flow
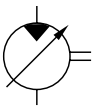	Variable capacity motor one direction of flow
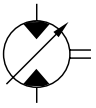	Variable capacity motor two directions of flow

PREVIEW - YOUFIXTHIS.COM

Download full manual at youfixthis.com

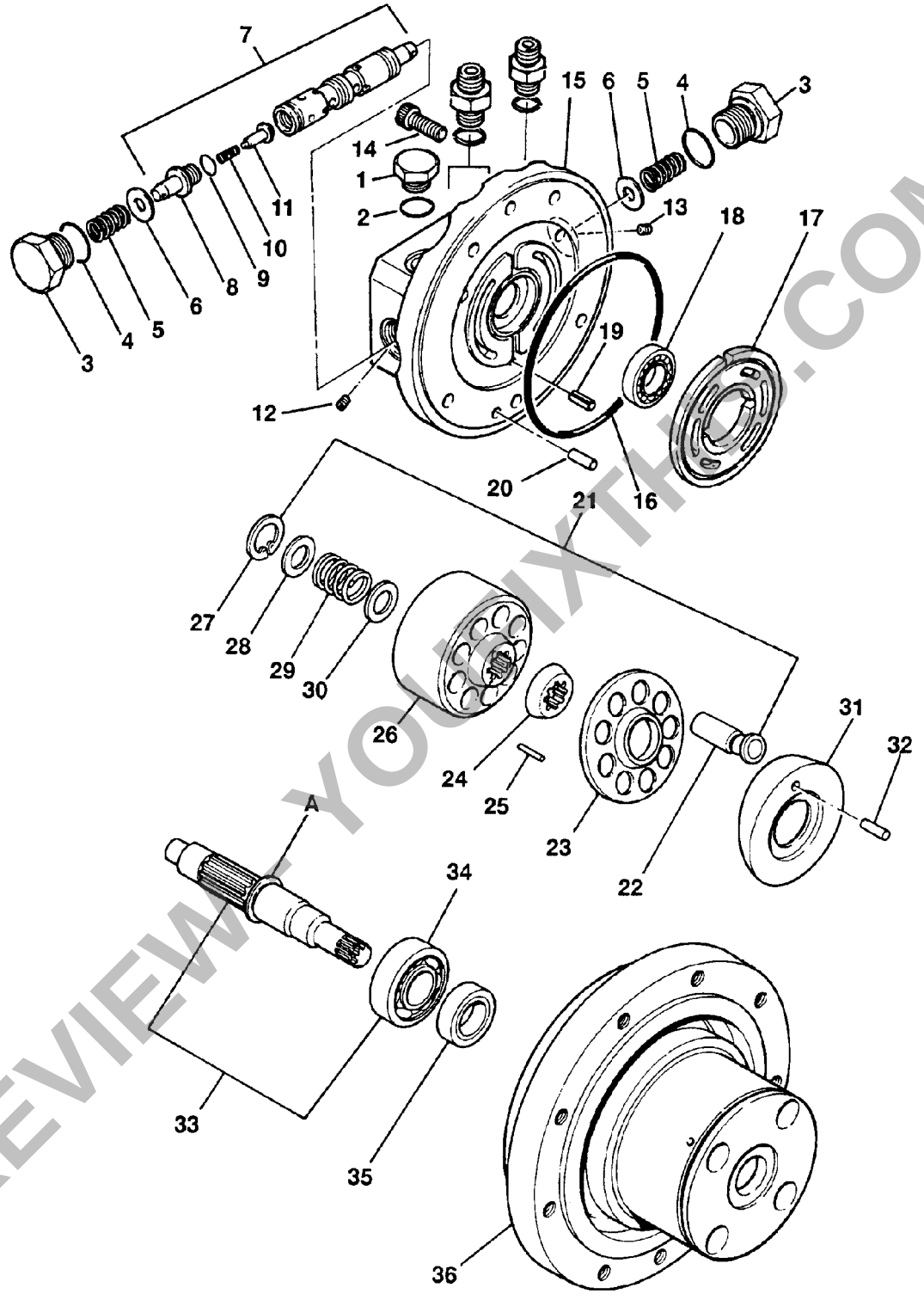

h13231-1

Fig 1.

PREVIEW - YOUFIXTHIS.COM

Download full manual at youfixthis.com

Prepare the Machine for Maintenance

Introduction

P11-3001

⚠ WARNING

Maintenance must be done only by suitably qualified and competent persons.

Before doing any maintenance make sure the machine is safe, it should be correctly parked on level ground.

To prevent anyone starting the engine, remove the starter key. Disconnect the battery when you are not using electrical power. If you do not take these precautions you could be killed or injured.

8-3-1-1

Make the machine safe before you start a maintenance procedure.

Unless a maintenance procedure instructs you differently, you must lower the Excavator. Refer to ***How to Make the Machine Safe (Excavator Lowered)***.

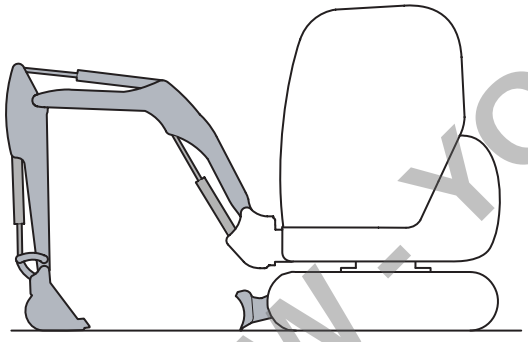

717260-4

Fig 1.

How to Make the Machine Safe (Excavator Lowered)

Important: *Unless a maintenance procedure instructs you differently, you must lower the Excavator.*

1 Park the machine on level, solid ground.

If necessary, refer to ***Stopping and Parking the Machine*** in the Operator Manual.

2 Lower the dozer.

3 Lower the excavator so the attachment is flat on the ground.

4 Stop the engine and remove the starter key.

5 Disconnect the battery to prevent accidental operation of the engine.

PREVIEW - YOUFIXTHIS.COM

Download full manual at youfixthis.com

Technical Data from Machine No. 1148300

General Data - Micro, Micro Plus and 8010CTS

Model	403C-11
Type	3 cylinder in-line, naturally aspirated, water cooled diesel
Swept Volume	1131 cm^2 (69 in^3)
Bore (nominal)	77 mm (3.03 in)
Stroke	81 mm (3.19 in)
Firing Order	1,2,3
Power Output	13.4 kW (18 hp) @ 2200 revs/min
Valve Clearance - Cold - Inlet and Exhaust	0.2 mm (0.0078 in)
Compression Ratio	23: 1
Compression Pressure - Normal	29.4 bar (29.9 kgf/cm^2, 426 lbf/in^2)
Compression Pressure - Required Repair	24.5 bar (24.9 kgf/cm^2, 355 lbf/in^2)
Maximum Variation Between Cylinders	3.4 bar (3.5 kgf/cm^2, 50 lbf/in^2)
Injection Timing / Injection Pump	23 +/- 1º B.T.D.C.
Oil Capacity	4.9 litres (1.07 UK gallons)
Oil Pressure	3 - 5 bar (3.1 - 5.1 kgf/cm^2, 44 - 72 lbf/in^2)
Weight (dry)	87 kg (192 lb)
Idling Speed	850 +/- 25 rev/min
Maximum No-load Speed	2420 +/- 15 rev/min

Torque Settings

	Nm	kgf/m	lbf/ft
Cylinder Head Bolts	51	5.2	37.6
Rocker Cover Bolts	14	1.4	10.3
Sump Drain Plug	35	3.5	25.8
Exhaust Manifold Bolts	25	2.5	18.4
Flywheel to Crankshaft Bolts	74	7.4	54.5
Atomiser Bolts	64	6.4	47.2
Glowplug	18	1.8	13.2
Crankshaft Carrier Bolts	27	2.7	19.9
Connecting Rod Nuts	52	5.2	38.3

Note: *For further details of the engine refer to Engine Service Manual 9806/2190.*

PREVIEW - YOUFIXTHIS.COM

Download full manual at youfixthis.com

Controls General

Access to the Control Mechanisms

Introduction

The control levers and pedals control the machine's movement and its hydraulic functions. Adjustable rods. connect the spools of the hydraulic control valve to their operating levers (or pedals). (See Section E -Hydraulics).

The engine speed is controlled by a lever which is connected by a cable to the throttle control in the engine.

Gaining Access

Lift the bonnet to get limited access to the control mechanisms, but for complete access remove the front cowl.

Removing the Cowl

1 Stop the engine, operate the controls to vent the hydraulic pressure.

2 Lift the engine cover.

3 **Micro, Micro Plus and 8010CTS:** Remove the hand rail (refer to Body and Framework).

Micro 8008 and 8008CTS: Remove the four screws **B** (two either side) that attach the cowl.

4 Remove the four screws **A** (one at each corner) which attach the instrument panel to the cowl.

5 To remove the cowl, carefully move it forward away from the machine.

Note: *To remove the instrument panel, disconnect the switch and indicator connections, remove the control lever knobs, then carefully lift the panel move the lever gaiters up the control rods until they are released.*

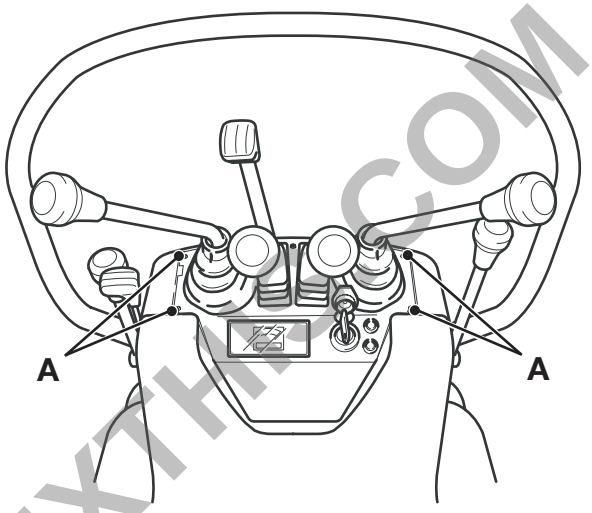

864810-15

Fig 1. Micro, Micro Plus and 8010CTS

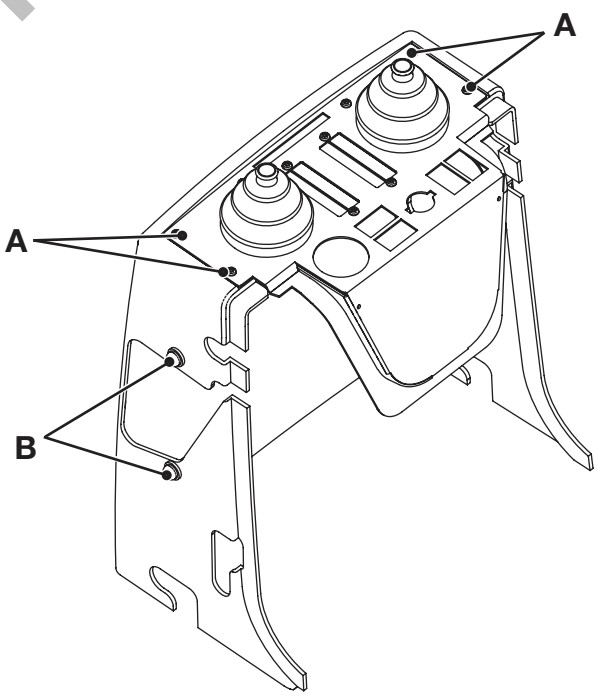

791253-1

Fig 2. Micro 8008 and 8008CTS

PREVIEW - YOUFIXTHIS.COM

Download full manual at youfixthis.com

Auxiliary Hydraulics

Single Acting Auxiliary Hydraulics

Introduction

Standard machines are have a single acting hydraulic circuit to use with the JCB Hammermaster 60 Hydraulic Breaker and other applicable single-acting hydraulic attachments. Attachments with double acting hydraulics, for example JCB Augers, must have additional (optional) pipework installed ⇨ ***Double Acting Auxiliary Hydraulics (A-10)***.

Note: *If you try to use an attachment with the incorrect hydraulic circuit, the attachment will not operate correctly and its working life will be reduced.*

Optional Single Acting Auxiliary Pipework

The Single Acting Auxiliary Pipework **A** attached to the boom, has quick release couplings and is available as an option. ⇨ ***Fig 1. (A-7)***.

Installation instructions are supplied with each kit. These instructions must be followed.

⚠ WARNING

Hydraulic Pressure

Hydraulic fluid at system pressure can injure you. Before connecting or removing any hydraulic hose, residual hydraulic pressure trapped in the service hose line must be vented. Make sure the hose service line has been vented before connecting or removing hoses. Make sure the engine cannot be started while the hoses are open.

INT-3-1-11_2

Note: *Take care when you install the hoses **B** around the kingpost **C** and boom pivot **D**. Read the instructions supplied with the kit.*

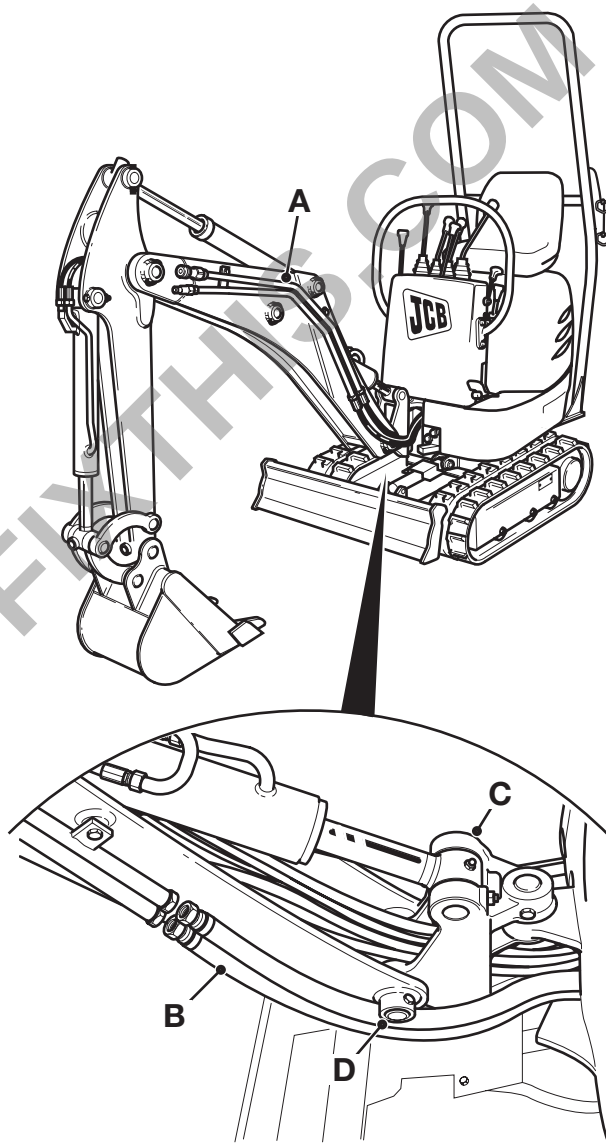

Fig 1.

PREVIEW - YOUFIXTHIS.COM

Download full manual at youfixthis.com

Operation

Note: *Before an attachment is operated, read and understand the appropriate Operator's Manual.*

The pedal **A** operates the attachment, which should be swung down into the operating position before use. ⇒ *Fig 6. (A-12)*.

Push down on the toe or heel end of the pedal to get the required direction for the correct tool operation.

Release the pressure on the pedal to stop the attachment.

Put the pedal up into the stowage position when not in use.

⚠ WARNING

Fluid Under Pressure

Fine jets of fluid at high pressure can penetrate the skin. Keep face and hands well clear of fluid under pressure and wear protective glasses and gloves. Hold a piece of cardboard close to suspected leaks and then inspect the cardboard for signs of fluid. If fluid penetrates your skin, get medical help immediately.

INT-3-1-10_3

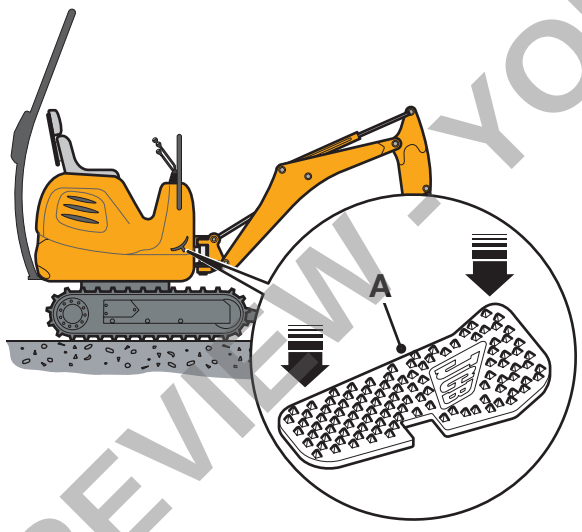

A402902-2

Fig 6.

PREVIEW - YOUFIXTHIS.COM

Download full manual at youfixthis.com

Boom

When the control lever is operated, the spool **1** is moved proportionally against the force of the centring spring **3** to direct the fluid through the service lines **A** and **B** directly to the hydraulic ram **5**. ⇨ *Fig 12. (E-21)*.

The illustration shows the central lands of the spool blocking the neutral circuit. The oil from the pump inlet goes into the pressure feed gallery **P** and opens the load hold check valve **4**. The oil from the hydraulic ram goes into the exhaust gallery **T**.

During operation the auxiliary relief valves **2** protects the service lines **A** and **B** from over-pressure conditions Refer to ⇨ *Auxiliary Relief Valve (ARV) (E-24)*.

When the control lever is released the force of the centring spring **3** returns the spool to the central neutral position. The service lines **A** and **B** to the hydraulic ram are dead-ended by the lands on the spool.

The speed that the ram extends or retracts is proportional to the spool displacement. When the spool is moved in the opposite direction the ram direction is reversed.

For a complete description of the load hold check valve, refer to ⇨ *Load Hold Check Valve (E-22)*.

Component Key

A	Service line
B	Service line
P	Pressure feed (parallel gallery)
T	Exhaust (parallel gallery)
1	Spool
2	ARV
3	Centring spring
4	Load hold check valve
5	Boom ram

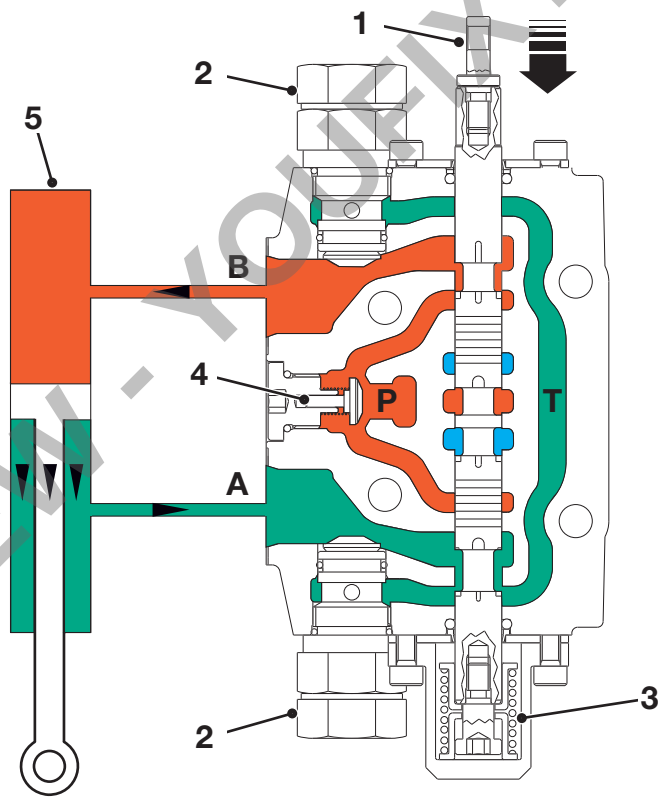

A403150-1

Fig 12.

PREVIEW - YOUFIXTHIS.COM

Download full manual at youfixthis.com

PREVIEW ONLY

You're viewing 17 of 305 pages

The full manual includes:

- All 305 pages, complete
- Searchable PDF (find any keyword)
- No watermarks
- Instant download
- Print-ready quality

GET FULL MANUAL NOW

JCB Micro, Micro Plus, 8008, 8010, Micro Tier 3, Micro Plus Tier 3, 8008CTS, 8010CTS Service Manual

Scan or click anywhere
youfixthis.com

Click anywhere on this page to get the full manual