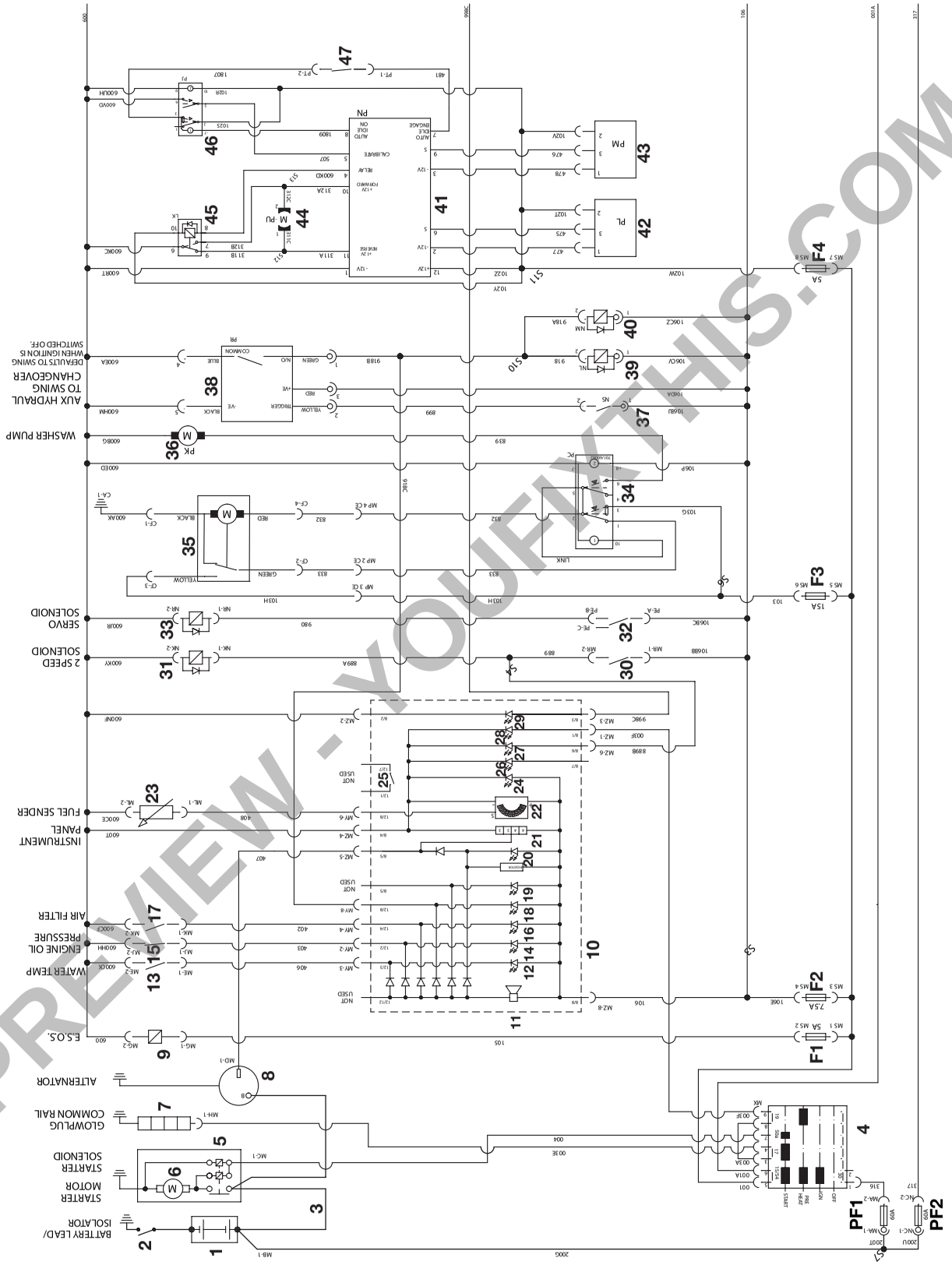

Fig 1.

PREVIEW - YOUFIXTHIS.COM

Download full manual at youfixthis.com

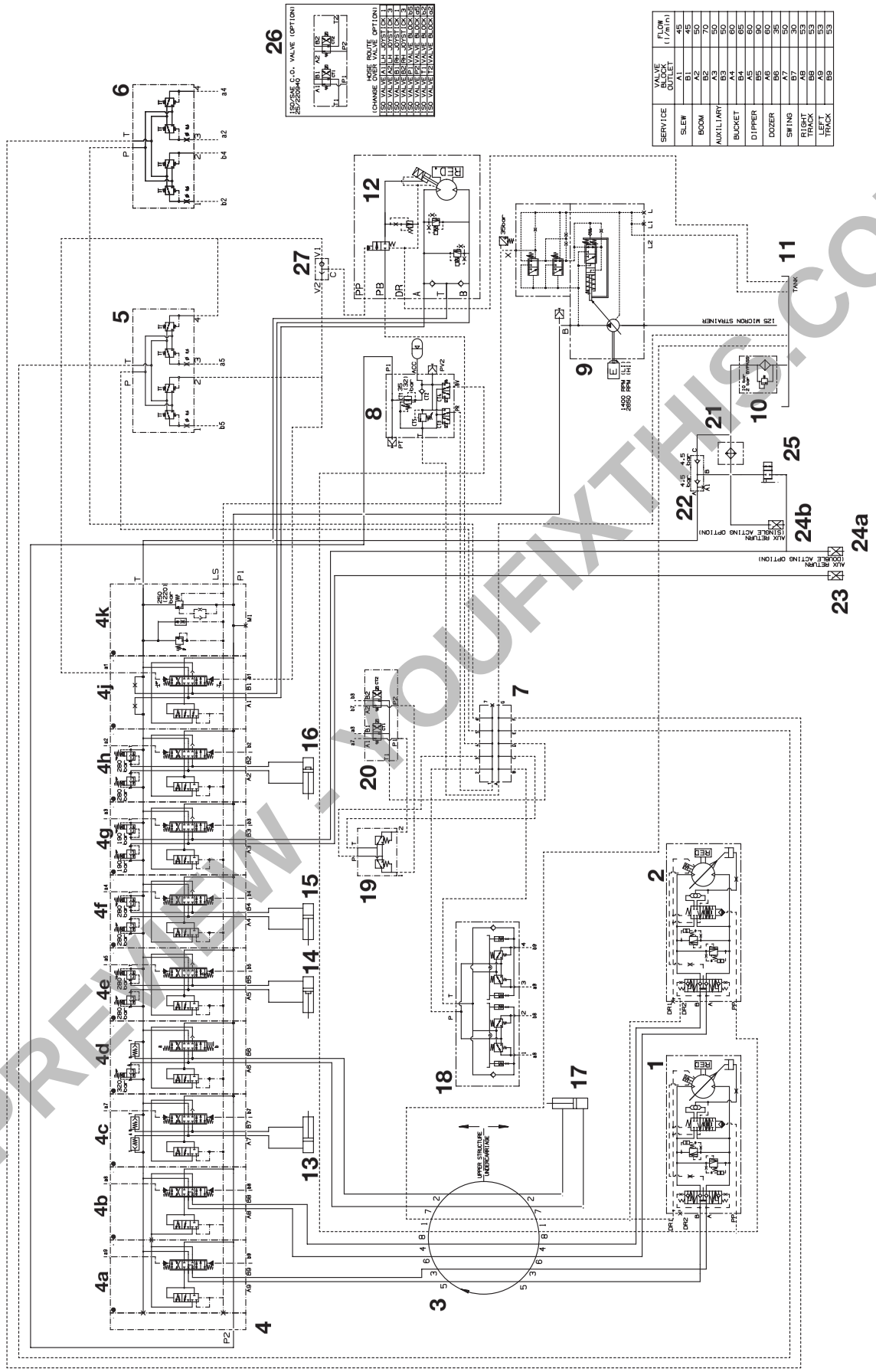

Fig 1.

PREVIEW - YOUFIXTHIS.COM

Download full manual at youfixthis.com

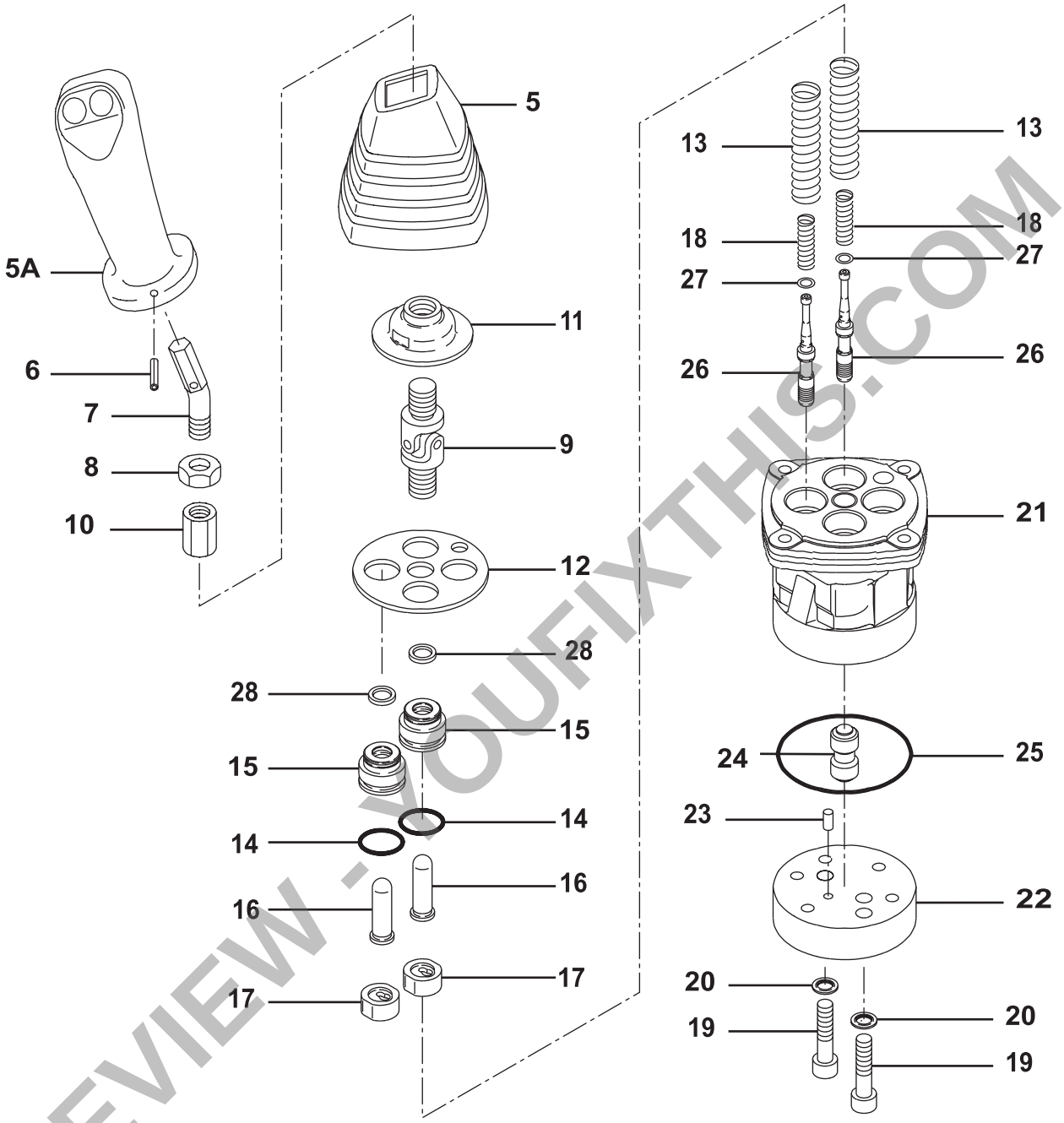

Fig 3.

⇒ *Dismantling (D-8)*.
⇒ *Assembly (D-10)*.

PREVIEW - YOUFIXTHIS.COM

Download full manual at youfixthis.com

Table 2. Torque Settings - UNF Grade 'S' Fasteners

Bolt Size		Hexagon (A/F)	Condition 1			Condition 2		
in.	mm	in.	Nm	kgf m	lbf ft	Nm	kgf m	lbf ft
1/4	6.3	7/16	11.2	1.1	8.3	10.0	1.0	7.4
5/16	7.9	1/2	22.3	2.3	16.4	20.0	2.0	14.7
3/8	9.5	9/16	40.0	4.1	29.5	36.0	3.7	26.5
7/16	11.1	5/8	64.0	6.5	47.2	57.0	5.8	42.0
1/2	12.7	3/4	98.00	10.0	72.3	88.0	9.0	64.9
9/16	14.3	13/16	140.0	14.3	103.2	126.0	12.8	92.9
5/8	15.9	15/16	196.0	20.0	144.6	177.0	18.0	130.5
3/4	19.0	1 1/8	343.0	35.0	253.0	309.0	31.5	227.9
7/8	22.2	1 15/16	547.0	55.8	403.4	492.0	50.2	362.9
1	25.4	1 1/2	814.0	83.0	600.4	732.0	74.6	539.9
1 1/8	31.7	1 7/8	1181.0	120.4	871.1	1063.0	108.4	784.0
1 1/4	38.1	2 1/4	1646.0	167.8	1214.0	1481.0	151.0	1092.3

Table 3. Torque Settings - Metric Grade 8.8 Fasteners

Bolt Size		Hexagon (A/F)	Condition 1			Condition 2		
ISO Metric Thread	mm	mm	Nm	kgf m	lbf ft	Nm	kgf m	lbf ft
M5	5	8	5.8	0.6	4.3	5.2	0.5	3.8
M6	6	10	9.9	1.0	7.3	9.0	0.9	6.6
M8	8	13	24.0	2.4	17.7	22.0	2.2	16.2
M10	10	17	47.0	4.8	34.7	43.0	4.4	31.7
M12	12	19	83.0	8.5	61.2	74.0	7.5	54.6
M16	16	24	205.0	20.9	151.2	184.0	18.8	135.7
M20	20	30	400.0	40.8	295.0	360.0	36.7	265.5
M24	24	36	690.0	70.4	508.9	621.0	63.3	458.0
M30	30	46	1372.0	139.9	1011.9	1235.0	125.9	910.9
M36	36	55	2399.0	244.6	1769.4	2159.0	220.0	1592.4

PREVIEW - YOUFIXTHIS.COM

Download full manual at youfixthis.com

Flash Error Codes

Table 1.

Flash Code	Fault	Engine Shutdown	Corrective Action
1	APECS unit not calibrated	YES	Calibrate APECS unit
2	Engine Speed Excessive	YES	Check parameter settings. Overspeed criteria may be too sensitive.
			Check for electrical noise entering the controller
			Check wiring and connections
			Check case ground
			Make sure linkages move freely without backlash
			Check tip of speed sensor
3	Engine Speed Unusually Low	YES	Check parameter settings.
			Check linkage and actuator travel.
			Ensure that load is not greater than engine capacity
4			Check parameter settings.
			Check what may have triggered the protection input
5	Factory Settings Lost	YES	If calibration file is available, download calibration file and cycle power again.
			if controller still does not work or if no calibration file is available, consult factory.
6	External pot out of range	NO	Verify that pot is wired correctly
			Recalibrate external pot
7	Accelerator position - Idle switch conflict	NO	Verify that signals are working and synchronised
8	Controller unit failed	YES	Electrical noise may be entering controller.
			Check wiring, shielding and connections to the controller
			Cycle power to engine
			If controller still does not work, consult factory.
9	Limiting excessive actuator current	NO	Check Actuator for short to ground or low resistance.
			Check parameter settings.
			Check linkage and actuator travel.
			Ensure that the load is not greater than the engine capacity.
10	Engine speed input signal missing (Active only in Autocrank mode)	NO	Check speed sensor warning
			Check starter motor
11	Autocrank unable to start engine	NO	Check Fuel
12	Auxiliary output is shorted	NO	Check the lamp or relay hooked to the output. If fault is still present consult factory.

PREVIEW - YOUFIXTHIS.COM

Download full manual at youfixthis.com

Prepare the Machine for Maintenance

Introduction

P11-3001

⚠ WARNING

Maintenance must be done only by suitably qualified and competent persons.

Before doing any maintenance make sure the machine is safe, it should be correctly parked on level ground.

To prevent anyone starting the engine, remove the starter key. Disconnect the battery when you are not using electrical power. If you do not take these precautions you could be killed or injured.

8-3-1-1

Make the machine safe before you start a maintenance procedure.

Unless a maintenance procedure instructs you differently, you must lower the Excavator. Refer to ***How to Make the Machine Safe (Excavator Lowered)***.

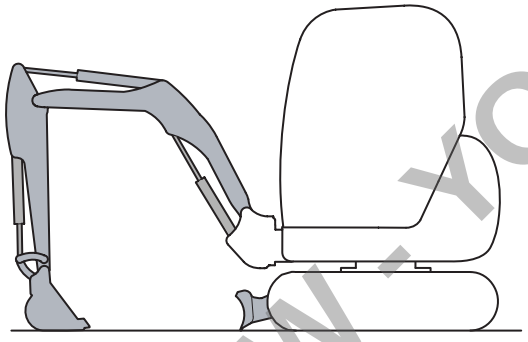

717260-4

Fig 2.

How to Make the Machine Safe (Excavator Lowered)

P11-3002

Important: *Unless a maintenance procedure instructs you differently, you must lower the Excavator.*

1 Park the machine on level, solid ground.

If necessary, refer to ***Stopping and Parking the Machine*** in the Operator Manual.

2 Lower the dozer.

3 Lower the excavator so the attachment is flat on the ground.

4 Stop the engine and remove the starter key.

5 Disconnect the battery to prevent accidental operation of the engine.

PREVIEW - YOUFIXTHIS.COM

Download full manual at youfixthis.com

Fault Finding

Servo Hand Controllers

Table 1.

Symptom	Possible cause	Remedy
1 Low secondary pressure.	Primary pressure is low.	Check servo pressure maintenance valve.
	Spring **18** is damaged. ⇨ *Fig 3. (D-9)*.	Renew the spring.
	Clearance between the spool and seating is too large.	Renew the remote control valve assembly.
	The handle unit is loose.	Dismantle, reassemble or renew the handle unit.
2 Unstable secondary pressure.	Sliding parts are sticking.	Release the sticking part.
	Fluctuations in the tank line pressure.	Check return line and filter for blockage.
	Air is trapped in the piping.	Operate the valve several times to remove the air.
3 High secondary pressure.	The tank line pressure is too high.	Check return line and filter for blockage.
	Sliding parts are sticking.	Release the sticking part.

PREVIEW - YOUFIXTHIS.COM

Download full manual at youfixthis.com

Technical Data

All Machines

Pump

Type	Load sensing variable displacement pump driven from engine crankshaft.
Flow Rate at 2400 rev/min. and at neutral circuit pressure	150 litre/min. (63 cc/rev)

	8040Z		8045Z		8050Z/8050C		8055Z	
Relief Valve Operating Pressures	**bar**	**lbf/in²**	**bar**	**lbf/in²**	**bar**	**lbf/in²**	**bar**	**lbf/in²**
Main Relief Valve (M.R.V.)	220	3190	250	3625	250	3625	250	3625
Servo Pressure:								
Maintenance Valve	32	464	35	508	35	508	35	508
Auxiliary Relief Valves (A.R.V.)								
Boom rod and head side	280	4060	280	4060	280	4060	280	4060
Dipper rod and head side	280	4060	280	4060	280	4060	280	4060
Dozer rod side	320	320	320	4641	320	4641	320	4641
Bucket rod and head side	280	4060	280	4060	280	4060	280	4060
Auxiliary rod and head side	190	2755	190	2755	190	2755	190	2755
Swing rod and head side	Anti-cavitation valve		Anti-cavitation valve		Anti-cavitation valve		Anti-cavitation valve	

PREVIEW - YOUFIXTHIS.COM

Download full manual at youfixthis.com

Pre-Start Cold Checks, Service Points and Fluid Levels

	Operation	10	50	500	1000	2000
ENGINE						
Oil level	- Check	☐	☐	☐	☐	☐
Oil and Filter	- Change			☐	☐	☐
Air Cleaner Element (Dusty Conditions only)	- Change			☐	☐	☐
Air Cleaner Outer Element	- Change				☐	☐
Air Cleaner Inner Element	- Change					☐
Air Cleaner Hose Security	- Check and Adjust		☐	☐	☐	☐
Air Filter Dust Valve	- Check and Clean			☐	☐	☐
Fuel Injectors(1)	- Clean and Test					☐
Coolant Quality/Level	- Check	☐	☐	☐	☐	☐
Coolant	- Change					☐
Fuel Lift Pump	- Clean			☐	☐	☐
Fuel Sedimenter	- Drain and Clean		☐	☐	☐	☐
Fuel Filter/Sedimenter Element	- Change			☐	☐	☐
Primary Fuel Filter	- Check			☐	☐	☐
Fuel Pre Filter	- Check			☐	☐	☐
Fan Belt Tension/Condition	- Check and Adjust		☐	☐	☐	☐
Valve Clearances(1)	- Check and Adjust				☐	☐
Cylinder Head Bolts for Tightness	- Check and Adjust			☐	☐	☐
Engine Mounting Bolts for Tightness	- Check and Adjust			☐	☐	☐
Exhaust System Security	- Check and Adjust			☐	☐	☐
Radiator	- Clean and Check	☐	☐	☐	☐	☐
TRANSMISSION						
Security of Mounting Bolts and Nuts						
- Track Wheel Motor to Undercarriage Bolts	- Check			☐	☐	☐
- Drive Sprocket Bolts	- Check			☐	☐	☐
- Slew Gearbox Bolts	- Check				☐	☐
Track Gearbox Oil	- Change			☐	☐	☐
HYDRAULICS						
Oil Level	- Check	☐	☐	☐	☐	☐

PREVIEW - YOUFIXTHIS.COM

Download full manual at youfixthis.com

Controls

Controls Identification

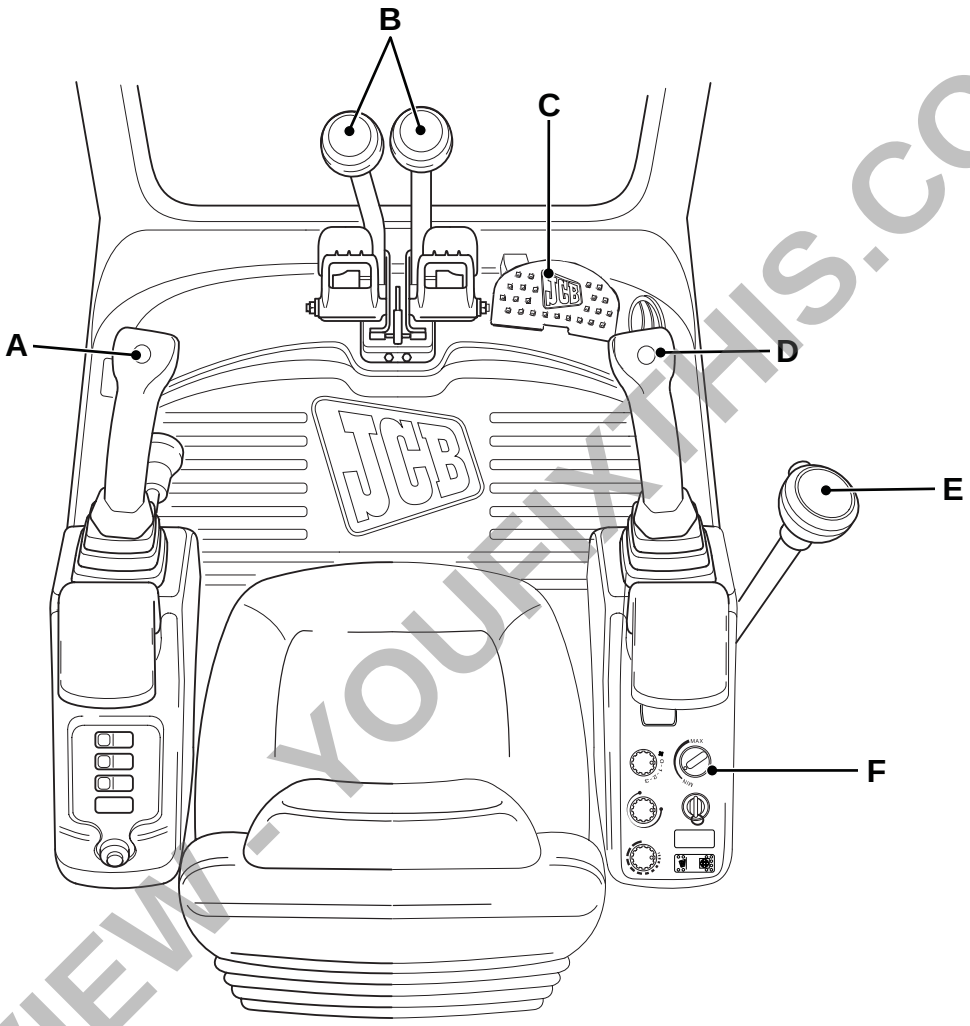

Fig 1.

A	Left Hand Control Lever
B	Track Levers
C	Swing/Auxiliary Pedal
D	Right Hand Control Lever
E	Dozer Lever
F	Engine Throttle

PREVIEW - YOUFIXTHIS.COM

Download full manual at youfixthis.com

Safety Check List

P11-1010_3

Safety - Yours and Others

INT-1-3-1_3

All machinery can be hazardous. When a machine is correctly operated and properly maintained, it is a safe machine to work with. But when it is carelessly operated or poorly maintained it can become a danger to you (the operator) and others.

In this manual and on the machine you will find warning messages. Read and understand them. They tell you of potential hazards and how to avoid them. If you do not fully understand the warning messages, ask your employer or JCB distributor to explain them.

But safety is not just a matter of responding to the warnings. All the time you are working on or with the machine you must be thinking what hazards there might be and how to avoid them.

Do not work with the machine until you are sure that you can control it.

Do not start any job until you are sure that you and those around you will be safe.

If you are unsure of anything, about the machine or the job, ask someone who knows. Do not assume anything.

Remember

BE CAREFUL
BE ALERT
BE SAFE

General Safety

T1-043

⚠ WARNING

To operate the machine safely you must know the machine and have the skill to use it. You must abide by all relevant laws, health and safety regulations that apply to the country you are operating in. The Operator Manual instructs you on the machine, its controls and its safe operation; it is not a training manual. If you are a new operator, get yourself trained in the skills of using a machine before trying to work with it. If you don't, you will not do your job well, and you will be a danger to yourself and others.

INT-1-4-1

⚠ WARNING

Care and Alertness

All the time you are working with or on the machine, take care and stay alert. Always be careful. Always be alert for hazards.

INT-1-3-5

⚠ WARNING

Clothing

You can be injured if you do not wear the proper clothing. Loose clothing can get caught in the machinery. Wear protective clothing to suit the job. Examples of protective clothing are: a hard hat, safety shoes, safety glasses, a well fitting overall, ear-protectors and industrial gloves. Keep cuffs fastened. Do not wear a necktie or scarf. Keep long hair restrained. Remove rings, watches and personal jewellery.

INT-1-3-6_2

⚠ WARNING

Alcohol and Drugs

It is extremely dangerous to operate machinery when under the influence of alcohol or drugs. Do not consume alcoholic drinks or take drugs before or while operating the machine or attachments. Be aware of medicines which can cause drowsiness.

INT-1-3-9_2

PREVIEW - YOUFIXTHIS.COM

Download full manual at youfixthis.com

Contents **Page No.**

Introduction
About this Manual 1-1
Machine Model and Serial Number 1-1
Using the Service Manual 1-1
Section Numbering 1-1
Left Side, Right Side 1-2
Cross References 1-2

Identifying Your Machine
Identification Plates 1-3
Machine Identification Plate 1-3
Typical Product Identification Number (PIN) 1-3
Typical Engine Identification Number 1-4
ROPS, TOPS and FOGS 1-5

Standard Torque Settings
Zinc Plated Fasteners and Dacromet Fasteners 1-7
Introduction 1-7
Bolts and Screws 1-7
Hydraulic Connections 1-11
'O' Ring Face Seal System 1-11
'Torque Stop' Hose System 1-14

Service Tools
Numerical List 1-15
Tool Detail Reference 1-18
Section B - Frame and Bodywork 1-18
Section C - Electrics 1-22
Section E - Hydraulics 1-23
Section K - Engine 1-28

Service Consumables
Sealing and Retaining Compounds 1-29

Terms and Definitions
Colour Coding 1-31
Hydraulic Schematic Colour Codes 1-31

PREVIEW - YOUFIXTHIS.COM

Download full manual at youfixthis.com

Service Manual

8040, 8045, 8050, 8055

Section 1 - General Information

Section 2 - Care and Safety

Section 3 - Maintenance

Section A - Attachments

Section B - Body and Framework

Section C - Electrics

Section D - Controls

Section E - Hydraulics

Section F - Gearboxes

Section J - Track and Running Gear

Section K - Engine

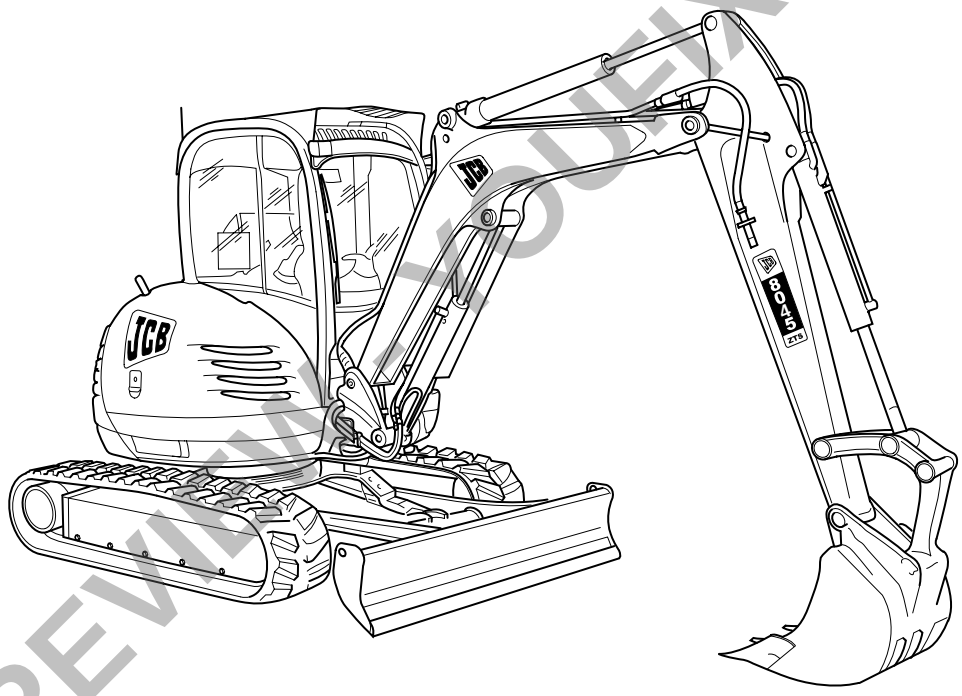

PREVIEW YOUFIXTHIS.COM

Publication No.
9813/1850-1



Copyright © 2004 JCB SERVICE. All rights reserved. No part of this publication may be reproduced, stored in a retrieval system, or transmitted in any form or by any other means, electronic, mechanical, photocopying or otherwise, without prior permission from JCB SERVICE.

Issued by JCB Technical Publications, JCB Aftermarket Training, Woodseat, Rocester, Staffordshire, ST14 5BW, England. Tel +44 1889 591300 Fax +44 1889 591400

World Class
Customer Support

Download full manual at youfixthis.com

Battery Isolator (if installed)

To disconnect the battery from the machine electrics a battery isolator has been fitted.

⚠ CAUTION

Before carrying out arc welding on the machine, disconnect the battery and alternator to protect the circuits and components. The battery must still be disconnected even if a battery isolator is fitted.

INT-3-1-13

At the end of a working cycle or if the machine is being left unattended, provided the lights are not required, the battery must be isolated. Before attempting to start the engine or use the machine electrics the battery isolator key must be fitted and switched on.

To disconnect the machine electrics:

1 Open the engine cover.

2 Turn the battery isolation switch **A** to the off position. ⇨ *Fig 10. (3-33)*.

To connect the machine electrics:

1 Close the engine cover.

2 Turn the battery isolation switch **A** to the on position.

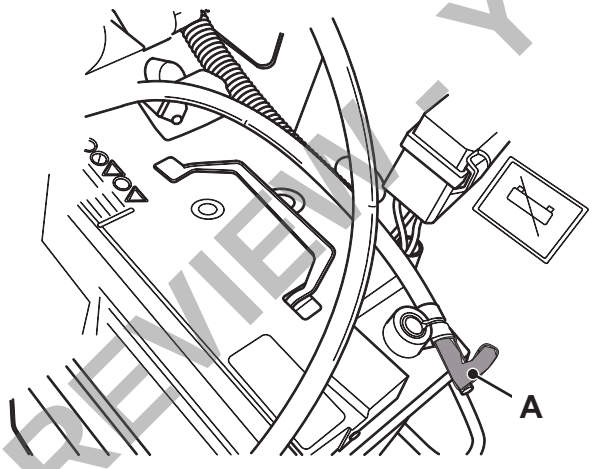

T058970-1

Fig 10.

Jump Starting the Engine

P11-3005

⚠ WARNING

In temperatures below freezing, the battery electrolyte may freeze if the battery is discharged or poorly charged. Do not use a battery if its electrolyte is frozen. To prevent the battery electrolyte from freezing, keep the battery at full charge.

If you try to charge a frozen battery or jump-start and run the engine, the battery could explode.

Batteries produce a flammable gas, which is explosive; do not smoke when checking the electrolyte levels.

When jump-starting from another vehicle, make sure that the two vehicles do not touch each other. This prevents any chance of sparks near the battery.

Switch off all circuits which are not controlled by the starter switch.

Do not connect the booster (slave) supply directly across the starter motor.

Use only sound jump leads with securely attached connectors. Connect one jump lead at a time.

The machine has a negative earth electrical system. Check which battery terminal is positive (+) before making any connections. Keep metal watch straps and jewellery away from the jump lead connectors and the battery terminals - an accidental short could cause serious burns and damage equipment. Make sure you know the voltage of the machine. The booster (slave) supply must not be higher than that of the machine. Using a higher voltage supply will damage your machine's electrical system. If you do not know the voltage of your booster (slave) supply, then contact your JCB dealer for advice. Do not attempt to jump-start the engine until you are sure of the voltage of the booster (slave) supply.

8-2-7-4

Note: *The machine has a 12 Volt electrical system. Using a booster (slave) supply with a higher voltage will damage the machine's electrical system. The negative (-) terminal on the battery is connected to frame earth.*

PREVIEW - YOUFIXTHIS.COM

Download full manual at youfixthis.com

Wiring Harness Repair

TC-004

Introduction

Instances do occur where it is necessary to incorporate auxiliary electrical components into existing electrical circuits and, although unlikely with present wiring harnesses, repair or replace specific individual wires within a harness. This will also apply to other machines in addition to those of manufacture.

To ensure that either the inclusion of an auxiliary electrical component or a repair within a harness is completed to an acceptable standard it is strongly recommended that the following tools, equipment and procedures are always used. Note that JCB harnesses have an International Protection rating of 67 (I.P.67).

The sheath covering of the recommended splice is heat shrunk onto the original wire insulation. This results in a seal and corresponding joint to IP 67 specifications.

⚠ CAUTION

When installing Auxiliary Electrical Components always ensure that the additional load rating is suitable for that particular circuit. It is unacceptable to simply increase the fuse rating as this can cause overloading and consequential failure of wiring, along with failure of integral circuit components, which the fuse is protecting.

ELEC-2-1

⚠ WARNING

In addition to the warnings incorporated into this procedure, extreme care should be taken when handling the gas heating tool to ensure that the flame does not damage or set fire to any items in the vicinity of the repair, i.e. other wires, floor panels, floor mats, sound proofing, paintwork, etc. This tool should not be used in any restricted location prohibiting the use of "Naked Flames" or where risk of explosive gas or similar safety parameters apply. No other heat source should be used to attempt a sealed joint.

ELEC-2-2

⚠ CAUTION

When the heater is in use, the reflector and the air coming out are extremely hot. Keep away to avoid accidental burns. Do not touch the reflector until it has had time to cool down after switching off. If flame reappears at the reflector when the heater is in use, the catalytic element is damaged or used up. Stop work immediately and replace the heater.

ELEC-2-3

Repair Procedure

Table 3. Tools Required

Part No.	Description	Qty
892/00350	Butane Heater assembly	1
892/00349	Crimp tool	1
892/00351	Splice 0.5-1.5 mm (Red)	50
892/00352	Splice 1.5-2.5 mm (Blue)	50
892/00353	Splice 3.0-6.0 mm (Yellow)	50

1 Cut the wire and remove the protective insulation for a suitable distance dependent upon the size of wire and splice to be used. For the splices detailed in ⇨ *Table 3. (C-15)*, the dimension is 7mm.

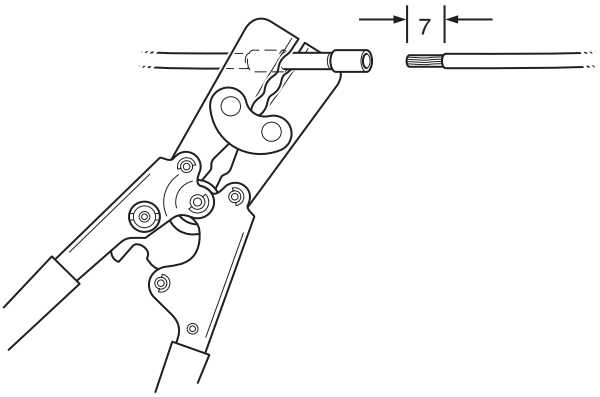

Fig 15.

2 Using the correct sized splice, attach the new section of wire required or auxiliary flying lead to the existing harness and secure using the crimp tool. ⇨ *Fig 15. (C-15)*. Note that each of the splices detailed is colour-coded to make size and range

PREVIEW - YOUFIXTHIS.COM

Download full manual at youfixthis.com

Contents **Page No.**

Removal and Replacement 1-106
Removal 1-106
Replacement 1-106
Dismantling, Inspection and Assembly 1-108
Dismantling 1-108
Inspection 1-108
Assembly 1-109
Control Valve Sections 1-110
Inlet/Outlet 1-110
Slew 1-112
Boom 1-114
Auxiliary 1-116
Bucket 1-118
Dipper 1-120
Dozer 1-122
Swing 1-124
Track Right 1-126
Track Left 1-128

Rotary Coupling
Removal and Replacement 1-131
Removal 1-131
Replacement 1-131
Dismantling, Inspection and Assembly 1-132
Dismantling 1-132
Inspection 1-132
Assembly 1-132

Hydraulic Rams
Precautions During Use 1-135
Installation 1-135
Caution During Use 1-135
Maintenance, Inspection Points 1-135
Removal and Replacement 1-137
Boom, Dipper and Bucket Rams 1-138
Dozer Ram 1-139
Swing Ram 1-141
Dismantling and Assembly 1-142
All Rams 1-142

PREVIEW - YOUFIXTHIS.COM

Download full manual at youfixthis.com

Dismantling and Assembly

⇨ *Fig 12. (1-90)* shows the spares which are available at this time. The numerical annotations correspond to the spares listed in the Spares Catalogue 9802/5510, to which reference should be made for part numbers.

PREVIEW - YOUFIXTHIS.COM

Download full manual at youfixthis.com

PREVIEW ONLY

You're viewing 17 of 457 pages

The full manual includes:

- All 457 pages, complete
- Searchable PDF (find any keyword)
- No watermarks
- Instant download
- Print-ready quality

GET FULL MANUAL NOW

JCB 8040, 8045, 8050, 8055, HP 404C-22 (Tier 2), GN 404D-22 (Tier 3) Service Manual

Scan or click anywhere
youfixthis.com

Click anywhere on this page to get the full manual