Service Manual

JS70
from machine no. 695501

PUBLISHED BY THE
TECHNICAL PUBLICATIONS DEPARTMENT
OF JCB SERVICE: ©
ROCESTER, STAFFORDSHIRE, ST14 5LS,
ENGLAND
Tel. ROCESTER (01889) 590312
PRINTED IN ENGLAND

Publication No. 9803/6020
Issue 0

General Information 1
Care & Safety 2
Routine Maintenance 3
Attachments A
Body & Framework B
Electrics C
Hydraulics E
Transmission F
Brakes G
Track & Running Gear J
Engine K

PREVIEW - YOUFIXTHIS.COM

Download full manual at youfixthis.com

Contents **Page No.**

Bolt and Nut Torque Specifications 1 - 1

General Torque Settings 1 - 2

Service Tools
- Section C - Electrics 4 - 1
- Section E - Hydraulics 5 - 1
- Section F - Transmission 6 - 1

Sealing and Retaining Compounds 7 - 1

PREVIEW - YOUFIXTHIS.COM

Download full manual at youfixthis.com

In this publication and on the machine, there are safety notices. Each notice starts with a signal word. The signal word meanings are given below.

⚠ DANGER

Denotes an extreme hazard exists. If proper precautions are not taken, it is highly probable that the operator (or others) could be killed or seriously injured.

INT-1-2-1

⚠ WARNING

Denotes a hazard exists. If proper precautions are not taken, the operator (or others) could be killed or seriously injured.

INT-1-2-3

⚠ CAUTION

Denotes a reminder of safety practices. Failure to follow these safety practices could result in injury to the operator (or others) and possible damage to the machine.

INT-1-2-3

PREVIEW - YOUFIXTHIS.COM

Download full manual at youfixthis.com

CAPACITIES AND SPECIFICATIONS

Note: *New engines DO NOT require a running-in period. The engine should be used in a normal work cycle immediately; glazing of the piston cylinder bores, resulting in excessive oil consumption, could occur if the engine is gently run-in. Under no circumstances should the engine be allowed to idle for extended periods (e.g. warming-up without load).*

Item	Fluid/Lubricant	International Specification	Capacity
ENGINE	See separate chart	-	6.8 litres (1.49 UK gal)
SLEW GEARBOX	JCB HP Grease	Lithium based, No. 2 consistency	0.2 kg (0.44 lb)
TRACK GEARBOXES	JCB Gear Oil HD90	API-GL-5, MIL-L-2105C	2 x 1.7 litres (0.37 UK gal)
TRACK ROLLERS AND IDLER WHEEL	Engine Oil (see separate chart)	-	-
HYDRAULIC SYSTEM	JCB Special Hydraulic Fluid HP46	Vickers 35VQ25/V104C: Sundstrand, Denison and FZG Approval Tests	92 litres (20.26 UK gal)
SLEW RING - BEARINGS - GEAR TEETH	 JCB HP Grease JCB HP Grease	 Lithium based, No. 2 consistency	 - 3.2 kg (7.14 lb)
ALL OTHER GREASE POINTS	JCB HP Grease	Lithium based, No. 2 consistency	
COOLING SYSTEM	See ***Coolant Mixtures***	ASTM D3306-74	10.1 litres (2.22 UK gal)
FUEL TANK	See ***Fuel System***, ***Types of Fuel***	ASTM D975-66T Nos 1D, 2D	140 litres (30.8 UK gal)

Engine Lubrication Chart

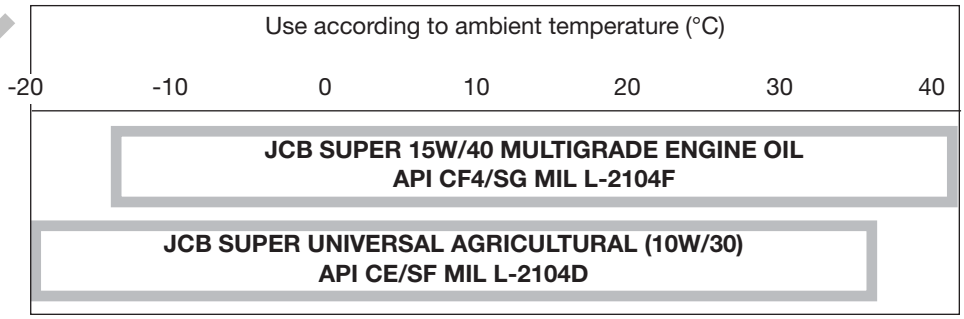

PREVIEW - YOUFIXTHIS.COM

Download full manual at youfixthis.com

Every 10 Operating Hours or Daily
Whichever occurs first

1 **Clean**
- **a** Machine generally.

2 **Grease**
(If operating in very wet or severe conditions)
- **a** Bucket/dipper pivot points.

3 **Check (Engine Stopped)**
- **a** Generally for damage.
- **b** For oil and coolant leakage.
- **c** Security of bolts and nuts ††.
- **d** For disconnected or shorted wiring, loose terminals.
- **e** Hydraulic fluid level.
- **f** Engine oil level.
- **g** Track tension.
- **h** Windscreen washer fluid level.
- **j** Fuel system for leaks.
- **k** Fuel level.
- **l** The auxiliary circuit hydraulic oil filter visual indicator (if using a rockbreaker)

†† Tapping with a hammer will identify any loose nuts and bolts which should then be tightened to the specified torque.

4 **Check (Engine Running)**
- **a** Operation of warning lights and audible alarm.
- **b** Operation of other electrical equipment.
- **c** Exhaust for excessive smoke.
- **d** Excavator operation.
- **e** Transmission operation.
- **f** Operation of track and slew brakes.
- **g** Operation of hour meter.

Every 50 Operating Hours or Weekly
Whichever occurs first

1 **Do the daily jobs plus:**

2 **Clean**
- **a** Drain water and sediment from fuel tank.
- **b** Drain fuel water separator.

3 **Grease**
- **a** All pivot pins.

Every 100 Operating Hours or 2-Weekly
Whichever occurs first

1 **Do a 50 hour service plus:**

2 **Clean**
- **a** Battery terminals.
- **b** Fuel lift pump strainer†.

3 **Change**
- **a** Engine oil main filter element †.
- **b** Engine oil †.
- **c** Servo oil filter element †.
- **d** Engine oil filter by-pass element †.
- **e** Return filter element†.
- **f** Drain filter element †.
- **g** Track gearbox oil†.
- **h** Fuel filter element†.

4 **Check (Engine Stopped)**
- **a** Hoses and pipework for chafing or damage.
- **b** Condition of ram piston rods.
- **c** Bucket pivot pin grease seals†.
- **d** Track plate condition.
- **e** Track and running gear.
- **f** Top and bottom track rollers for oil leaks †.
- **g** Track idler wheels for oil leaks †.
- **h** Security of major unit mounting bolts and nuts†. If loose, tighten to specified torque.
- **i** Wiring for chafing.
- **j** Fan belt adjustment†.
- **k** Accumulator operation.
- **l** Radiator for damage.
- **m** Oil cooler for damage.
- **n** Battery electrolyte level†.
- **p** Exhaust system security†.
- **r** Teeth and sidecutters†.

5 **Check (Engine Running)**
- **a** Operation of throttle system†.
- **b** Operation of overload warning†.
- **c** Operation of stop control†.

† These procedures are only to be carried out after the first 100 hours use of a new machine. Thereafter they are to be carried out as detailed in the following periodic checks.

PREVIEW - YOUFIXTHIS.COM

Download full manual at youfixthis.com

Bolt and Nut Torque Specifications

Tighten the bolts and nuts according to the table. Before and after daily work, check the bolts and nuts for looseness and for those missing. Tighten if loose and renew if missing.

Tighten the bolts and nuts after the first 50 hours of the running-in stage and every 250 hours thereafter.

Torque Tightening Table

No	Tightening Point	Bolt Diameter	Wrench	Tightening Torque		
			mm	Nm	kgf m	lbf ft
1†	Travel Motor	M16	24	268~312	27.2~31.8	197~230
2†	Drive Sprocket	M14	22	173~202	17.6~20.6	128~149
3†	Idler Wheel	M10	17	63~73	6.9~7.4	46~54
4†	Upper (Carrier) Roller	M16	24	267~312	27.2~31.8	197~230
5†	Lower (Track) Roller	M12	19	109~127	11~13	80~94
6†	Grease Cylinder	M12	19	109~127	11~13	80~94
7†	Track Guard	M12	19	109~127	11~13	80~94
8	Shoe Bolt	U1/2 - 38	19	196~235	20~24	145~173
9†	Counterweight	M24	36	660~770	67.3~78.5	487~568
10†	Turntable Bearing (Undercarriage)	M16	24	252~283	25.7~28.9	186~209
11†	Turntable Bearing (Slew Frame)	M16	24	252~283	25.7~28.9	186~209
12†	Slew Equipment	M16	24	273~318	27.8~32.4	201~235
13†	Engine (Engine Mount)	M16	24	167~216	17~22	123~159
14†	Engine Bracket	M10/M16	17/24	65~75/167~216	6.6~7.7/17~22	48~55/123~159
15	Radiator	M10	17	30~35	3.1~3.6	22~26
16†	Hydraulic Pump	M10/M12	17/19	63~73/109~127	6.4~7.4/11~13	46~54/80~94
17†	Hydraulic Oil Tank	M16	24	160~172	16.3~17.5	118~127
18†	Fuel Tank	M16	24	160~172	16.3~17.5	118~127
19†	Control Valve	M12	19	53~65	5.4~6.6	39~48
20†	Rotary Coupling	M10	17	63~73	6.4~7.4	46~54
21	Cab	M16	24	79~88	8~9	58~65
22	Battery	M10	17	20~30	2~3	15~22

Note: Use JCB Threadlocker and Sealer (High Strength) on those marked † and tighten to the torque listed in the above table.

PREVIEW - YOUFIXTHIS.COM

Download full manual at youfixthis.com

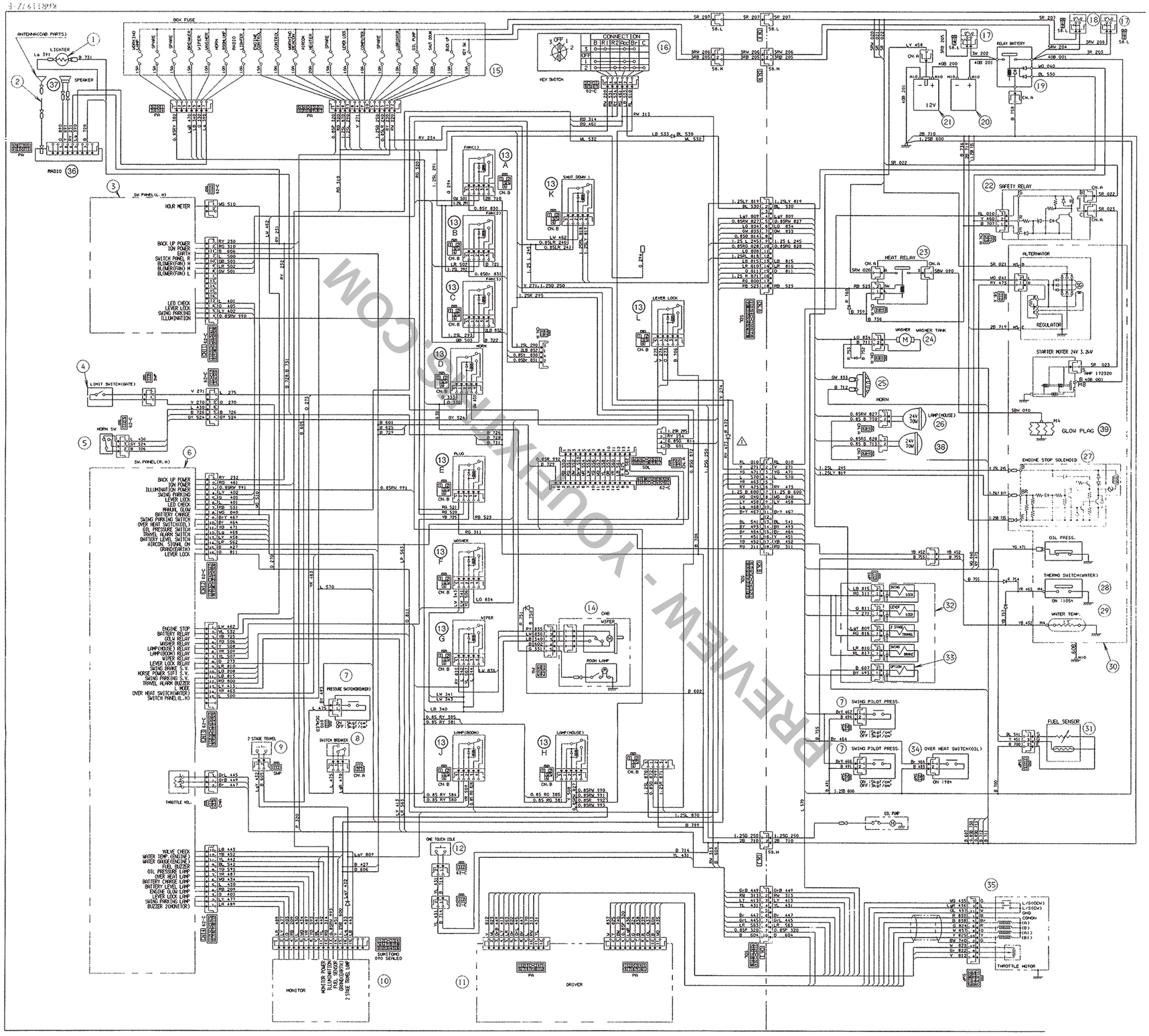

Download full manual at youfixthis.com

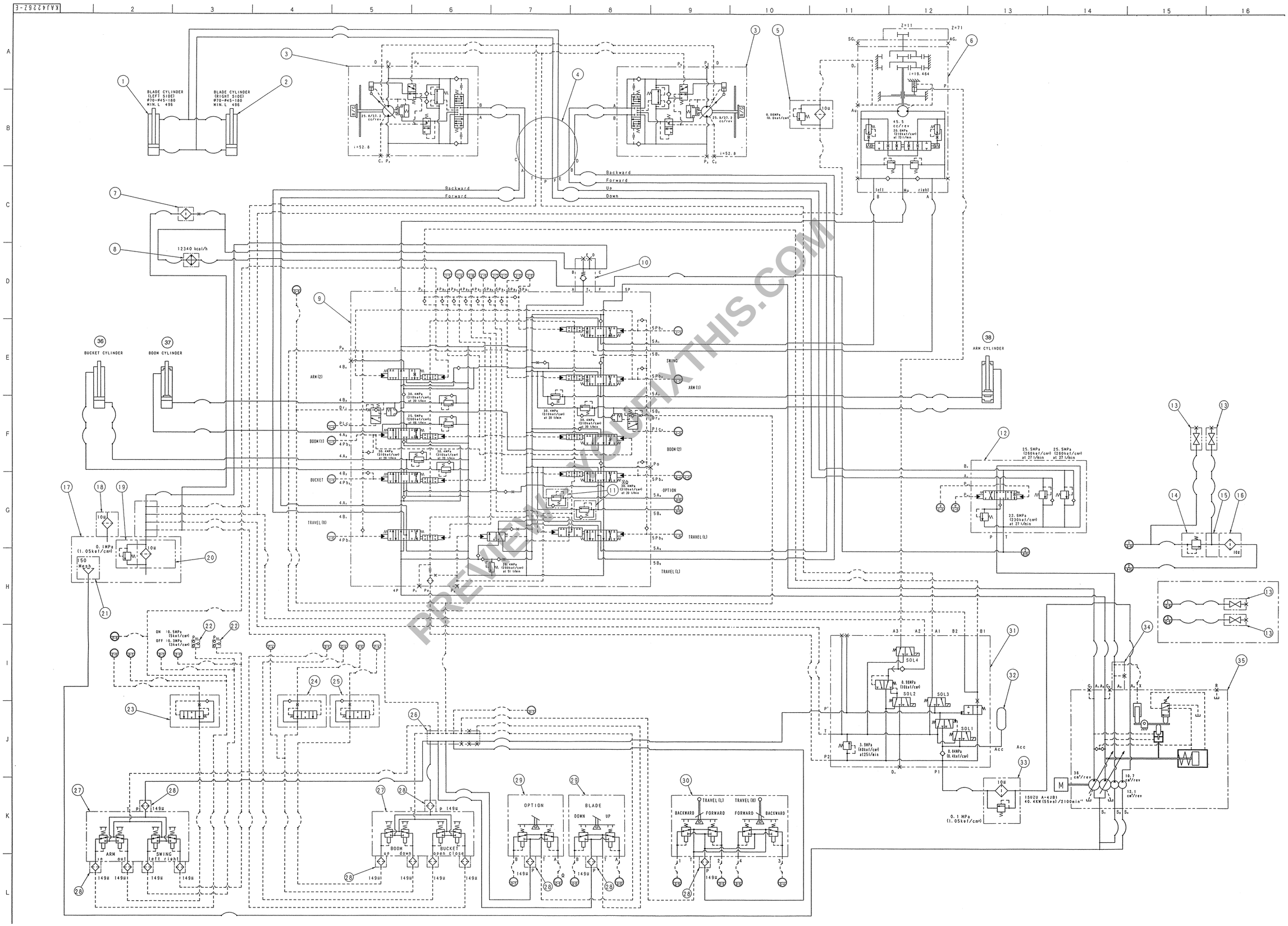

Download full manual at youfixthis.com

Exploded View (Traction Motor)

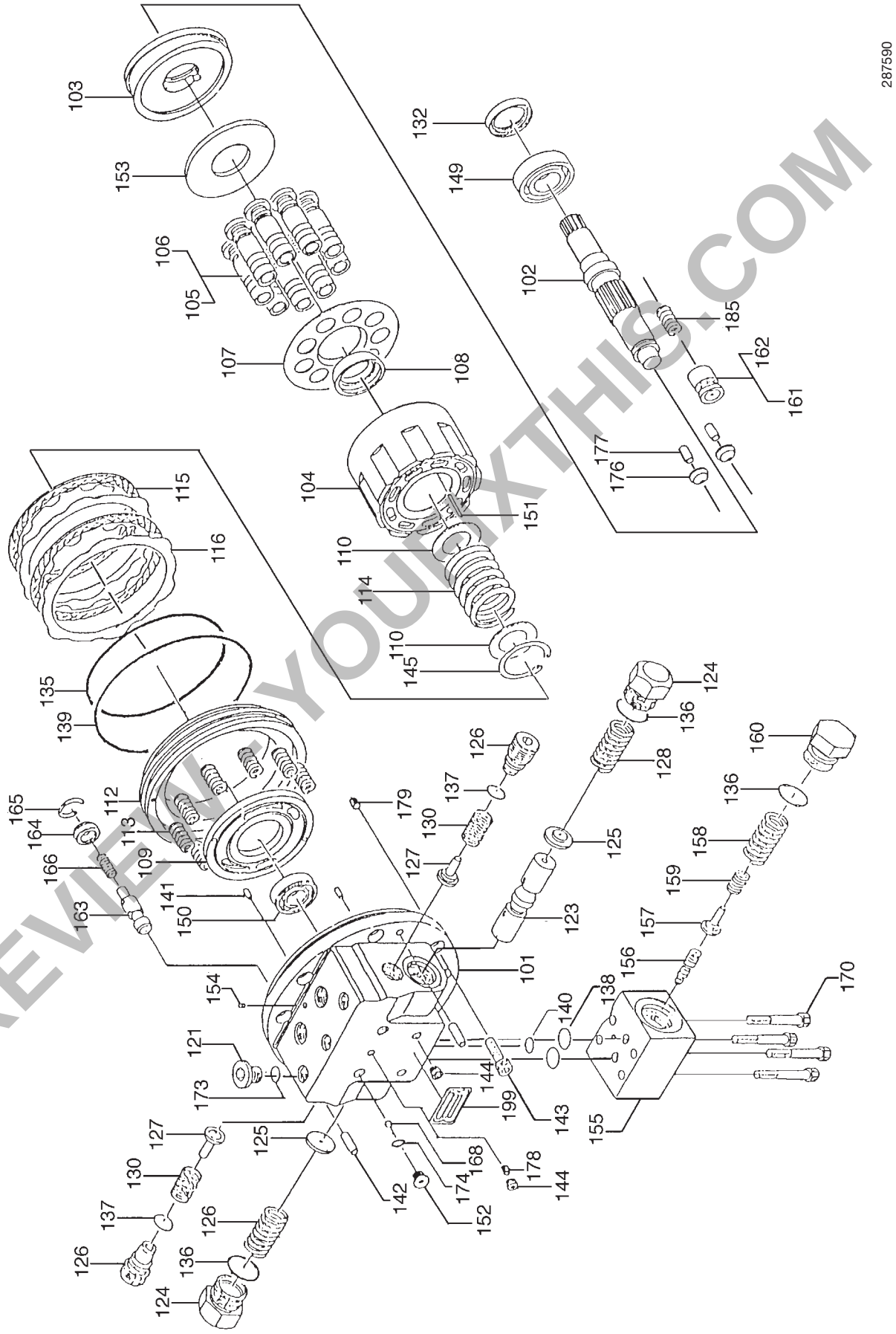

PREVIEW OF YOUFIXTHIS.COM

Download full manual at youfixthis.com

Fault finding

As a first step towards locating a fault, carry out the following checks.

1 Check the hydraulic filter for the presence of excessive foreign materials. The nature of the foreign materials could yield a clue as to the source of damage or wear.

2 Check the flow rate and condition of the oil drained from the pump.

3 Check for abnormal sounds and vibration.

4 Check the pressure at each of the pump pressure test points.

Symptom	Possible cause	Remedy
1 Pump is producing abnormal noise.	**a** Air is being drawn in due to low oil level in the hydraulic oil tank.	Top up the hydraulic oil and bleed air from the system.
	b Pump cavitation due to a clogged suction strainer.	Clean the strainer. If excessively clogged, flush the hydraulic system and/or renew the hydraulic oil.
	c Excessively low oil temperature, or pump cavitation due to high oil viscosity.	Check that the correct hydraulic oil for the ambient conditions is being used. If not, renew the oil.
	d Input shaft rotation speed abnormally high.	Adjust the rotation speed.
	e Component mechanically damaged, Bearing etc.	Replace the damaged parts Reset the pressure. Flush the circuit. Change the hydraulic oil.
2 Insufficient flow.	**a** Input shaft rotation speed decrease.	Adjust the rotation speed.
	b Oil temperature abnormally high.	Stop the operation and re-check after the oil temperature has dropped.
	c Oil viscosity abnormally high.	Check that the correct hydraulic oil for the ambient conditions is being used. If not, renew the oil.
	d Switching valve or actuator leakage.	Replace the switching valve and actuator.
	e Inadequate pump displacement.	Replace the pump.
	f Power adjustment screw is loose.	Reset and lock.
	g Air is being drawn in due to low oil level in the hydraulic oil tank.	Top up the hydraulic oil and bleed air from the system.
	h Pump cavitation due to a clogged suction strainer.	Clean the strainer. If excessively clogged, flush the hydraulic system and/or renew the hydraulic oil.
	j Excessively low oil temperature, or pump cavitation due to high viscosity.	Check that the correct hydraulic oil for the ambient conditions is being used. If not, renew the oil.

PREVIEW - YOUFIXTHIS.COM

Download full manual at youfixthis.com

Changing the Fluid

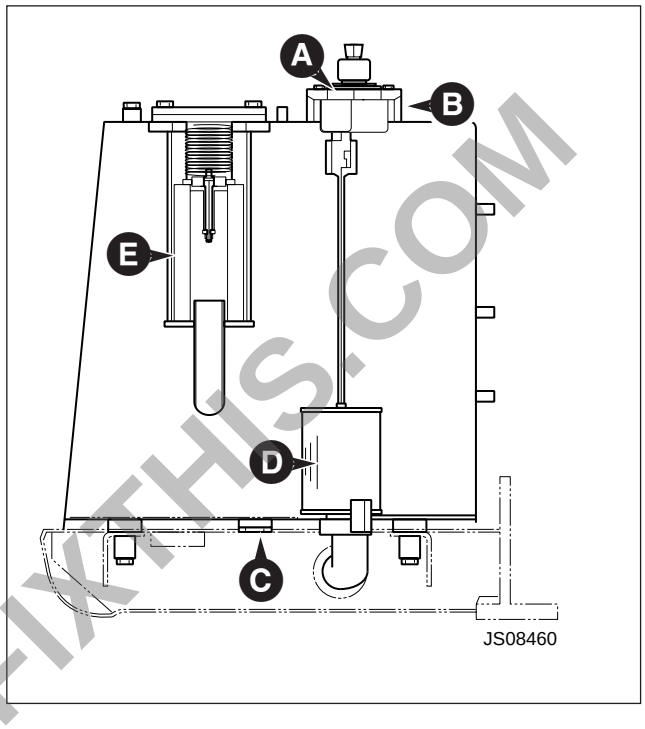

1 Prepare the Machine

Position the machine on level ground. Stop the engine. Remove the starter key.

2 Locate Breather Mounting Plate A and Drain Plug C

These are, respectively, on the top and bottom of the hydraulic oil tank (see ***Identification of Machine Components***).

3 Release Tank Pressure

(See ***Releasing Tank Pressure***)

4 Empty the Tank

a Remove plate **A** and O-ring **B**.

b Use a pump to discharge the hydraulic oil into an empty container.

c Remove drain plug **C** and drain the remaining oil from the tank into a suitable drain pan.

5 Renew the Suction Strainer D and Return Filter E

(See ***Cleaning/Changing the Suction Strainer*** and ***Changing the Return Filter***.)

6 Tighten drain plug **C** securely.

7 Refill the tank with the specified oil to the specified level (see ***Fluids and Lubricants - Capacities and Specifications***).

8 To seal the system, install O-ring **B** and breather mounting plate **A**.

Note: *If the O-ring is damaged, fit a new one.*

9 Bleed air from the hydraulic components (see ***Air Bleeding Procedures***).

10 Start the engine and run it for about 5 minutes without load. Slowly operate the rams several times and then carry out step 1 above.

11 Check the hydraulic oil level (see ***Checking the Fluid Level***) and top up if necessary (see ***Topping-up Fluid Level***).

PREVIEW - YOUFIXTHIS.COM

Download full manual at youfixthis.com

Technical Data

Type	Isuzu 4JB1, 4 cylinder turbocharged,diesel
Model	4JB1 PAA-04
Bore	93mm (3.7 in)
Stroke	102 mm (4 in)
Swept Volume	2771cm^3 (170 in^3)
Compression Ratio	18.2 :1
Firing Order	1-3-4-2
Valve Clearance	
- Inlet	0.4mm (0.016 in)
- Exhaust	0.4mm (0.016 in)
Dry Weight (approximately)	220 kg (486lb)

Fuel System

Injection Timing (static)	17° BTDC
Injector Opening Pressure	185 bar (2630 lbf/in^2)

Induction System

Air Cleaner Type
For further details see engine service manual,
Publication No. 9803/6920

Note: New engines DO NOT require a running-in period. The engine/machine should be used in a normal work cycle immediately. Glazing of the cylinder bores resulting in excessive oil consumption, could occur if the engine is gently run-in. Under no circumstances should the engine be allowed to idle for extended periods (e.g. warming up without load).

PREVIEW - YOUFIXTHIS.COM

Download full manual at youfixthis.com

Right Console

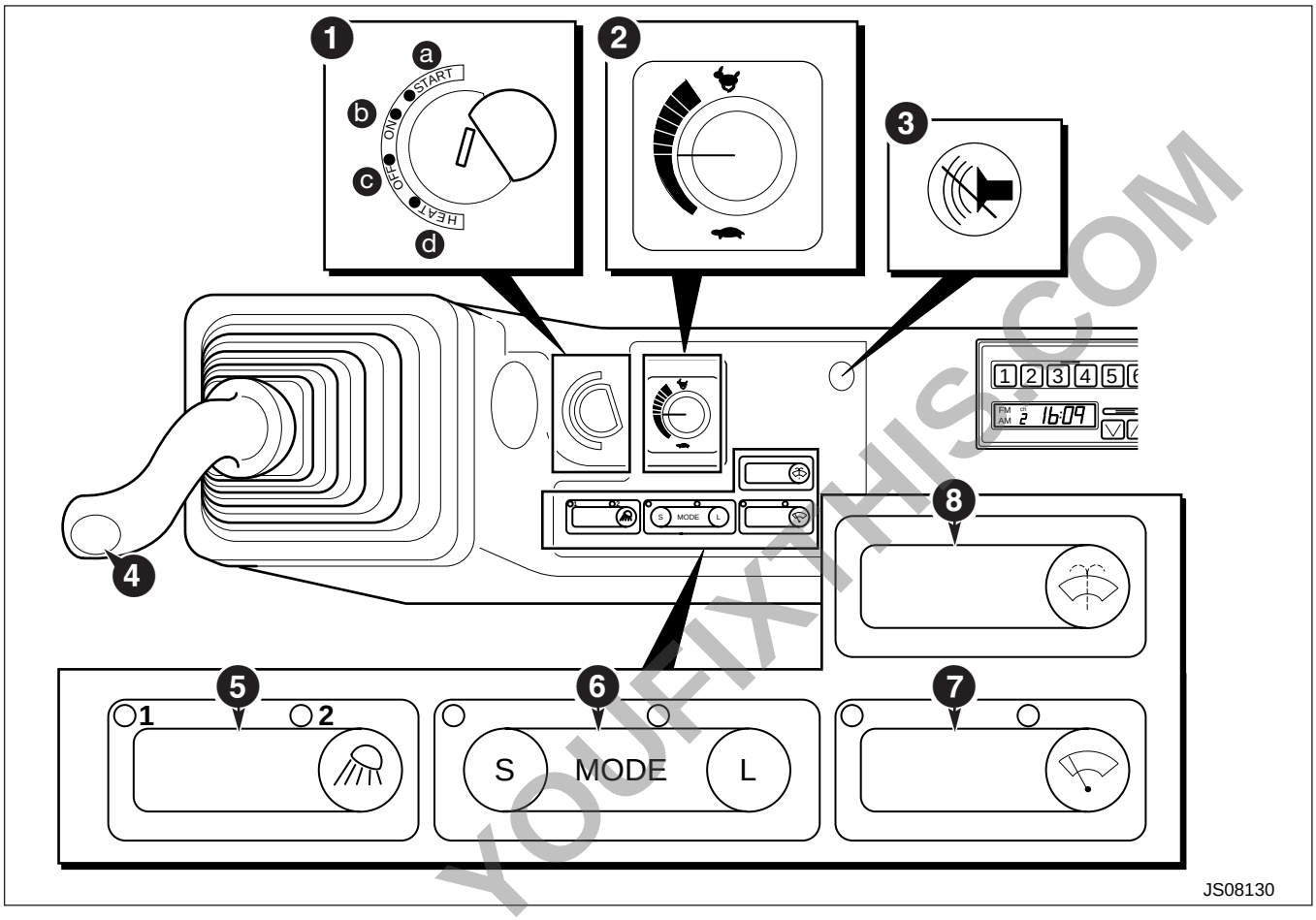

1 Starter Switch.

a START POSITION
Engine starting position.

b ON
Engine running position.
Electrical system energising position.

c OFF
Engine stop position.
Key inserting/removing position.
Electrical system off position.

d HEAT
Engine preheating position.

Note: *The key is also used for both opening/closing the door.*

2 Throttle Control
This rotary control provides progressive engine speed control over the full range.

3 Buzzer Silencing Switch

Press the switch to silence the warning buzzer. Check the items indicated on the monitor and repair or inspect as necessary.

When the switch is pressed, all icons on the monitor should illuminate. Replace the lamps of any icons which are not illuminated.

4 One Touch Idle Switch
The engine speed can be switched back and forth between 'low idling' and the Throttle Control setting with each push of the switch.

PREVIEW - YOUFIXTHIS.COM

Download full manual at youfixthis.com

Quick Heat Circuit

For reducing the warm-up time of the pilot circuit, a quick heat circuit is installed.

When the lock lever is in the OFF position, the hydraulic oil circulates only in the pilot circuit enabling the system to warm-up quickly.

The pressurised oil from pilot pump **P3**, passes through the quick heat circuit valve. When the control switch is set to OFF, the oil enters the spool signal chamber of the main control valve. The warm pressurised oil heats up the remote control valves and cushion valve and returns back to tank.

A	Pressure Line
B	Remote Control Valve
C	Multiple Valve
D	Control Valve
E	Restrictor
F	Valve for Quick Heating
G	Servo Isolator Solenoid Valve
H	Accumulator
J	Gate Lock Lever at Lock Status
K	Pilot Pump
L	ON
M	OFF
N	Starter Switch

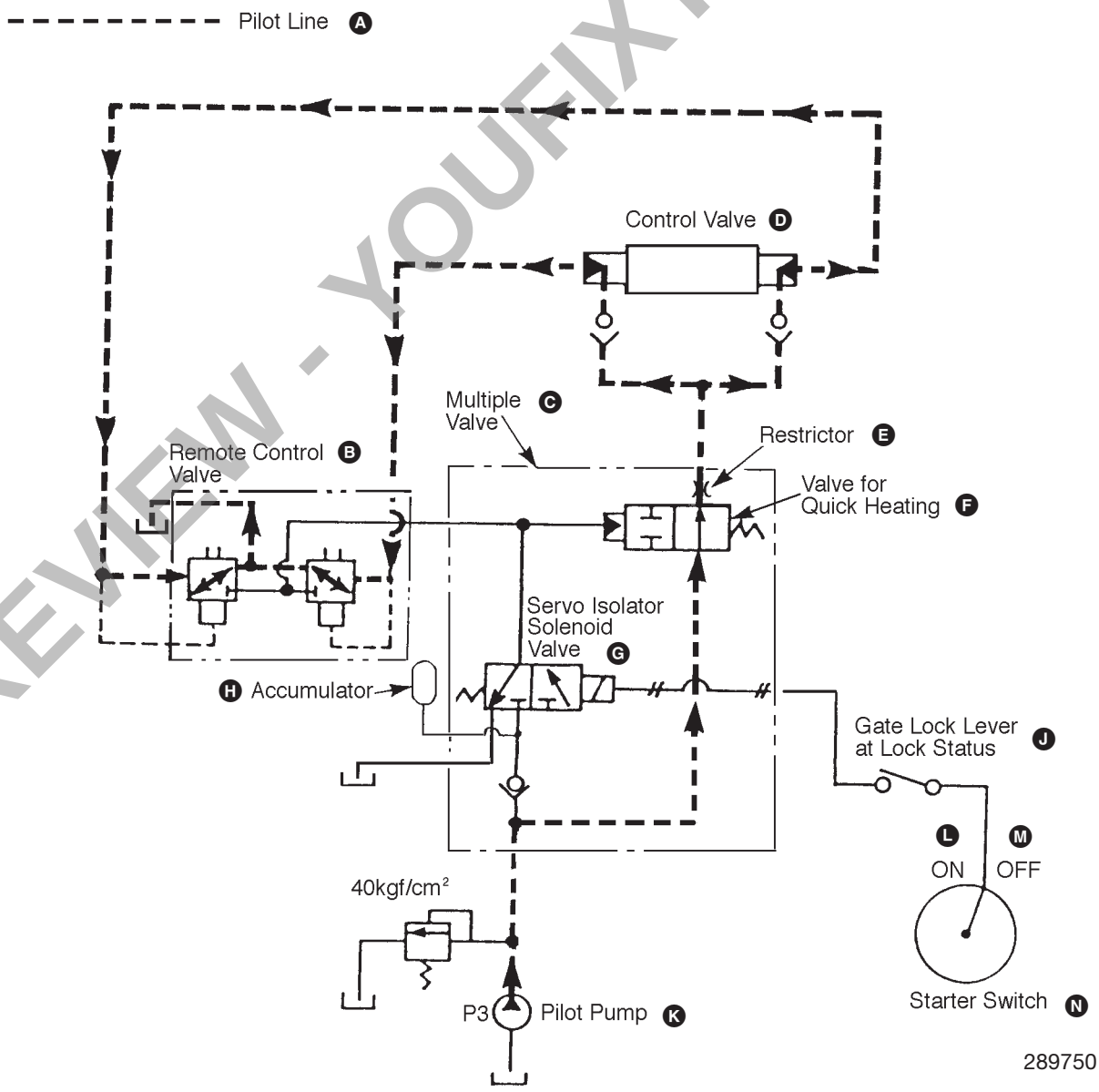

PREVIEW - YOUFIXTHIS.COM

Download full manual at youfixthis.com

Boom Arm Anti-drift Valve

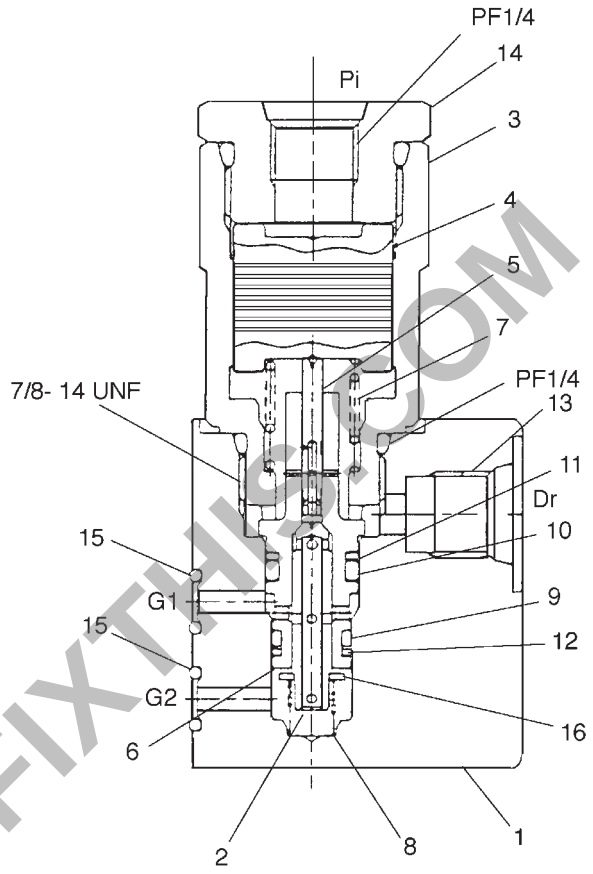

Dismantling the Boom /Dipper Anti-drift Valve

1 Loosen the plug assembly (14) and remove the O-ring.

2 Remove the piston (4), the spool (5) and the spring (7).

3 Carefully loosen the plug (3) and remove the O-ring (13). Care must be taken to avoid components being propelled out of the valve by the remaining inner pressure.

4 Remove the sleeve (16) and the poppet (2). Remove the O-rings (9, 10) on the sleeve and the back-up rings (11, 12).

5 Remove the spring seat (16) and the spring (8) from the spring groove.

6 Loosen the socket head bolts (42) and remove the body (51-1) from the main body. Remove the O-rings (15) on the mating face.

7 Remove the spacer (55) from the valve housing. remove the O-ring (56) and the back up ring (57).

8 Remove the spring (54) and the poppet (53).

Cleaning / Inspection

1 Clean the dismantled parts with a coating of clean oil.

2 Dry with compressed air. Place each part on a clean sheet of paper or vinyl for inspection.

3 Verify that all sliding parts move easily.

4 Replace the springs if they are damaged, deformed or worn.

5 Replace all used O-rings and back-up rings with new before assembly.

6 Check that there is no foreign matter in any passages or grooves.

Assembling the Boom/Dipper Anti-Drift Valve

1 Install the O-rings (9, 10) and the back-up rings (11, 12) to the outside groove of the sleeve (6).

2 Insert the poppet (2) and the spool (5) into the sleeve socket.

3 Apply grease to the components. Install the spring (8) and the spring seat (16) on the smaller end of the poppet. Compress the spring, spring seat and sleeve into the body socket (1).

4 Install the spring (7) and the piston (4) on the plug (51-3)

5 Tighten the plug assembly (14) with the O-ring installed on the plug (3).
Torque tighten to 69 - 78 Nm (50.8 - 57.5 lbf ft).

6 Tighten the plug assembly (51-13) with the O-ring installed on the body (1).
Torque tighten to 69 - 78 Nm (50.8 - 57.5 lbf ft).

7 Install the O-ring (15) to the groove on the mating face with the body.

PREVIEW - YOUFIXTHIS.COM

Download full manual at youfixthis.com

Fault Finding (cont'd)

Item	Symptoms	Related Parts	Trouble	Treatment
1	Piston rod oil leakage	Rod packing (Buffer ring, U-ring)	Packing rubber is perished.	The packing life or hydraulic oil deterioration and high temperature are possible reasons. **1** Renew hydraulic oil. **2.** Check the hydraulic oil temperature. (Below 80° C is advisable). **3** Check if high temperature locally.
			Lip is deficient all around.	Renew. It is possible that abnormally high pressure is working on the packing. **1** Check the operation pressure, cushion pressure. **2** Part which is attached to the buffer ring may be abnormal. Inspect the buffer ring.
		Back up ring	The protrusion of the heel of the packing is excessive.	As a rule, renew the rod packing at the same time. (It is desirable to renew parts which are attached to the buffer ring at the same time). It is possible that abnormally high pressure is the cause. Check the same as above (heel of packing protruding).
		Wiper ring	Foreign matter is biting into the lip. The lip is damaged.	Remove the foreign matter.
			There is also other abnormal damage.	Renew.
		Bushing	Wear is excessive and the clearance with piston rod exceeds the maximum permissible value. (Refer to maintenance standards for maximum permissible value.)	Renew.
			Large scratch on the sliding part.	Renew. Also inspect the piston rod.
		Cylinder head	Scratches, rust on the seal attachment parts.	Remove scratch, rust with oil stone. If it cannot be repaired, renew the cylinder head.

PREVIEW - YOUFIXTHIS.COM

Download full manual at youfixthis.com

Dismantling (cont'd)

48 Remove swash plate **103**.

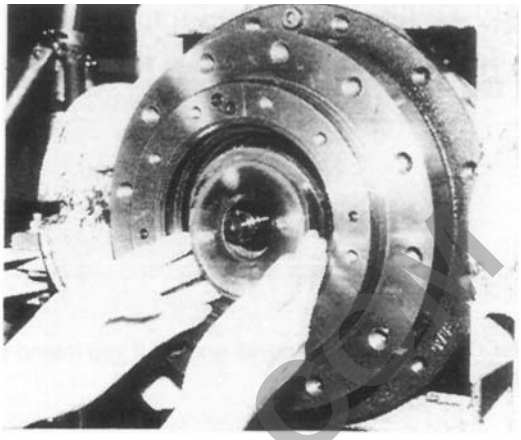

49 Tap shaft **102** from the reduction gear side and remove from spindle **2** complete with bearing **149**.

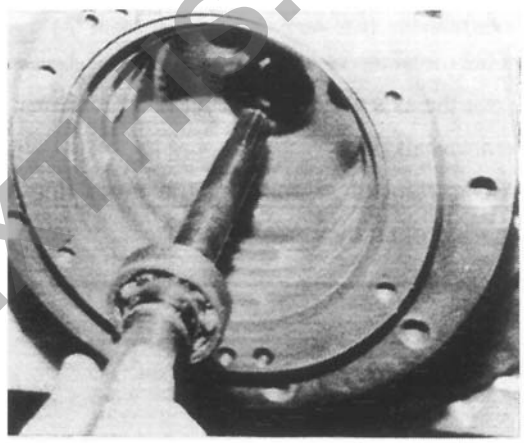

50 Connect a hydraulic hand pump (see Service Tools, Section 1) to the speed change port of the spindle and use it to force out piston **161**/piston shoe **162** assembly. The whole assembly must be replaced in the event of damage to either part.

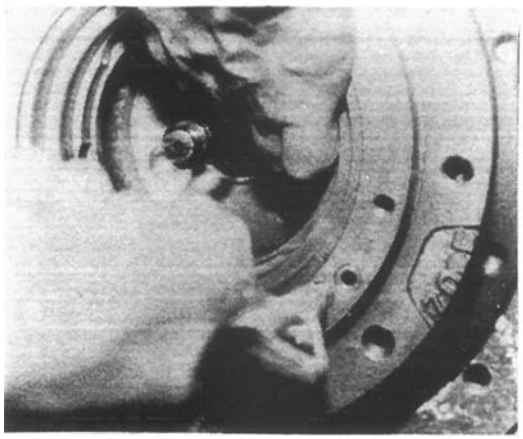

51 Remove bearing **149** from shaft **102** only if it is to be renewed. To remove it use special tool II (B) (see Special Tools, Section 1) as shown. Press out the shaft from the bearing.

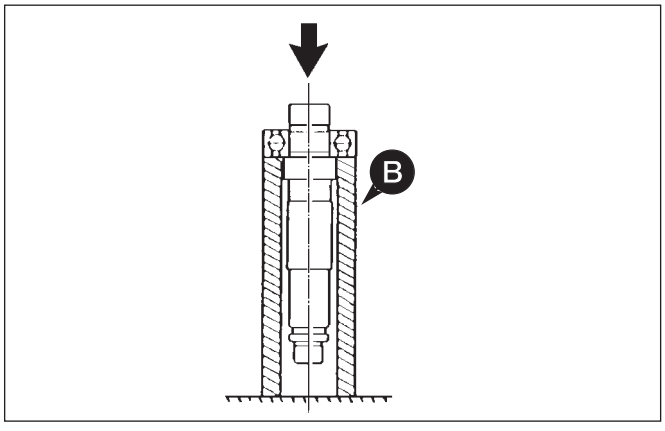

PREVIEW - YOUFIXTHIS.COM

Download full manual at youfixthis.com

PREVIEW ONLY

You're viewing 17 of 385 pages

The full manual includes:

- All 385 pages, complete
- Searchable PDF (find any keyword)
- No watermarks
- Instant download
- Print-ready quality

GET FULL MANUAL NOW

JCB JS70, Isuzu 4JB1 PAA-04 Service Manual

Scan or click anywhere
youfixthis.com

Click anywhere on this page to get the full manual