Service Manual

VMD70/VMD100

Section 1 - General Information

Section 2 - Care and Safety

Section 3 - Routine Maintenance

Section B - Body and Framework

Section C - Electrics

Section E - Hydraulics

Section K - Engine

Section L - Vibration

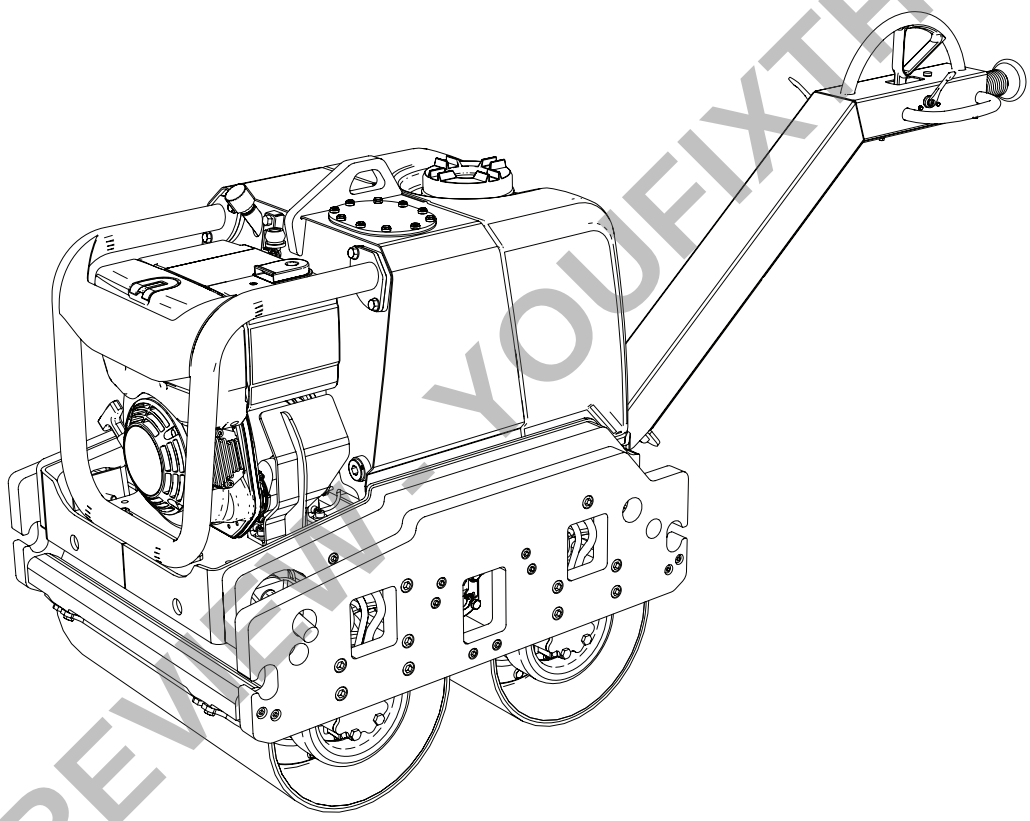

PREVIEW - YOUFIXTHIS.COM

Publication No.
9813/0300-3



Copyright © 2004 JCB SERVICE. All rights reserved. No part of this publication may be reproduced, stored in a retrieval system, or transmitted in any form or by any other means, electronic, mechanical, photocopying or otherwise, without prior permission from JCB SERVICE.

Issued by JCB Technical Publications, JCB Aftermarket Training, Woodseat, Rocester, Staffordshire, ST14 5BW, England. Tel +44 1889 591300 Fax +44 1889 591400

World Class
Customer Support

Download full manual at youfixthis.com

Contents **Page No.**

Introduction
About This Manual 1-1
Machine Model and Serial Number 1-1
Using the Service Manual 1-1
Section Numbering 1-1
Left Side, Right Side 1-1
Cross References 1-2
Identifying Your Machine 1-3
Machine Identification Plate 1-3
Component Identification Plates 1-3

Service Tools
Numerical List 1-5
Tool Detail Reference 1-6
Section B - Body and Framework 1-6
Section C - Electrics 1-8
Section E - Hydraulics 1-9
Section L - Vibration 1-13

Torque Settings
Zinc Plated Fasteners and Dacromet Fasteners 1-15
Introduction 1-15
Bolts and Screws 1-15
Hydraulic Connections 1-19
'O' Ring Face Seal System 1-19
'Torque Stop' Hose System 1-22

Service Consumables
Sealing and Retaining Compounds 1-23

PREVIEW - YOUFIXTHIS.COM

Download full manual at youfixthis.com

Identifying Your Machine

Machine Identification Plate

Your machine has an identification plate mounted as shown. ⇒ *Fig 1. (1-3)*.

The machine and engine serial numbers can help identify exactly the type of equipment you have.

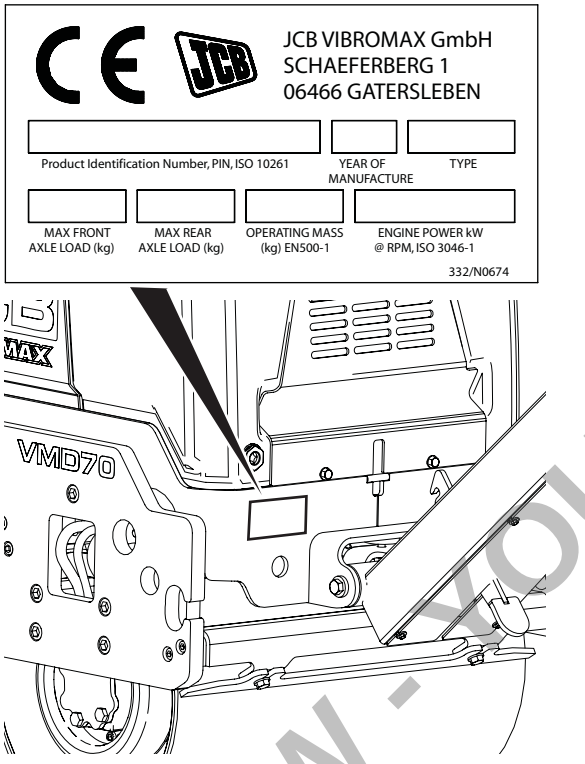

Fig 1.

Typical Product Identification Number (PIN)

1	2	3	4
JCB	VMD	C	02802400

1 World Manufacturer Code (JCB)

2 Machine Type and Model

3 Randomly Generated Check Letter

4 Machine Serial Number (02802400)

Component Identification Plates

Engine Identification Plate

The engine serial number is located on the engine crankcase next to the dipstick.

PREVIEW - YOUFIXTHIS.COM

Download full manual at youfixthis.com

Schematic Circuit

HATZ Engine Electrical Schematic - All Machines

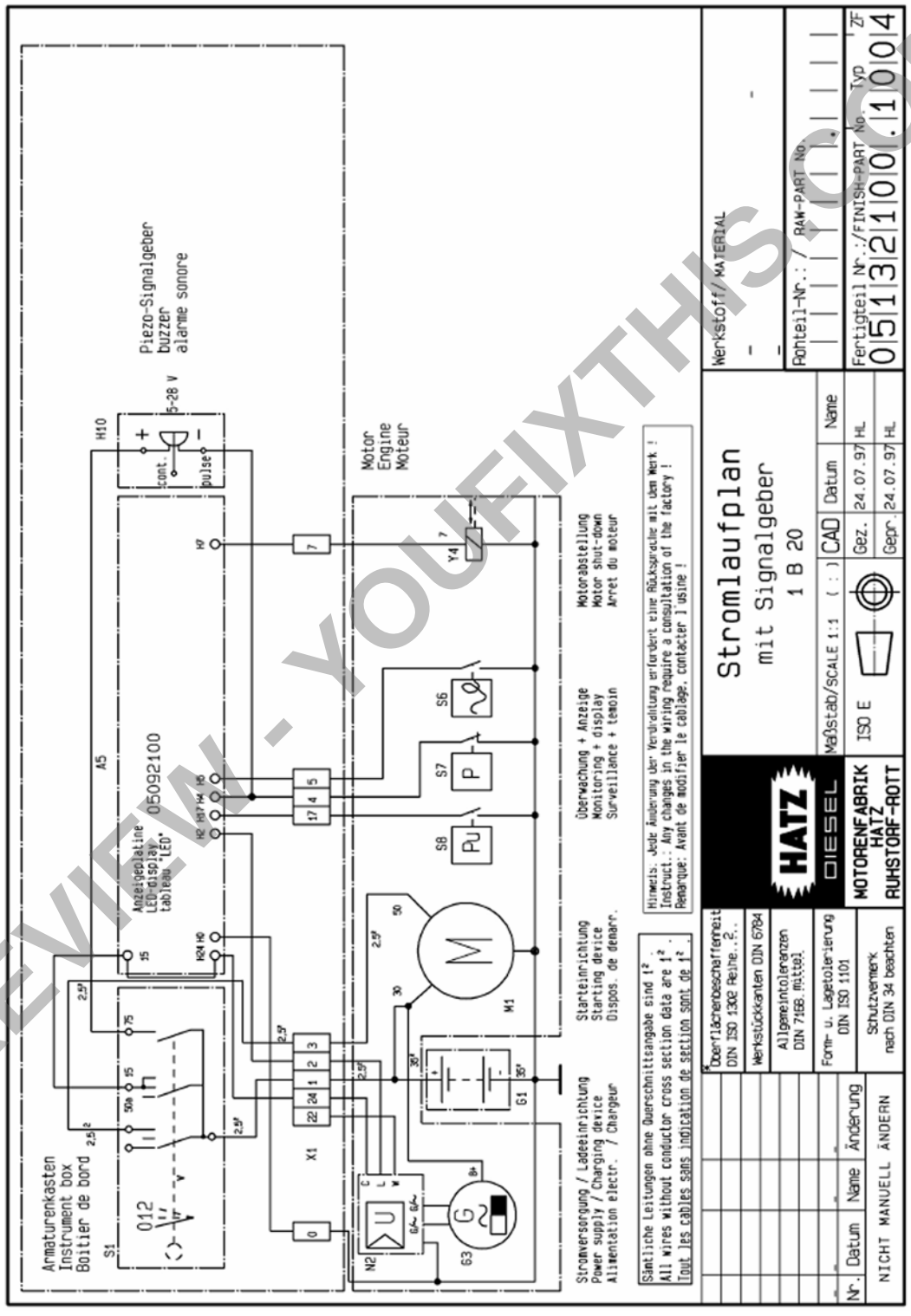

T053120

Fig 1.

PREVIEW - YOUFIXTHIS.COM

Download full manual at youfixthis.com

All Machines

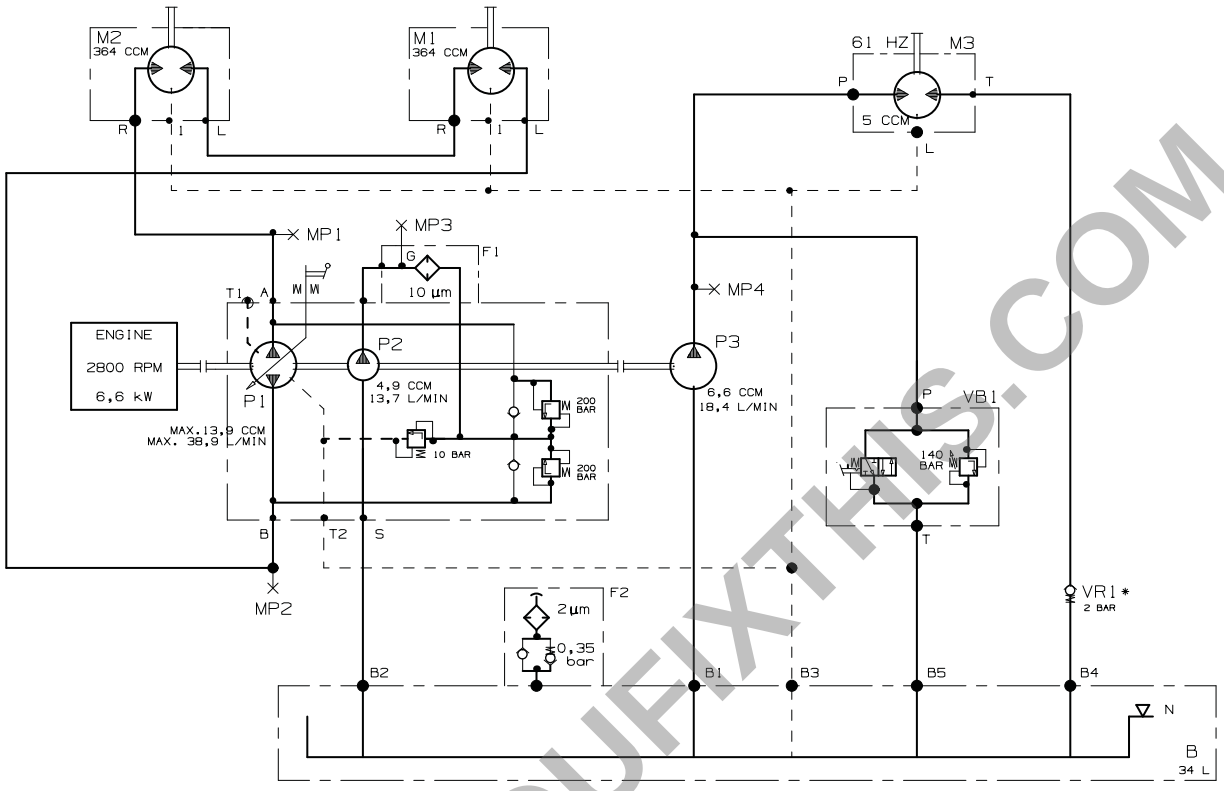

Fig 1. 332/N2000-4

Table 1. Components

Item	Description
P1	Drive Pump
P2	Charge Pump
P3	Vibration Pump
M1/M2	Drive Motor
M3	Vibration Motor
VB1	Vibration Control Block
F1	Filter
F2	Input and Breather Filter
B	Hydraulic Tank
N	Level Indicator

Table 2. Test Points

Item	Description
MP1	Driving Forwards
MP2	Driving Backwards
MP3	Charge Pressure
MP4	Vibration Pressure

PREVIEW - YOUFIXTHIS.COM

Download full manual at youfixthis.com

Engine Coupling/Clutch

Description

The coupling/clutch consists of a bell housing **A** to which the drive/charge pump is bolted. The bell housing is bolted to the engine and remains fixed. Inside the bell housing there is the coupling **B** to which the pump drive shaft is attached. This is free to rotate. A centrifugal clutch consisting of 2 x clutch shoes **C** and 2 x springs **D** is attached to the engine output shaft. ⇨ *Fig 1. (E-19)*.

At engine idle speed (800 rpm) there is insufficient centrifugal force to force the clutch shoes against the coupling. The clutch shoes rotate independently from the coupling. At full engine speed (2800 rpm) centrifugal force is sufficient to force the clutch shoes against the coupling. The clutch shoes cause the coupling to rotate.

Important: *Operating the engine for extended periods between idle speed and full engine speed can cause the clutch shoes to excessively slip on the coupling causing premature wear.*

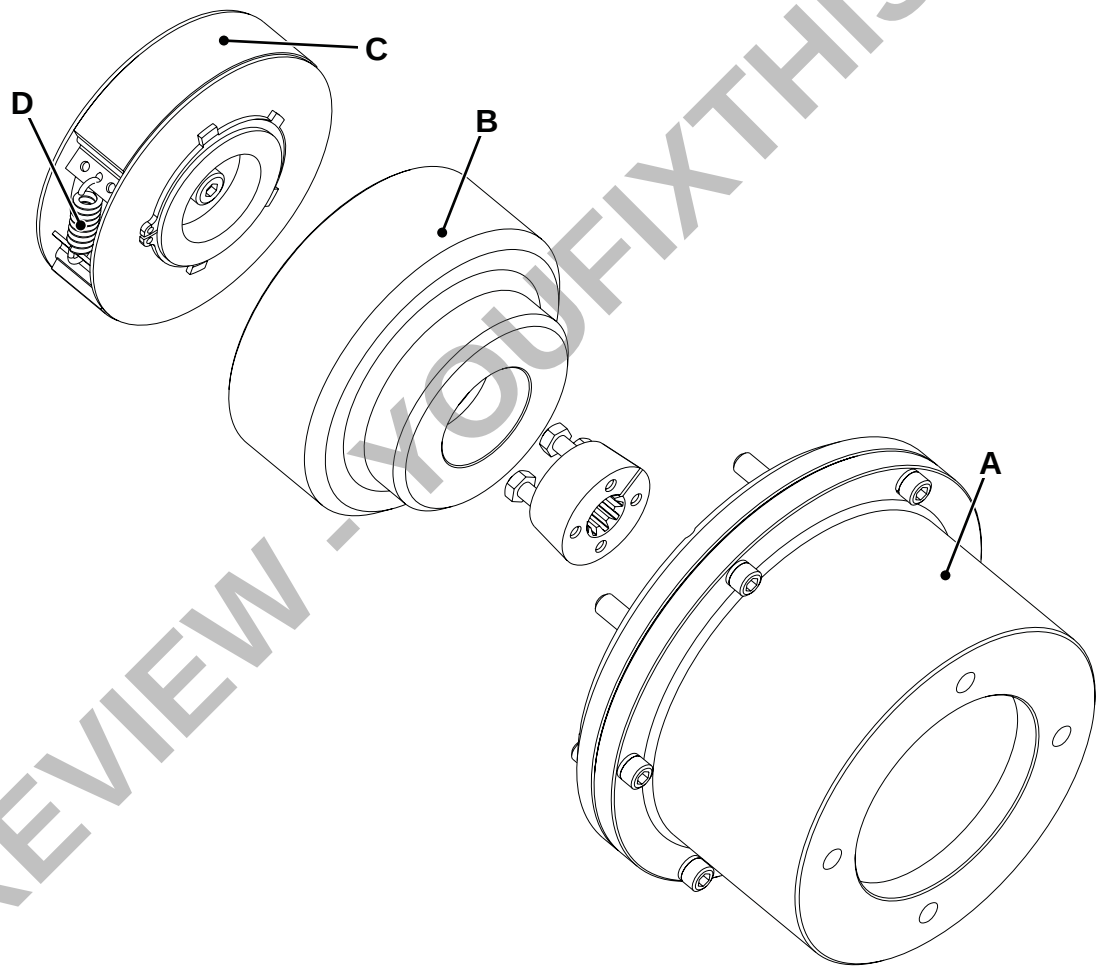

T053150-2

Fig 1.

Table 1.

Item	Description
A	Bell Housing
B	Coupling
C	Clutch Shoes
D	Clutch Springs

PREVIEW - YOUFIXTHIS.COM

Download full manual at youfixthis.com

Zinc Plated Fasteners and Dacromet Fasteners

Table 2. Torque Settings - UNF Grade 'S' Fasteners

Bolt Size		Hexagon (A/F)	Condition 1			Condition 2		
in.	mm	in.	Nm	kgf m	lbf ft	Nm	kgf m	lbf ft
1/4	6.3	7/16	11.2	1.1	8.3	10.0	1.0	7.4
5/16	7.9	1/2	22.3	2.3	16.4	20.0	2.0	14.7
3/8	9.5	9/16	40.0	4.1	29.5	36.0	3.7	26.5
7/16	11.1	5/8	64.0	6.5	47.2	57.0	5.8	42.0
1/2	12.7	3/4	98.00	10.0	72.3	88.0	9.0	64.9
9/16	14.3	13/16	140.0	14.3	103.2	126.0	12.8	92.9
5/8	15.9	15/16	196.0	20.0	144.6	177.0	18.0	130.5
3/4	19.0	1 1/8	343.0	35.0	253.0	309.0	31.5	227.9
7/8	22.2	1 15/16	547.0	55.8	403.4	492.0	50.2	362.9
1	25.4	1 1/2	814.0	83.0	600.4	732.0	74.6	539.9
1 1/8	31.7	1 7/8	1181.0	120.4	871.1	1063.0	108.4	784.0
1 1/4	38.1	2 1/4	1646.0	167.8	1214.0	1481.0	151.0	1092.3

Table 3. Torque Settings - Metric Grade 8.8 Fasteners

Bolt Size		Hexagon (A/F)	Condition 1			Condition 2		
ISO Metric Thread	mm	mm	Nm	kgf m	lbf ft	Nm	kgf m	lbf ft
M5	5	8	5.8	0.6	4.3	5.2	0.5	3.8
M6	6	10	9.9	1.0	7.3	9.0	0.9	6.6
M8	8	13	24.0	2.4	17.7	22.0	2.2	16.2
M10	10	17	47.0	4.8	34.7	43.0	4.4	31.7
M12	12	19	83.0	8.5	61.2	74.0	7.5	54.6
M16	16	24	205.0	20.9	151.2	184.0	18.8	135.7
M20	20	30	400.0	40.8	295.0	360.0	36.7	265.5
M24	24	36	690.0	70.4	508.9	621.0	63.3	458.0
M30	30	46	1372.0	139.9	1011.9	1235.0	125.9	910.9
M36	36	55	2399.0	244.6	1769.4	2159.0	220.0	1592.4

PREVIEW - YOUFIXTHIS.COM

Download full manual at youfixthis.com

Hydraulic Travel System Fault Diagnosis Tables

Table 1. No Travel Drive

Fault	Probable Cause	Action
No travel drive	Control linkage bent, loose or out of adjustment	Repair, adjust or replace linkage
	Oil level low	Fill reservoir to correct level
	Inlet leak	Check all external lines and connections to pump inlet
	Engine speed too slow (centrifugal clutch)	Increase engine speed to maximum
	Charge circuit pressure incorrect	Check charge circuit pressure
	No pressure in drive circuit	Check drive circuit pressure
	Blockage on suction side of hydraulic circuit	Check suction side of circuit for blockage (kink in hose etc.)
Drive pressure low	High Internal leakage across motor M1 or M2	⇨ *Internal Leakage (📄 E-3)*
	Incorrect relief valve setting	Replace relief valve(s)
	Pump P1 low flow	Flow test pump P1
	Low engine speed	Set engine speed to maximum
	Blockage in hydraulic circuit	Check circuit for blockage (kink in hose etc.)
	Kink or leak in hose	Check all hoses for kinks and leaks
Drive pressure high	Kink in hose	Check all hoses for kinks
	Incorrect relief valve setting	Replace relief valve(s)
	High engine speed	Adjust maximum engine speed to 2800rpm

Table 2. Unit is noisy

Fault	Probable Cause	Action
Unit is noisy	Excessive input speed	Adjust to correct rpm setting (see Yanmar engine manual)
	Oil level low or oil is contaminated	Fill reservoir to proper level or change oil
	Excessive loading	End the cause of excessive loading
	Air trapped in hydraulic system	Purge hydraulic system as per procedure
	Inlet leak, line or filter partially blocked or damaged	Check all external lines and connections and filter to pump inlet.

PREVIEW - YOUFIXTHIS.COM

Download full manual at youfixthis.com

Fluids, Lubricants and Capacities

Table 1.

ITEM	CAPACITY Litres (UK Gal)	FLUID/LUBRICANT	INTERNATIONAL SPECIFICATION	JCB Part No.	Container Size(1)
Fuel Tank	5 (1.1)	Diesel.	Diesel. ⇒ *Fuel (12)*.	-	-
Engine (Oil)	1.5 (0.3)	JCB Engine Oil EP 15W40	ACEA E5/B3/A3, API CH-4/SJ	4001/1505	20 Litres
Hydraulic System	35 (7.7)	JCB Optimum Performance Hydraulic Fluid 46 (Multigrade)(2)	HLP 46 DIN 51524	4002/2005	20 Litres
Drive Motor	-	Sealed for life	Sealed for life	-	-
Vibration System	0.15 (0.003)(VMD70) 0.2 (0.004)(VM100)	JCB Optimum Performance Gear Oil	CLP 100 DIN 51517	4000/3701	5 Litres
Sprinkling Device front/rear	70 (15.4)	Water	-	-	-

(1) For information about the different container sizes that are available (and their part numbers), contact your JCB dealer
(2) JCB recommend that only JCB Optimum Performance 46 (Multigrade) oil is used. This provides the recommended viscosity oil across the operating temperature range. However, recognising that multigrade oils are not always available in some regions, the chart below advises the best monograde type oil, e.g. HP32, HP46 or HP68 depending on the region in which the machine is working, and the ambient temperatures.

Table 2.

Ambient Temperature	°C	-10	-5	+5		+15			+25					+35		+46	
Oil temperature	°C	0	5	10	12	15	20	25	30	35	40	50	60	70	80	90	100

HP 68 (Monograde)
HP 46 (Monograde)
HP 32 (Monograde)
Optimum Performance 46 (Multigrade)

PREVIEW - YOUFIXTHIS.COM

Download full manual at youfixthis.com

Pre-start Cold Checks, Service Points and Fluid Levels

	Operation	10	50	250	500	1000	2000
ENGINE							
'Air filter blocked' indicator	Check	☐	☐	☐	☐	☐	☐
Air filter[1]	Change				☐	☐	☐
Oil level	Check	☐	☐	☐	☐	☐	☐
Oil[2]	Change			☐	☐	☐	☐
Oil filter	Clean					☐	☐
Water sedimenter	Drain	☐	☐	☐	☐	☐	☐
Engine mounting bolts for tightness[2]	Check			☐	☐	☐	☐
Fuel filler cap	Check for leaks	☐	☐	☐	☐	☐	☐
Fuel tank	Drain/Clean				☐	☐	☐
Fuel cartridge filter	Change				☐	☐	☐
Clean combustion and cooling air intake zone	Clean	☐	☐	☐	☐	☐	☐
Mesh exhaust insert	Clean			☐	☐	☐	☐
Valve clearance[2]	Check/Adjust			☐	☐	☐	☐
DRUM							
Vibration performance	Check		☐	☐	☐	☐	☐
HYDRAULICS							
Fluid level	Check	☐	☐	☐	☐	☐	☐
Fluid and filter	Change					☐	☐
Breather filter element	Check/Clean					☐	☐
Hoses - for leaks	Check			☐	☐	☐	☐
BODY AND FRAMEWORK							
Vibration rubbers	Check		☐	☐	☐	☐	☐
Safety labels	Check		☐	☐	☐	☐	☐
Paintwork	Check		☐	☐	☐	☐	☐
Water tank strainer	Check/Clean			☐	☐	☐	☐
Visual inspection of lifting points (welds and steelwork)	Check	☐	☐	☐	☐	☐	☐
Visual inspection of articulation joint and lock (welds, pivot points, pivot pins and steelwork)	Check	☐	☐	☐	☐	☐	☐

PREVIEW - YOUFIXTHIS.COM

Download full manual at youfixthis.com

Removal and Replacement

Removal

1 Make the machine safe. ⇨ *How to Make the Machine Safe (1-13)*.

2 Remove the water tank. ⇨ *Water Tank (B-2)*.

3 Remove the hydraulic tank. ⇨ *Hydraulic Oil Tank (E-21)*.

4 Disconnect all hoses and cables from the pumps.

5 Remove the 2 x bolts securing the pumps to the engine coupling/clutch.

6 Remove the pump assemblies.

Replacement

Replacement is a reversal of the removal procedure.

PREVIEW - YOUFIXTHIS.COM

Download full manual at youfixthis.com

Safety Notices

Important Information

T1-042

The Operator Manual

⚠ WARNING

You and others can be killed or seriously injured if you operate or maintain the machine without first studying the Operator Manual. You must understand and follow the instructions in the Operator Manual. If you do not understand anything, ask your employer or JCB dealer to explain it.

INT-1-4-2

Do not operate the machine without an Operator Manual, or if there is anything on the machine you do not understand.

Treat the Operator Manual as part of the machine. Keep it clean and in good condition. Replace the Operator Manual immediately if it is lost, damaged or becomes unreadable.

Safety Warnings



This safety alert system identifies important safety messages in this manual. When you see this symbol, be alert, your safety is involved, carefuly read the message that follows, and inform other operators.

In this publication and on the machine, there are safety notices. Each notice starts with a signal word. The signal word meanings are given below.

⚠ DANGER

Denotes an extreme hazard exists. If proper precautions are not taken, it is highly probable that the operator (or others) could be killed or seriously injured.

INT-1-2-1

⚠ WARNING

Denotes a hazard exists. If proper precautions are not taken, the operator (or others) could be killed or seriously injured.

INT-1-2-2

⚠ CAUTION

Denotes a reminder of safety practices. Failure to follow these safety practices could result in injury to the operator (or others) and possible damage to the machine.

INT-1-2-3

PREVIEW - YOUFIXTHIS.COM

Download full manual at youfixthis.com

PREVIEW ONLY

You're viewing 12 of 167 pages

The full manual includes:

- All 167 pages, complete
- Searchable PDF (find any keyword)
- No watermarks
- Instant download
- Print-ready quality

GET FULL MANUAL NOW

JCB VMD70, VMD100, VMD70/VMD100, VMD 70/100, HATZ 1B40 Service Manual

Scan or click anywhere
youfixthis.com

Click anywhere on this page to get the full manual