Cab Layout

Component Key

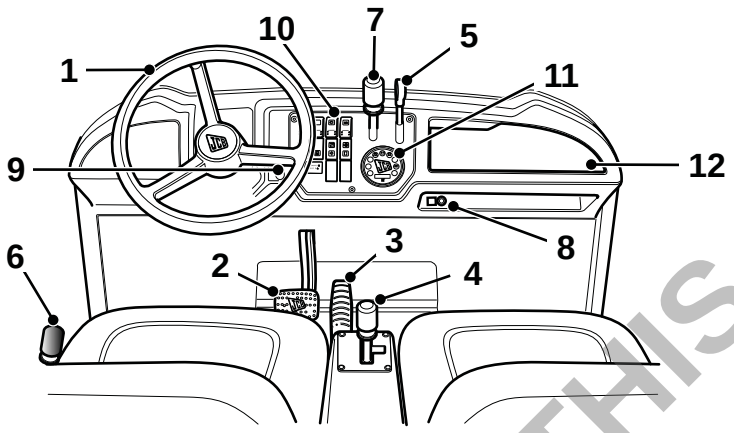

T017450-1

Fig 9.

1 ⇨ *Steering Wheel (36)*
2 ⇨ *Brake Pedal (36)*
3 ⇨ *Accelerator Pedal (36)*
4 ⇨ *Forward/Reverse Lever (36)*
5 ⇨ *Four Wheel Drive Lever (37)*
6 ⇨ *Park Brake Lever (37)*
7 ⇨ *Differential Lock Lever (37)*
8 ⇨ *Release Catch (37)*
9 ⇨ *Starter Switch (40)*
10 ⇨ *Console Switches (38)*
11 ⇨ *Display Panel (40)*
12 ⇨ *Auxiliary Power Socket (42)*

The illustration shows a typical machine, your machine may look different from the model shown.

PREVIEW - YOUFIXTHIS.COM

Download full manual at youfixthis.com

Pre-start Cold Checks, Service Points and Fluid Levels

	Operation	10	50	100(1)	250	500	1000	2000
ENGINE								
Engine Mount - Security	- Check			☐		☐	☐	☐
Engine Oil and Filter(2)	- Change			☐	☐	☐	☐	☐
Engine Oil	- Check	☐	☐	☐	☐	☐	☐	☐
Engine Valve Rocker Arms - Clearance(3)	- Check/Adjust					☐	☐	☐
Injector Settings(3)	- Check/Clean						☐	☐
Coolant - Level and Antifreeze Strength	- Check	☐	☐	☐	☐	☐	☐	☐
Coolant(4)	- Change						☐	☐
Air Cleaner	- Clean	☐	☐	☐	☐	☐	☐	☐
Air Cleaner Element(5)	- Change					☐	☐	☐
Air Cleaner Dust Valve	- Clean		☐	☐	☐	☐	☐	☐
Cylinder Head Nuts(3) - Tightness	- Check					☐	☐	☐
Alternator Drive Belt - Tension/Condition	- Check				☐	☐	☐	☐
Alternator Drive Belt(6)	- Change					☐	☐	☐
Fuel Filter	- Change				☐	☐	☐	☐
Cooling System Hoses - Condition/Security	- Check		☐	☐	☐	☐	☐	☐
Air Cleaner and Intake Manifold Hose - Condition/ Security	- Check		☐	☐	☐	☐	☐	☐
Fuel System - Leaks and Contamination	- Check	☐	☐	☐	☐	☐	☐	☐
External Oil Leaks	- Check	☐	☐	☐	☐	☐	☐	☐
Radiator	- Clean	☐	☐	☐	☐	☐	☐	☐
Fuel Pipes	- Change						☐	☐
Engine Timing Belt(7)(3)	- Change							
Glow Plugs(3)	- Check					☐	☐	☐
ELECTRICS								
Battery - Electrolyte Level (If Applicable)	- Check				☐	☐	☐	☐
Battery - Charge Condition	- Check				☐	☐	☐	☐
Battery Terminals - Condition/Tightness	- Check		☐	☐	☐	☐	☐	☐
Wiring for Chafing/Routing	- Check	☐	☐	☐	☐	☐	☐	☐

PREVIEW - YOUFIXTHIS.COM

Download full manual at youfixthis.com

Safety Notices

Important Information

T1-042

The Operator Manual

WARNING

You and others can be killed or seriously injured if you operate or maintain the machine without first studying the Operator Manual. You must understand and follow the instructions in the Operator Manual. If you do not understand anything, ask your employer or JCB dealer to explain it.

INT-1-4-2

Do not operate the machine without an Operator Manual, or if there is anything on the machine you do not understand.

Treat the Operator Manual as part of the machine. Keep it clean and in good condition. Replace the Operator Manual immediately if it is lost, damaged or becomes unreadable.

Safety Warnings



This safety alert system identifies important safety messages in this manual. When you see this symbol, be alert, your safety is involved, carefully read the message that follows, and inform other operators.

In this publication and on the machine, there are safety notices. Each notice starts with a signal word. The signal word meanings are given below.

DANGER

Denotes an extreme hazard exists. If proper precautions are not taken, it is highly probable that the operator (or others) could be killed or seriously injured.

INT-1-2-1

WARNING

Denotes a hazard exists. If proper precautions are not taken, the operator (or others) could be killed or seriously injured.

INT-1-2-2

CAUTION

Denotes a reminder of safety practices. Failure to follow these safety practices could result in injury to the operator (or others) and possible damage to the machine.

INT-1-2-3

PREVIEW - YOUFIXTHIS.COM

Download full manual at youfixthis.com

Specifications

Static Dimensions

Load Bay

Length	1046 mm	41.81 in.
Width	1384 mm	54.48 in.
Depth	235 mm	9.25 in.
Capacity	500 kg	1102 lb.
Volume	1.34 m	47.3 ft
Tipping angle	55 degrees	

Workmax 1000D

	Description	mm (in.)
A	Overall length	2914 (114.72)
B	Overall height (excluding ancillaries)	1954 (76.92)
C	Minimum ground clearance	228 (8.97)
D	Overall width	1491 (58.7)
E	Wheel base (front-rear)	1950 (76.77)
F	Wheel track front and rear	1229 (48.38)
	Turning circle	7440 (292.9)

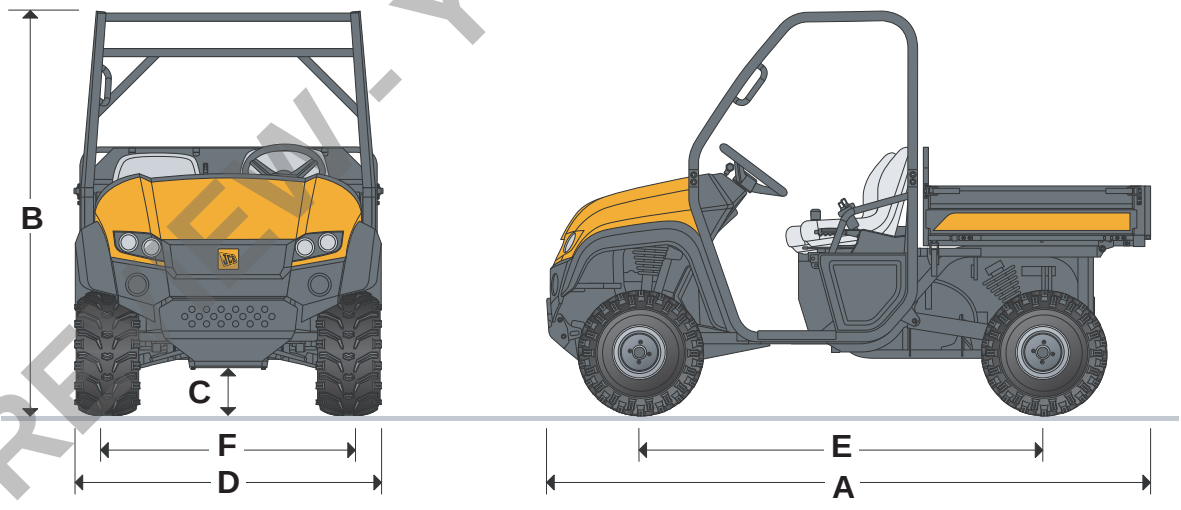

T024580

Fig 1. Workmax 1000D

PREVIEW - YOUFIXTHIS.COM

Download full manual at youfixthis.com

Fluids, Lubricants and Capacities

Specifications

JCB recommend that you use the JCB lubricants shown as they have been verified by JCB for use on JCB machines. However, you could use other lubricants that are equivalent to the JCB standards and quality or offer the same machine component protection.

Table 4.

Item	Capacity		Fluid/Lubricant	JCB Part Number	Container Size(1)
	Litres	Gal			
Fuel	37	8.1	Diesel (refer to ***Types of Fuel***)		
Engine Oil(2) (plus the filter)	2.6	0.57	JCB Engine Oil EP 15W40 (above -10°C)	4001/1805	20L
Front Differential Oil	1.0	0.22	JCB Gear Oil HP90	4000/0305	20L
Rear Differential Oil	1.0	0.22	JCB Gear Oil HP90	4000/0305	20L
Engine (Coolant)	5.0	1.1	JCB Antifreeze HP/Coolant	4006/1120	20L
Gearbox	1.2	0.26	JCB Universal Agricultural Oil	4004/0305	20L
Brake Fluid	0.5	0.1	JCB Brake Fluid, Dot 4	4002/0404	1L
Hydraulic Tipper Oil (If installed)	1.0	0.22	JCB Hydraulic Fluid HP46	4002/0805	20L
Grease	As Required		JCB Special HP Grease(3)	4003/2017	400g x24
			JCB Special MPL-EP Grease	4003/1501	400g x24

(1) For information about the different container sizes that are available (and their part numbers), contact your JCB Dealer.
(2) Do not use ordinary engine oil.
(3) JCB Special HP Grease is the recommended specification grease. If JCB Special MPL-EP Grease is used, all 50 hour greasing operations must be done at 10 hour intervals, all 500 hour greasing operations must be done at 50 hour intervals.

PREVIEW - YOUFIXTHIS.COM

Download full manual at youfixthis.com

Component Location

Note: *The illustration(s) show a typical machine model; your machine may look different from the model shown.*

1 Fuel tank (Behind the side panel)

2 Diesel filler point

3 Tow hitch (Optional)

4 Load Bay

5 Roll Over Protection Structure (ROPS)

6 Mirrors (Optional)

7 Beacon (Optional)

8 Front and rear work lights (Optional)

9 Battery (Behind the side panel)

10 Front access panel

11 Engine (Below the load bay)

12 Gearbox (Below the load bay)

13 Air filter

Note: *The component layout in the engine bay can vary, dependant on your machine model.* ***⇨ Fig 2. (🗋 5)*** *and* ***⇨ Fig 3. (🗋 6)***.

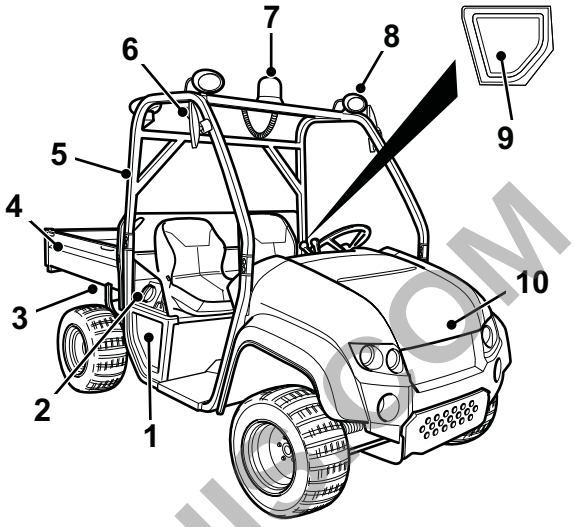

T019330-1

Fig 1.

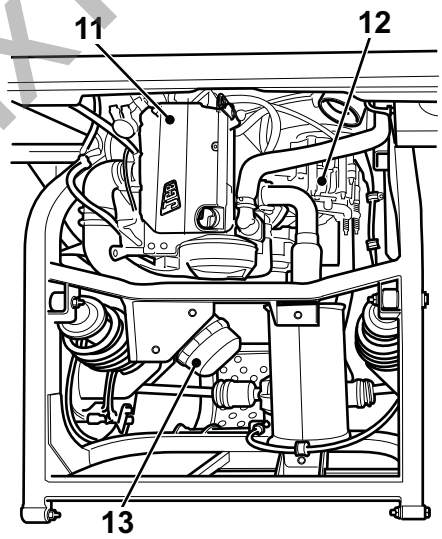

T019330-9

Fig 2.

PREVIEW - YOUFIXTHIS.COM

Download full manual at youfixthis.com

Checking the Wheel Nut Torques

⚠ WARNING

If, for whatever reason, a wheel stud is renewed, all the studs for that wheel must be changed as a set, since the remaining studs may have been damaged.

2-3-2-8

When the machine is new or a wheel is removed, check the wheel nut torques at two hour intervals until the torque values are constant.

Each day before work, make sure that the wheel nuts torques are correct. The correct torques are shown in the table below.

Table 7.

Front		Rear		Hub	
Nm	**lbf ft**	**Nm**	**lbf ft**	**Nm**	**lbf ft**
120	88	120	88	250	184

Replace a Wheel

1 Make the machine safe. Refer to ***Make the Machine Safe***.

2 Put blocks on each side on the wheels that are not being removed.

3 Loosen the wheel nuts.

4 Put the jack in position below the machine:

Rear wheels: Below the engine sub-frame or the suspension arms.

Front wheels: Below the skid plate or the suspension wishbone.

5 Operate the jack to lift the machine to a height sufficient to remove the wheel.

6 Remove the nuts and the wheel.

7 To replace the wheel, do the reverse of the removal procedure.

8 Torque the wheel nuts.

PREVIEW - YOUFIXTHIS.COM

Download full manual at youfixthis.com

Power Steering System

If the power steering system warning light illuminates, stop and park the machine as soon as it is safe to do so.

Note: *It is still possible to steer the machine without power steering.*

1 Engage the park brake and stop the engine.

2 Re-start the engine.

3 Make sure the power steering indicator light goes off after approximately 2 seconds.

Note: *The light will come on briefly at engine start while the power steering system does a diagnostic self check.*

4 If the indicator light does not go off after approximately 2 seconds, then there is a permanent fault and the steering will not be power assisted. Contact your local JCB Dealer.

PREVIEW - YOUFIXTHIS.COM

Download full manual at youfixthis.com

Starting the Engine

Read and comply with ***Before Starting the Engine***.

Note: *The machine will not start unless the machine is in neutral and the park brake is engaged.*

1 Make sure that the transmission is in the neutral position.

Note: *Do not operate the starter motor for longer than 10 seconds at a time. If the engine does not start, let the starter motor cool for 40 seconds, then try again.*

2 Turn the starter key to the I position.

3 When the engine pre-heat light goes out, turn the starter key to the **III** position to start the engine.

4 When the engine starts, release the starter key, which will return to the **I** position.

Note: *Make sure that all the warning lights (apart from the park brake light) are off when the engine is running. If a warning light stays on, stop the engine immediately and find the cause of the problem.*

Note: *The **II** position is not used.*

⚠ WARNING

Starting the engine by shorting across the starter motor terminals will bypass any safety features and will allow the vehicle to start in gear. Use only the starter key to start the vehicle.

13-1-1-20

PREVIEW - YOUFIXTHIS.COM

Download full manual at youfixthis.com

Page left intentionally blank

PREVIEW - YOUFIXTHIS.COM

Download full manual at youfixthis.com

Brakes

Park Brake

Introduction

T3-071

WARNING

Do not use a machine with a faulty park brake.

3-2-3-10_2

WARNING

Non approved modifications to drive ratios, machine weight or wheel and tyre sizes may adversely affect the performance of the park brake.

3-2-3-11

Make sure that you obey all health and safety precautions before you test or adjust the park brake.

If you have any queries concerning the park brake test or adjustment procedures, consult your local JCB distributor.

Testing the Park Brake

P13-3003

WARNING

Before testing the park brake make sure the area around the machine is clear of people.

2-2-4-5

Test the park brake on a hard, dry surface on a slope of about 15 degrees. Make sure that your seat belt is securely fastened.

1 Push down hard on the foot brake pedal.

2 Fully engage the park brake.

3 Select forward gear.

The park brake warning light must come on when the park brake is engaged and a forward or reverse gear is selected. (The starter key is in the ON position).

4 Select neutral.

WARNING

If the machine starts to move during the following test, immediately apply the foot brake and reduce the engine speed.

2-2-5-1

5 Slowly release the foot brake pedal.

6 The machine should not move, if the machine starts to move push the foot brake pedal.

7 If the machine moved during the test, consult your local JCB Dealer.

PREVIEW - YOUFIXTHIS.COM

Download full manual at youfixthis.com

PREVIEW ONLY

You're viewing 11 of 152 pages

The full manual includes:

- All 152 pages, complete
- Searchable PDF (find any keyword)
- No watermarks
- Instant download
- Print-ready quality

GET FULL MANUAL NOW

JCB WORKMAX 1000D Operator Manual

Scan or click anywhere
youfixthis.com

Click anywhere on this page to get the full manual