SECTION 1 FRAME

FIGURE 1-1. DRIVE AND STEERING INSTALLATION

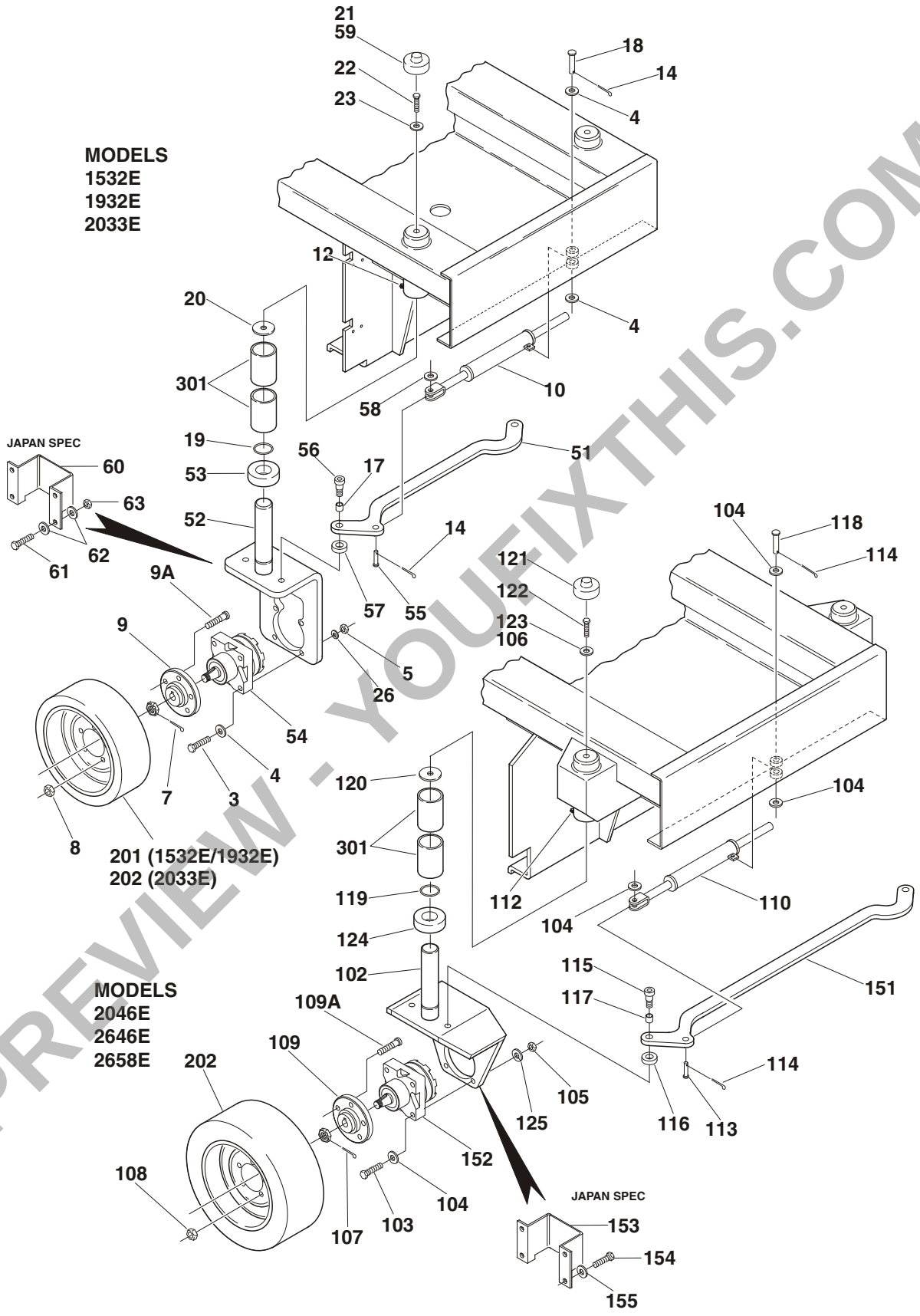

PREVIEW - YOUFIXTHIS.COM

Download full manual at youfixthis.com

FIGURE 2-1. HYDRAULIC COMPONENTS AND COVER INSTALLATION - 1532E/1932E (POWER DOWN MACHINES)

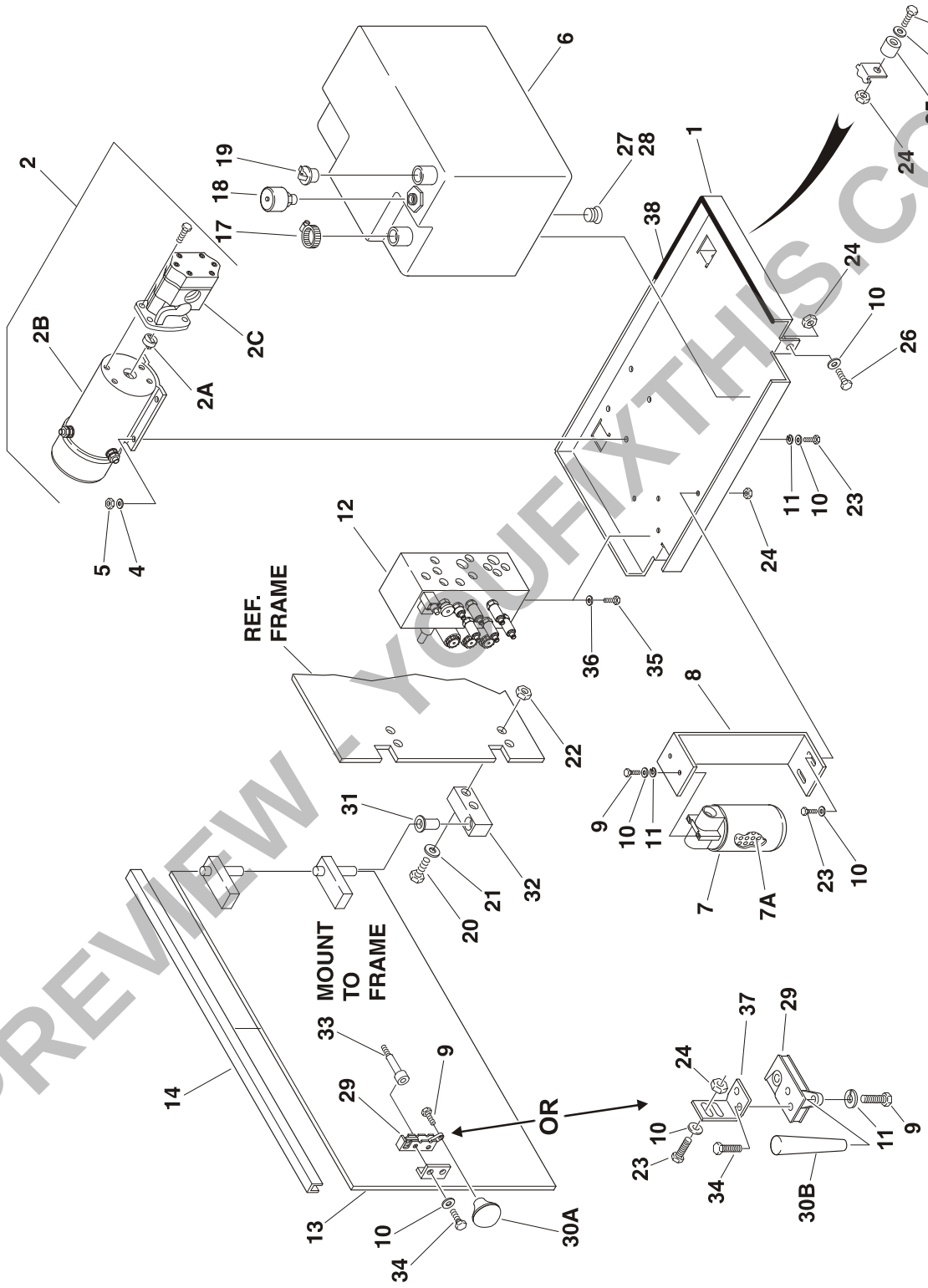

PREVIEW - YOUFIXTHIS.COM

Download full manual at youfixthis.com

FIGURE 1-1. DRIVE AND STEERING INSTALLATION

FIG & ITEM #	PART NUMBER	DESCRIPTION	QTY.	REV.
		DRIVE AND STEERING INSTALLATION - 1532E/ 1932E/2033E	Ref.	
1 to 2	Not Used			
3	0641826	Bolt 1/2"-13NC x 3 1/4"	8	
4	4740453	Flatwasher 1/2" Special	A/R	
5	3311801	Nut 1/2"-13NC	8	
6	0100011	Loctite #242 (Not Shown)	A/R	
7	3450406	Pin, Cotter 1/8" x 1 1/2"	2	
8	3300255	Nut, Wheel	10	
9	2780216	Hub	2	
9A	7012613	Bolt, Wheel (5 Per Hub)	10	
10		Steer Cylinder Assembly Options (See Section 5 for Breakdown):	1	
	1683351	Prior to S/N 24267		
	1683428	S/N 24267 to Present		
11	Not Used			
12	2160002	Fitting, Grease (Prior to S/N 30800)	2	
	2160006	Fitting, Grease (S/N 30800 to S/N 42315)	2	
	2160008	Fitting, Grease (S/N 42315 to Present)	2	
	1120064	Cap, Grease Fitting	A/R	
13	Not Used			
14	3450403	Pin, Cotter 1/8" x 3/4"	2	
15 to 16	Not Used			
17	0962013	Bushing, Fiberglide	2	
18	3430824	Pin, Clevis	1	
19	3780166	O-Ring	2	
20	4740419	Washer, Thrust	2	
21	1120417	Cap	2	
22	0641611	Bolt 3/8"-16NC x 1 3/8"	2	
23	4711600	Flatwasher 3/8" Narrow	2	
24 to 25	Not Used			
26	4761800	Lockwasher 1/2" (S/N 28527 to Present)	8	
		DRIVE AND STEERING INSTALLATIONS - 1532E/ 1932E/2033E (VARIABLE PARTS)	Ref.	
	0255933	**1532E/1932E (Prior To S/N 24267)**	Ref.	B
	0256636	**1532E/1932E (S/N 24267 to S/N 36748)**	Ref.	10
	0257567	**1532E/1932E (S/N 36748 to Present)**	Ref.	7
	0255597	**2033E With Manually Operated Extension (Standard Machines) (Prior to S/N 24267 Except S/N 23603, 23604 & 23605)**	Ref.	B
	0256635	**2033E With Manually Operated Extension (Standard Machines) (S/N 23603, 23604, 23605 & 24267 to S/N 36748)**	Ref.	9
	0257568	**2033E With Manually Operated Extension (Standard Machines) (S/N 36748 to Present)**	Ref.	6
	0258882	**2033E With Power Operated Extension (Standard Machines)**	Ref.	1

PREVIEW - YOUFIXTHIS.COM

Download full manual at youfixthis.com

FIGURE 7-2.STANDARD ELECTRICAL DIAGRAM (POWER DOWN MACHINES)

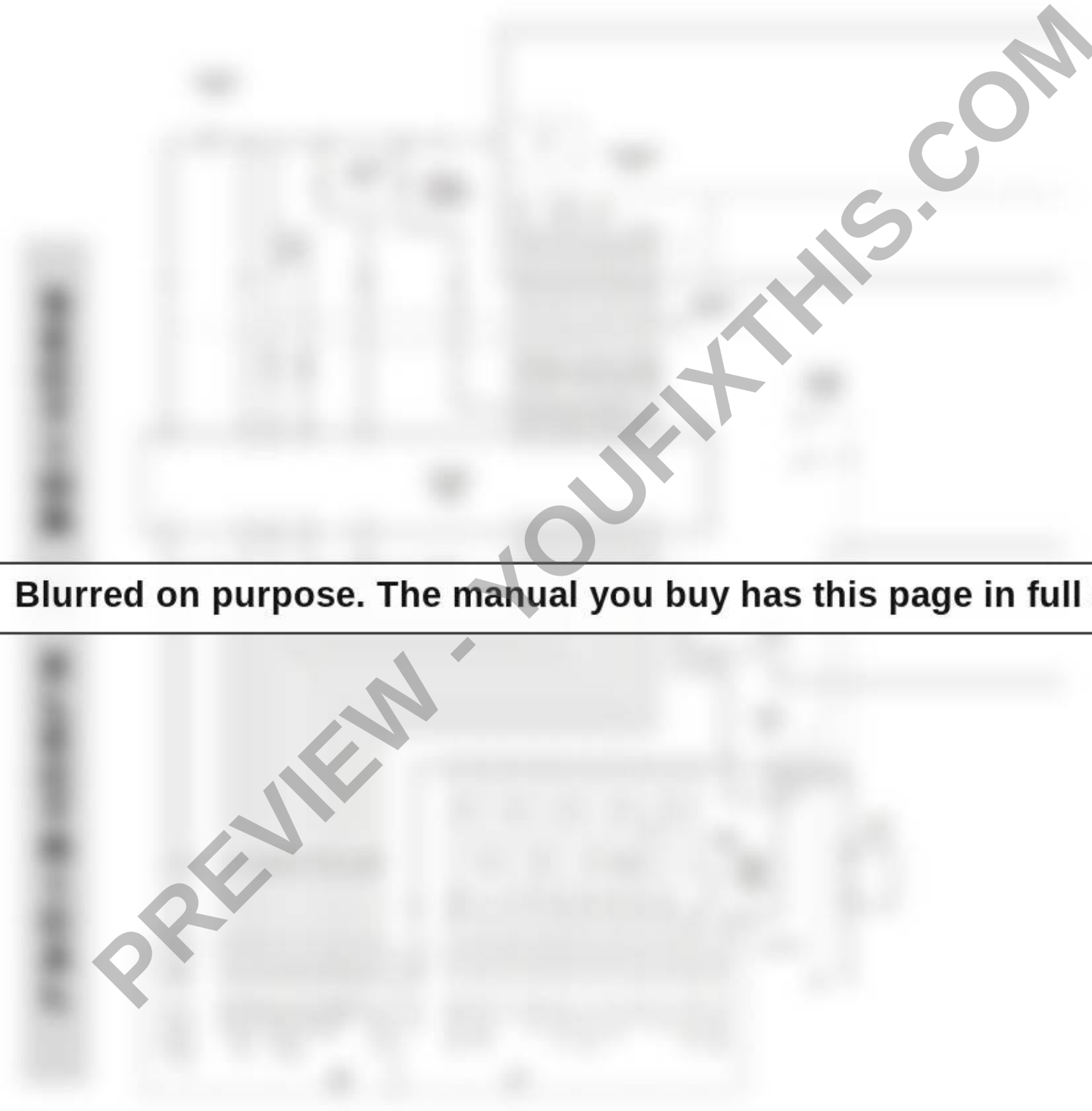

Blurred on purpose. The manual you buy has this page in full quality.

PREVIEW - YOUFIXTHIS.COM

Download full manual at youfixthis.com

SECTION 6 HYDRAULIC

FIGURE 6-1.HYDRAULIC DIAGRAM (POWER DOWN MACHINES)



Blurred on purpose. The manual you buy has this page in full quality.

PREVIEW - YOUFIXTHIS.COM

Download full manual at youfixthis.com

TABLE OF CONTENTS

FIGURE NO.	TITLE	PAGE NO.
SECTION 1 - FRAME		**1-1**
1-1	DRIVE AND STEERING INSTALLATION	1-2
1-2	DRIVE MOTOR ASSEMBLIES - WHITE	1-8
1-3	DRIVE MOTOR ASSEMBLIES - EATON	1-12
1-4	AXLE/BRAKE INSTALLATIONS (POWER DOWN MACHINES)	1-14
1-5	AXLE/BRAKE INSTALLATIONS (GRAVITY DOWN MACHINES)	1-18
1-6	JLG POTHOLE PROTECTION SYSTEM INSTALLATION (POWER DOWN MACHINES)	1-20
1-7	JLG POTHOLE PROTECTION SYSTEM INSTALLATION (GRAVITY DOWN MACHINES)	1-24
1-8	FRAME MOUNTED COMPONENTS INSTALLATION (POWER DOWN MACHINES)	1-28
1-9	FRAME MOUNTED COMPONENTS INSTALLATION (GRAVITY DOWN MACHINES)	1-34
1-10	BATTERY CHARGER ASSEMBLIES - STANDARD	1-40
1-11	BATTERY CHARGER ASSEMBLIES - REPLACEMENT KIT	1-44
SECTION 2 - GROUND COMPONENTS		**2-1**
2-1	HYDRAULIC COMPONENTS AND COVER INSTALLATION - 1532E/1932E (POWER DOWN MACHINES)	2-2
2-2	HYDRAULIC COMPONENTS AND COVERS INSTALLATION - 1532E/1932E (GRAVITY DOWN MACHINES)	2-4
2-3	HYDRAULIC COMPONENTS AND COVERS INSTALLATION - 2033E/2046E/2646E/2658E (POWER DOWN MACHINES)	2-6
2-4	HYDRAULIC COMPONENTS AND COVERS INSTALLATION - 2033E/2046E/2646E/2658E (GRAVITY DOWN MACHINES)	2-10
2-5	VALVE ASSEMBLY	2-14
2-6	ELECTRICAL COMPONENTS INSTALLATIONS (AT GROUND CONTROLS)	2-18
2-7	BATTERY INSTALLATIONS	2-22
SECTION 3 - SCISSOR ARMS		**3-1**
3-1	SCISSOR ARMS INSTALLATION - 1532E (POWER DOWN MACHINES)	3-2
3-2	SCISSOR ARMS INSTALLATION - 1532E (GRAVITY DOWN MACHINES)	3-6
3-3	SCISSOR ARMS INSTALLATION - 1932E (POWER DOWN MACHINES)	3-10
3-4	SCISSOR ARMS INSTALLATION - 1932E (GRAVITY DOWN MACHINES)	3-14
3-5	SCISSOR ARMS INSTALLATION - 2033E/2046E (POWER DOWN MACHINES)	3-18
3-6	SCISSOR ARMS INSTALLATION - 2033E/2046E (GRAVITY DOWN MACHINES)	3-22
3-7	SCISSOR ARMS INSTALLATION - 2646E/2658E (POWER DOWN MACHINES)	3-26
3-8	SCISSOR ARMS INSTALLATION - 2646E/2658E (GRAVITY DOWN MACHINES)	3-30
SECTION 4 - PLATFORM		**4-1**
4-1	PLATFORM INSTALLATION - MANUALLY OPERATED EXTENSION	4-2
4-2	HANDRAILS AND EXTENSION INSTALLATION - STANDARD RAILS (MANUALLY OPERATED) (1532E/1932E)	4-8
4-3	HANDRAILS AND EXTENSION INSTALLATION -STANDARD RAILS (MANUALLY OPERATED) (2033E/2046E/2646E/2658E)	4-12
4-4	HANDRAILS AND EXTENSION INSTALLATION - FOLDDOWN RAILS (MANUALLY OPERATED) (1532E/1932E)	4-18
4-5	HANDRAILS AND EXTENSION INSTALLATION - FOLDDOWN RAILS (MANUALLY OPERATED) (2033E/2046E/2646E/2658E)	4-22
4-6	PLATFORM ASSEMBLY - POWER OPERATED (2033E/2046E/2646E/ 2658E)	4-28
4-7	EXTENSION INSTALLATION - POWER OPERATED (2033E/2046E/ 2646E/2658E)	4-32
4-8	HANDRAILS INSTALLATION - POWER OPERATED PLATFORMS (2033E/2046E/2646E/2658E)	4-36

PREVIEW IS YOUFIXTHIS.COM

Download full manual at youfixthis.com

TABLE OF CONTENTS

FIGURE NO.	TITLE	PAGE NO.
4-9	HANDRAILS INSTALLATION - OPTIONAL FOLDDOWN RAILS POWER OPERATED PLATFORM (2046E/2646E)	4-40
4-10	PLATFORM CONSOLE BOX ASSEMBLY	4-44
4-11	CONTROLLER ASSEMBLY - OEM	4-48
4-12	CONTROLLER ASSEMBLY - PQ	4-50
SECTION 5 - CYLINDERS		**5-1**
5-1	BRAKE CYLINDER ASSEMBLY	5-2
5-2	LIFT CYLINDER COMPONENTS ASSEMBLY(1532/1932 POWER DOWN MACHINES BUILT PRIOR TO S/N 27181)	5-4
5-3	LIFT CYLINDER COMPONENTS ASSEMBLY (1532/1932 POWERDOWN MACHINES BUILT S/N 27181 TO PRESENT)	5-8
5-4	LIFT CYLINDER COMPONENTS ASSEMBLY (1532E/1932E GRAVITY DOWN MACHINES)	5-10
5-5	LIFT CYLINDER COMPONENTS ASSEMBLY (2033E/2046E POWER DOWN MACHINES BUILT PRIOR TO S/N 27085 & 2646E/2658E POWER DOWN MACHINES BUILT PRIOR TO S/N 26916)	5-14
5-6	LIFT CYLINDER COMPONENTS ASSEMBLY (2033E/2046E POWER DOWN MACHINES BUILT S/N 27085 TO PRESENT & 2646E/2658E POWER DOWN MACHINES BUILT S/N 26916 TO PRESENT)	5-18
5-7	LIFT CYLINDER COMPONENTS ASSEMBLY (2033E/2046E/2646E/2658E GRAVITY DOWN MACHINES)	5-22
5-8	PLATFORM EXTENSION CYLINDER ASSEMBLIES	5-26
5-9	STEER CYLINDER ASSEMBLY	5-28
SECTION 6 - HYDRAULIC		**6-1**
6-1	HYDRAULIC DIAGRAM (POWER DOWN MACHINES)	6-2
6-2	HYDRAULIC DIAGRAM (GRAVITY DOWN MACHINES)	6-6
6-3	HYDRAULIC DIAGRAM LIST	6-10
SECTION 7 - ELECTRICAL		**7-1**
7-1	ELECTRICAL DIAGRAM LIST	7-2
7-2	STANDARD ELECTRICAL DIAGRAM (POWER DOWN MACHINES)	7-4
7-3	STANDARD ELECTRICAL DIAGRAM (GRAVITY DOWN MACHINES)	7-6
7-4	HARNESS AND CABLE ASSEMBLIES	7-8
SECTION 8 - DECALS		**8-1**
8-1	DECALS INSTALLATION - 1532E/1932E POWER DOWN MACHINES (STANDARD)	8-2
8-2	DECALS INSTALLATION - 1532E/1932E POWER DOWN MACHINES (COUNTRY SPEC)	8-6
8-3	DECALS INSTALLATION - 2033E/2046E/2646E/2658E POWER DOWN MACHINES (STANDARD)	8-10
8-4	DECALS INSTALLATION - 2033E/2046E/2646E/2658E POWER DOWN MACHINES (COUNTRY SPEC)	8-14
8-5	DECAL INSTALLATION - GRAVITY DOWN MACHINES	8-18
SECTION 9 - RECOMMENDED SERVICE PARTS STOCK		**9-1**
SECTION 10 - SPECIAL OPTIONS		**10-1**

PREVIEW - YOUFIXTHIS.COM

Download full manual at youfixthis.com

FIGURE 1-9. FRAME MOUNTED COMPONENTS INSTALLATION (GRAVITY DOWN MACHINES)

FIG & ITEM #	PART NUMBER	DESCRIPTION	QTY.	REV.
602		Mounting Bracket Options:	1	
	0902344	1532E/1932E (Prior to S/N 51987 Only)		
	0902340	2033E/2046E/2646E/2658E (Prior to S/N 43889)		
		Note: For 2033/2046E/2646E/2658E S/N 43889 to present moved to frame - bracket not required.		
603	4751500	Flatwasher 5/16"	A/R	
604	4751700	Flatwasher 7/16"	A/R	
605	3311505	Locknut 5/16"-18NC	A/R	
	2080048	Rivnut	A/R	
606	1060627	Cable	2	
607 to 608	Not Used			
609	0840027	Boot, Cable	2	
610	0641510	Bolt 5/16"-18NC x 1 1/4"	A/R	
611	3311505	Locknut 5/16"-18NC	A/R	
612	3820023	Rivet (Not Shown)	A/R	
613	4740455	Washer, Nylon	8	
614	0840025	Boot, Cable	2	
615	1320095	Clamp	1	
	0256374	**LIFTING LUGS INSTALLATION - MODELS 1532E/1932E/ 2046E/2646E/2658E**	Ref.	–
	0256373	**LIFTING LUGS INSTALLATION - MODEL 2033E ONLY**	Ref.	2
701		Lug, Lift (Right Rear/Left Front)	2	
	3539735	Models 1532E/1932E/2046E/2646E/2658E		
	4845314	Model 2033E Only		
702		Lug, Lift (Left Rear/Right Front)	2	
	3539736	Models 1532E/1932E/2046E/2646E/2658E		
	4845315	Model 2033E Only		
703	0641610	Bolt 3/8"-16NC x 1 1/4"	8	
704	3311605	Locknut 3/8"-16NC	8	
705	4751600	Flatwasher 3/8"	8	
	0257372	**STATIC STRAP INSTALLATION**	Ref.	3/D
801	4240084	Strap, Static	1	
802	0641408	Bolt 1/4"-20NC x 1" (Prior to S/N 33411)	1	
	3941406	Self Tapping 1/4"-UNC-2A x 3/4" (S/N 33411 to Present)	1	
803	3311405	Locknut 1/4"-20NC (Prior to S/N 33411)	1	
804	4751400	Flatwasher 1/4"	2	
		DRIVE CUT-OUT SWITCH INSTALLATION (OPTIONAL)	Ref.	
	0256844	**1000Lbs Drive Cut-out Switch I**	Ref.	3/C
	0259108	**Elevated Drive Cut-out Switch**	Ref.	1/A
901	1440325	Collar	1	
902	3951603	Setscrew 3/8"-16NC x 3/8"	2	
903	3570030	Bracket	1	
904	3570029	Plate	1	
905	4360321	Switch, Limit	1	
906	3911020	Screw, Machine #10-24NC x 1 1/4"	2	
907	4751000	Flatwasher #10	2	
908	3311005	Locknut #10-24NC	2	
909	0641405	Bolt 1/4"-20NC x 5/8"	2	
910	4751400	Flatwasher 1/4"	4	
911	3311405	Locknut 1/4"-20NC	2	
912	4460428	Connector, Strain Relief	1	
913	1060341	Cable, Electrical - 16/2	9ft/2.74m	

PREVIEW - YOUFIXTHIS.COM

Download full manual at youfixthis.com

FIGURE 3-3. SCISSOR ARMS INSTALLATION - 1932E (POWER DOWN MACHINES)

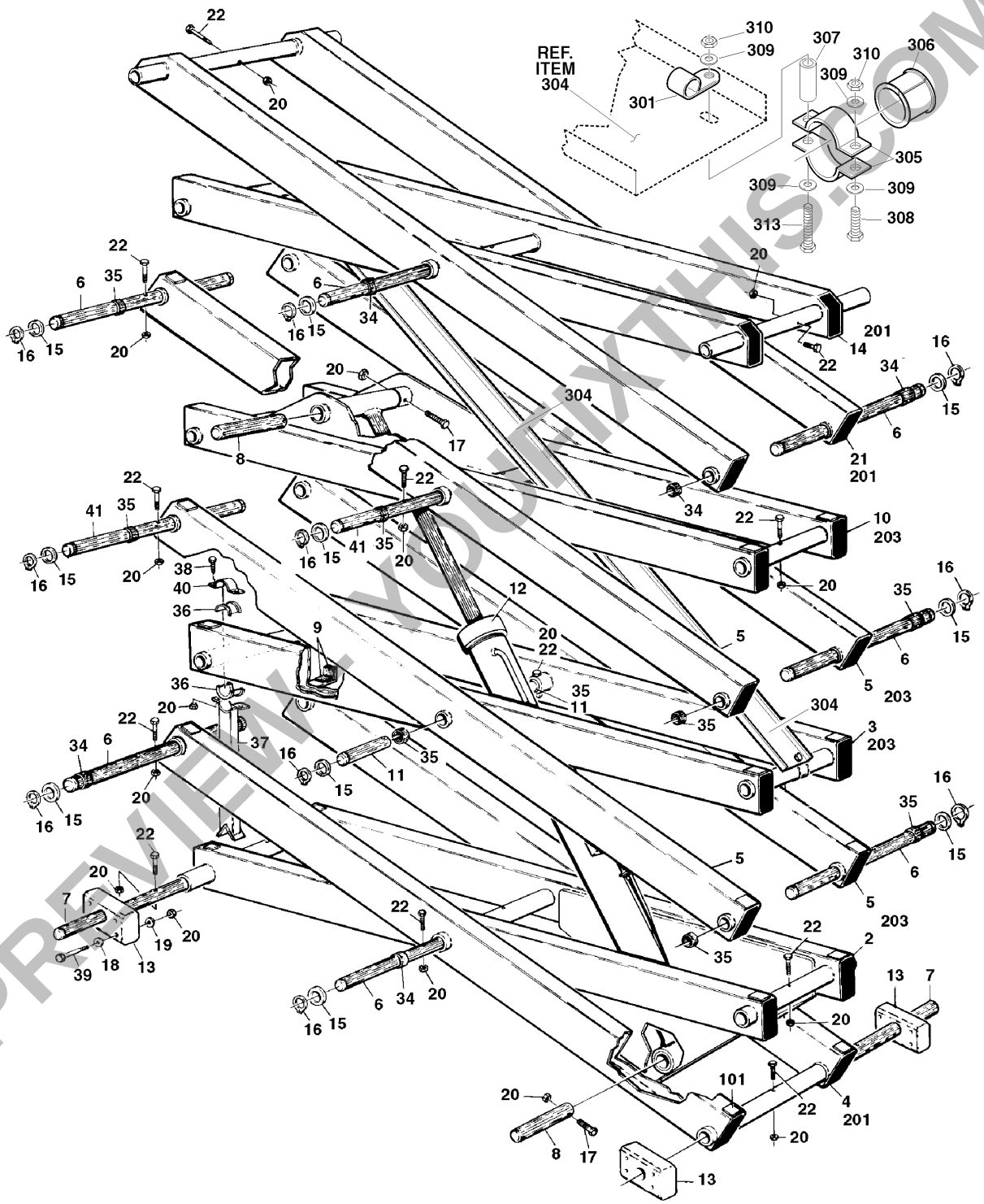

PREVIEW. YOUFIXTHIS.COM

Download full manual at youfixthis.com

FIGURE 4-4. HANDRAILS AND EXTENSION INSTALLATION - FOLDDOWN RAILS (MANUALLY OPERATED) (1532E/1932E)

FIG & ITEM #	PART NUMBER	DESCRIPTION	QTY.	REV.
	0254236	**FOLDDOWN HANDRAILS INSTALLATION**	Ref.	5
	0257460	**FOLDDOWN HANDRAILS INSTALLATION**	Ref.	4
1	3640886	Rail Weldment - Lower Side	2	
2	3640742	Rail Weldment - Upper Front Right Side	1	
3	3640753	Rail Weldment - Upper Front Left Side	1	
4	3640885	Rail Weldment - Upper Side	2	
5	4565191	Tube, Rail - Upper Rear Side (Prior to S/N 38589)	2	
	3641235	Tube, Rail - Upper Rear Side (S/N 38589 to Present)	2	
6	4565285	Tube, Rail - Upper Rear Top	1	
7	0641424	Bolt 1/4"-20NC x 3" (Prior to S/N 38589)	4	
	0641420	Bolt 1/4"-20NC x 2 1/2" (S/N 38589 to Present)	4	
8	4751400	Flatwasher 1/4"	8	
9	4761400	Lockwasher 1/4" (Prior to S/N 38589)	4	
10	3311401	Nut 1/4"-20NC	4	
11	Not Used			
12	3520072	Plug, Cap	10	
13 to 14	Not Used			
15	3430416	Pin, Clevis	8	
16	4711400	Flatwasher 1/4" Narrow	16	
17	3450203	Pin, Cotter	8	
18 to 20	Not Used			
21	3421913	Pin, Quick Release	4	
22	1260017	Chain	28in/71cm	
23	1260136	Chain	18in/46cm	
24	3010088	Link	2	
25	2940056	Latch, Snap (Prior to S/N 38589)	1	
	Use 1001101076	Snap Latch Repair Kit (Includes Item 24) (was p/n 2940064) (S/N 38589 to Present)		
26 to 32	Not Used			
33	3900184	Screw, Button Head	4	
34	3300374	Nut, Connector (CSA Machines)	4	
35	3300375	Nut, Connector	4	
36	Not Used			
37	2820097	Tubing, Mesh	2 ft./.6m	
38	3340612	Pad	1.5ft/.5m	

PREVIEW - YOUFIXTHIS.COM

Download full manual at youfixthis.com

(Continued)
FIGURE 5-3. LIFT CYLINDER COMPONENTS ASSEMBLY (1532/1932 POWER DOWN MACHINES BUILT S/N 27181 TO PRESENT)

FIG & ITEM #	PART NUMBER	DESCRIPTION	QTY.	REV.
		Note: To determine Power or Gravity Down refer to page A.		
		LIFT CYLINDER SUB-ASSEMBLY	Ref.	
1 to 22	Not Used			
23	0641506	Bolt 5/16"-18NC x 3/4"	4	
24	0100011	Loctite #242	A/R	
25	4640717	Cartridge, Valve (Manual Descent)	1	
26	3311402	Nut, Jam 1/4"-20NC	1	
27	0080190	Adapter	1	
28	4220044	Stop, Throttle (Prior to S/N 28355 Only)	1	
29	0902151	Bracket	1	
30		Cable Assembly Options:	1	
	Use 1060644	Prior to S/N 28175 (was p/n 1060597)		
	1060644	S/N 28175 to Present		
30A	7019602	Bellows Kit (Use with 1060644 Cable Only)	1	
30B	7019600	T-Handle (Use with 1060644 Cable Only)	1	
31	3450405	Pin, Cotter	1	
32	3321402	Nut, Jam 1/4"-28NF	4	
33	4711400	Flatwasher 1/4"	4	
	1683475	**LIFT CYLINDER ASSEMBLY - 1532E/1932E**	Ref.	–
101	Kit	O-Ring	1	
102	Kit	Ring, Back-up	1	
103	Kit	O-Ring	1	
104	Kit	Wiper	1	
105	Kit	O-Ring	1	
106	Kit	Seal	1	
107	Kit	Seal	1	
108	Kit	Ring, Wear	2	
109	Kit	Ring, Wear	1	
110	Not Used			
111	7017367	Locknut	1	
112	7005312	Plug (Not Shown)	1	
113	7005315	Plug (Not Shown)	2	
114	7005365	Plug	3	
115	7017372	Cartridge, Valve	1	
	Not Available	Seal Kit - 7017372 Valve	1	
116	Not Serviced	Plug	1	
117	7017378	Bushing, Garmax	4	
118	Not Serviced	Barrel Weldment	1	
119	7017383	Rod Weldment	1	
120	7017382	Head	1	
121	7017381	Piston	1	
122	7017380	Spacer	1	
		– – – – – – – – – –		
	7017379	Seal Kit - 1683475 Cylinder (Includes Items 101-109)	1	

PREVIEW - YOUFIXTHIS.COM

Download full manual at youfixthis.com

FIGURE 7-4. HARNESS AND CABLE ASSEMBLIES (CONTINUED)

FIG & ITEM #	PART NUMBER	DESCRIPTION	QTY.	REV.
		WIRING DIAGRAMS	Ref.	
	4932832	**1532E/1932E Power Down Units**	Ref.	6
	4932973	**1532E/1932E Gravity Down Units**	Ref.	4
	4932831	**2033E/2046E/2646E/2658E Power Down Units**	Ref.	7
	4932972	**2033E/2046E/2646E/2658E Gravity Down Units**	Ref.	3
		Note: To determine Power or Gravity Down refer to Page A.		
201	4460434	Connector - 15 Pin	1	
202	4460268	Socket, Female	18	
203		Harness, Valve	1	
	4921784	Power Down Machines except S/N 31325-31329		E
	4921889	Power Down Machines S/N 31325-31329 Only		1/A
	4921958	Gravity Down Machines (Prior to S/N 36817)		1/A
	4922013	Gravity Down Machines (S/N 36817 to S/N 37824)		2
	4922025	Gravity Down Machines (S/N 37824 to Present)		1/A
203A	4460268	Socket	12	
203B	4460449	Connector, DIN	10	
203C	4460343	Connector - 12 Pin	1	
204	1060341	Cable, Electrical - 16/2	27ft/8.23m	
205	4460320	Connector - 2 Pin	4	
206		Harness - Ground Control	1	
	4921786	1532E/1932E Power Down Machines		B
	4921894	1532E/1932E Gravity Down Machines		B
	4921785	2033E/2046E/2646E/2658E Power Down Machines		B
	4921890	2033E/2046E/2646E/2658E Gravity Down Machines		B
206A	4460268	Socket	A/R	
	4460225	Connector - 6 Pin	1	
207		Harness - Ground Power	1	
	4921831	Power Down Machines		
	4922014	1532E/1932E Gravity Down Machines		
	4921891	2033E/2046E/2646E/2658E Gravity Down Machines		
208	Not Used			
209	4460267	Pin	2	
210		Cable, Battery	1	
	1060636	1532E/1932E		
	1060561	2033E/2046E/2646E/2658E		
211	1060622	Cable, Battery	2	
212		Harness - Keyswitch	1	
	4921832	Power Down Machines		B
	4921892	Gravity Down Machines		2/B
213		Harness - Emergency Stop	1	
	4921833	Power Down Machines		B
	4921893	Gravity Down Machines		2/B
214	0840025	Boot, Terminal	6	
215	4922011	Harness - Lift Down (S/N 36817 to Present)	1	

PREVIEW - YOUFIXTHIS.COM

Download full manual at youfixthis.com

PREVIEW ONLY

You're viewing 12 of 258 pages

The full manual includes:

- All 258 pages, complete
- Searchable PDF (find any keyword)
- No watermarks
- Instant download
- Print-ready quality

GET FULL MANUAL NOW

JLG 1532E, 1932E, 2033E, 2046E, 2646E, 2658E Parts Catalog

Scan or click anywhere
youfixthis.com

Click anywhere on this page to get the full manual