SECTION 1. SPECIFICATIONS

Horsepower - 54 @ 2400 RPM, full load

Blurred on purpose. The manual you buy has this page in full quality.

PREVIEW - YOUFIXTHIS.COM

Download full manual at youfixthis.com

Table 1-9. Lubrication Chart

Blurred on purpose. The manual you buy has this page in full quality.

PREVIEW - YOUFIXTHIS.COM

Download full manual at youfixthis.com

SECTION 3. CHASSIS & TURNTABLE

PREVIEW - YOUFIXTHIS.COM

Blurred on purpose. The manual you buy has this page in full quality.

Download full manual at youfixthis.com

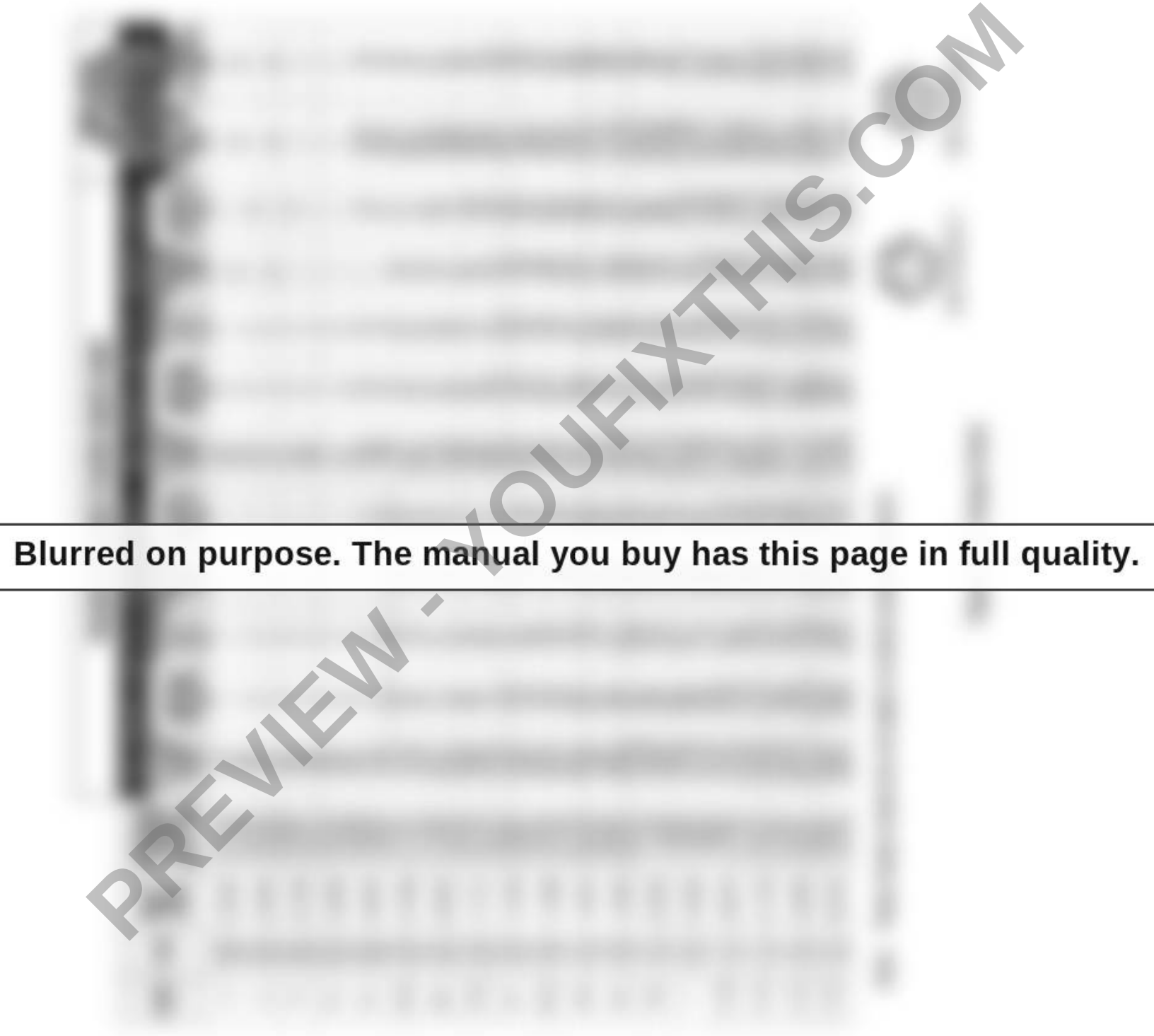

Blurred on purpose. The manual you buy has this page in full quality.

PREVIEW - YOUFIXTHIS.COM

Download full manual at youfixthis.com

Table 3-2. ECM Diagnostic Trouble Codes

Diagnostic Trouble Code	Description
11	All Systems OK
12	Throttle Position (TP) Sensor Low Voltage
14	Manifold Absolute Pressure (MAP) Low Voltage
21	Overspeed
22	Throttle Position (TP) Sensor High Voltage
24	Manifold Absolute Pressure (MAP) High Voltage
31	Fuel Pump Low Voltage
32	Heated Oxygen Sensor (HO2S) Low Voltage
33	Engine Coolant Temperature (ECT) Sensor High Voltage
35	Intake Air Temperature (IAT) Sensor High Voltage
41	Fuel Pump High Voltage
42	Heated Oxygen Sensor (HO2S) High Voltage
43	Engine Coolant Temperature (ECT) Sensor Low Voltage
45	Intake Air Temperature (IAT) Sensor Low Voltage
51	Low Oil Pressure
52	Crankshaft Position (CKP) Sensor Extra/Missing Pulses
53	Camshaft Position Sensor (CMP) Sensor Illegal Pattern
54	Engine Control Module (ECM) Fault Illegal Operation
55	Engine Control Module (ECM) Fault Illegal Interruption
56	Engine Control Module (ECM) Fault COP (Computer Operating Properly) Failure
61	System Voltage Low
62	System Voltage High

PREVIEW - YOUFIXTHIS.COM

Download full manual at youfixthis.com



PREVIEW - YOUFIXTHIS.COM

Blurred on purpose. The manual you buy has this page in full quality.

Download full manual at youfixthis.com

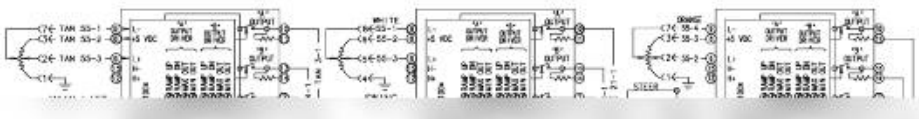

Blurred on purpose. The manual you buy has this page in full quality.

PREVIEW - YOUFIXTHIS.COM

Download full manual at youfixthis.com

TABLE OF CONTENTS

SUBJECT - SECTION, PARAGRAPH **PAGE NO.**

SECTION A - INTRODUCTION - MAINTENANCE SAFETY PRECAUTIONS

A General A-1
B Hydraulic System Safety A-1
C Maintenance A-1

SECTION 1 - SPECIFICATIONS

1.1 Capacities 1-1
Fuel Tank 1-1
Hydraulic Oil Tank 1-1
Hydraulic System (Including Tank) 1-1
Torque Hub, Drive 1-1
Engine Crankcase 1-1
1.2 Component Data 1-1
Engine - Diesel (Liquid-Cooled) 1-1
Drive System 1-1
Steer System 1-1
Swing System 1-2
Hydraulic Gear Pump (at 1800 RPM) 1-2
Auxiliary Power Pump 1-2
Hydraulic Filter - In-line 1-2
1.3 Performance Data 1-2
Turning Radius (Outside) 1-2
Turning Radius (Inside) 1-2
Boom Elevation 1-2
Machine Weight approximately 1-2
Machine Height (Stowed) 1-2
Machine Length (Stowed) 1-2
Machine Width 1-2
Wheel base 1-2
1.4 Function Speeds 1-2
Machine Orientation When Doing Speed Tests 1-2
Test Notes 1-3
1.5 Torque Requirements 1-3
1.6 Lubrication 1-4
Ford LRG425 Engine 1-4
Deutz F3M1011F Engine 1-4
Hydraulic Oil 1-5
Lubrication Specifications 1-5
1.7 Pressure Settings 1-5
1.8 Cylinder Specifications 1-6
1.9 Major Component Weights 1-6
1.10 Critical Stability Weights 1-6
1.11 Serial Number Locations 1-7

SECTION 2 - GENERAL

2.1 Machine Preparation, Inspection, and Maintenance 2-1
General 2-1
Preparation, Inspection, and Maintenance 2-1
Pre-Start Inspection 2-1
Pre-Delivery Inspection and Frequent Inspection 2-1
Annual Machine Inspection 2-1
Preventative Maintenance 2-1

PREVIEW - YOUFIXTHIS.COM

Download full manual at youfixthis.com

SECTION A. INTRODUCTION - MAINTENANCE SAFETY PRECAUTIONS

A GENERAL

This section contains the general safety precautions which must be observed during maintenance of the aerial platform. It is of utmost importance that maintenance personnel pay strict attention to these warnings and precautions to avoid possible injury to themselves or others, or damage to the equipment. A maintenance program must be followed to ensure that the machine is safe to operate.

⚠ WARNING

MODIFICATION OF THE MACHINE WITHOUT CERTIFICATION BY A RESPONSIBLE AUTHORITY THAT THE MACHINE IS AT LEAST AS SAFE AS ORIGINALLY MANUFACTURED, IS A SAFETY VIOLATION.

The specific precautions to be observed during maintenance are inserted at the appropriate point in the manual. These precautions are, for the most part, those that apply when servicing hydraulic and larger machine component parts.

Your safety, and that of others, is the first consideration when engaging in the maintenance of equipment. Always be conscious of weight. Never attempt to move heavy parts without the aid of a mechanical device. Do not allow heavy objects to rest in an unstable position. When raising a portion of the equipment, ensure that adequate support is provided.

⚠ WARNING

SINCE THE MACHINE MANUFACTURER HAS NO DIRECT CONTROL OVER THE FIELD INSPECTION AND MAINTENANCE, SAFETY IN THIS AREA RESPONSIBILITY OF THE OWNER/OPERATOR.

B HYDRAULIC SYSTEM SAFETY

It should be noted that the machines hydraulic systems operate at extremely high potentially dangerous pressures. Every effort should be made to relieve any system pressure prior to disconnecting or removing any portion of the system.

Relieve system pressure by cycling the applicable control several times with the engine stopped and ignition on, to direct any line pressure back into the reservoir. Pressure feed lines to system components can then be disconnected with minimal fluid loss.

C MAINTENANCE

⚠ WARNING

FAILURE TO COMPLY WITH SAFETY PRECAUTIONS LISTED IN THIS SECTION MAY RESULT IN MACHINE DAMAGE, PERSONNEL INJURY OR DEATH AND IS A SAFETY VIOLATION.

- NO SMOKING IS MANDATORY. NEVER REFUEL DURING ELECTRICAL STORMS. ENSURE THAT FUEL CAP IS CLOSED AND SECURE AT ALL OTHER TIMES.
- REMOVE ALL RINGS, WATCHES AND JEWELRY WHEN PERFORMING ANY MAINTENANCE.
- DO NOT WEAR LONG HAIR UNRESTRAINED, OR LOOSE-FITTING CLOTHING AND NECKTIES WHICH ARE APT TO BECOME CAUGHT ON OR ENTANGLED IN EQUIPMENT.
- OBSERVE AND OBEY ALL WARNINGS AND CAUTIONS ON MACHINE AND IN SERVICEMANUAL.
- KEEP OIL, GREASE, WATER, ETC. WIPED FROM STANDING SURFACES AND HAND HOLDS.
- USE CAUTION WHEN CHECKING A HOT, PRESSURIZED COOLANT SYSTEM.
- NEVER WORK UNDER AN ELEVATED BOOM UNTIL BOOM HAS BEEN SAFELY RESTRAINED FROM ANY MOVEMENT BY BLOCKING OR OVERHEAD SLING, OR BOOM SAFETY PROP HAS BEEN ENGAGED.
- BEFORE MAKING ADJUSTMENTS, LUBRICATING OR PERFORMING ANY OTHER MAINTENANCE, SHUT OFF ALL POWER CONTROLS.
- BATTERY SHOULD ALWAYS BE DISCONNECTED-DURING REPLACEMENT OF ELECTRICAL COMPONENTS.
- KEEP ALL SUPPORT EQUIPMENT AND ATTACHMENTS STOWED IN THEIR PROPER PLACE.
- USE ONLY APPROVED, NONFLAMMABLE CLEANING SOLVENTS.

PREVIEW - YOUFIXTHIS.COM

Download full manual at youfixthis.com

12. Remove the threaded pin (stopper - max.flow)

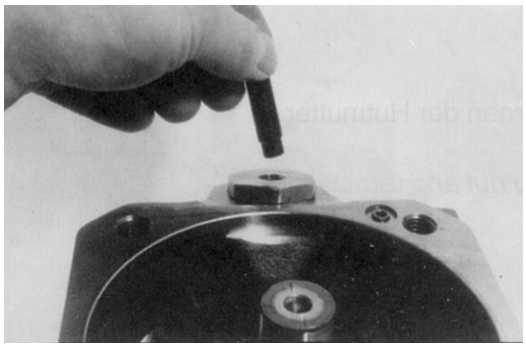

13. Disassemble the plug.



14. Disassemble the control piston while moving the swash plate.



15. The swash plate must be lifted a little bit to disassemble the piston rod.



16. Disassembly of the swash plate.

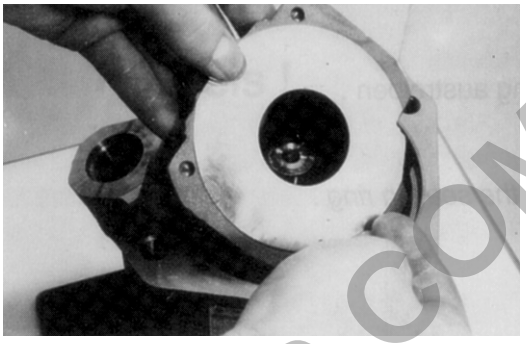

17. Remove the spring.

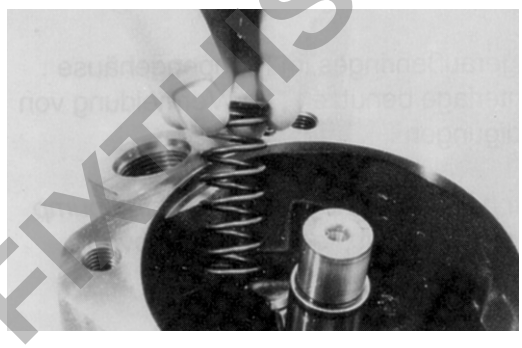

18. Remove both bearing shells.

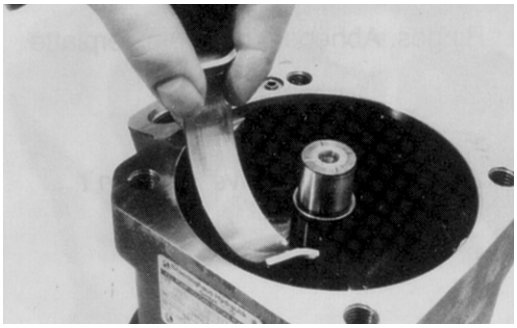

19. Remove the drive shaft.

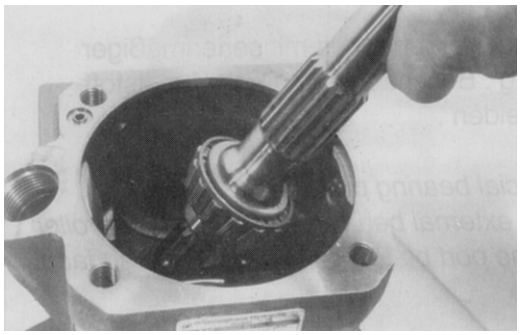

PREVIEW - YOUFIXTHIS.COM

Download full manual at youfixthis.com

SECTION 4. BOOM & PLATFORM

4.1 BOOM MAINTENANCE

Removal

1. Remove the platform/support as follows:
   a. Disconnect electrical cable from control console.
   b. Remove the eight (8) bolts securing the platform to the platform support, then remove the platform.
   c. Using an overhead crane or suitable lifting device, strap support the platform support.
   d. Remove the six (6) bolts and locknuts securing the support to the rotator.
   e. Using a suitable brass drift and hammer, remove the rotator shaft, then remove the support from the rotator.

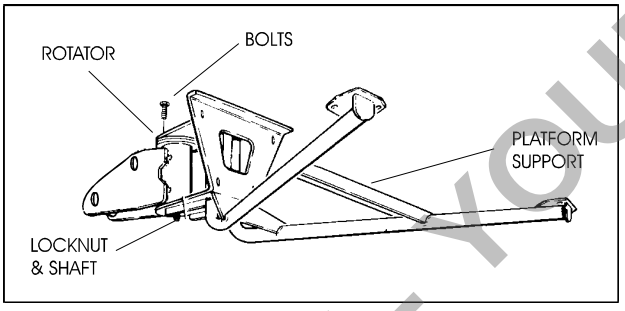

Figure 4-1. Location of Components - Platform Support

2. Remove the rotator and slave level cylinder from the fly boom as follows:
   a. Tag and disconnect hydraulic lines to rotator. Use suitable container to retain any residual hydraulic fluid. Cap hydraulic lines and ports.
   b. Remove hardware from pin #1. Using a suitable brass drift and hammer remove pin #1 from the fly boom.
   c. Supporting the rotator, remove the hardware from pin #2. Using a suitable brass drift and hammer, remove pin #2 from the fly boom and remove the rotator.
   d. Telescope the fly section out approximately 50 cm to gain access to the slave leveling cylinder.
   e. Supporting the slave, cylinder remove the hardware from pin #3. Using a suitable brass drift and hammer remove pin #3 from the fly boom.
   f. Tag and disconnect hydraulic lines to the slave leveling cylinder. Use a suitable container to retain any residual hydraulic fluid. Cap hydraulic lines and ports. Remove the slave cylinder.

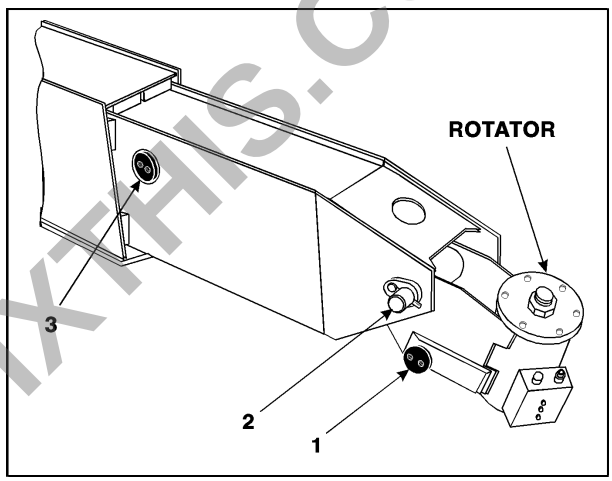

Figure 4-2. Location of Components - Rotator and Leveling Cylinder

3. Remove the powertrack from the boom as follows:
   a. Disconnect wiring harness from ground control box.

⚠ CAUTION

HYDRAULIC LINES AND PORTS SHOULD BE CAPPED IMMEDIATELY AFTER DISCONNECTING LINES TO AVOID ENTRY OF CONTAMINANTS INTO SYSTEM.

   b. Tag and disconnect hydraulic lines from boom to control valve. Use a suitable container to retain any residual hydraulic fluid. Cap hydraulic lines and ports.
   c. Disconnect the dual capacity indicator limit switch from side of boom section.
   d. Remove hydraulic lines and electrical cables from powertrack.
   e. Using a suitable lifting equipment, adequately support powertrack weight along entire length.
   f. Remove bolts #1 securing the push tube on the fly boom section.
   g. Remove bolts #2 securing the push tube on the mid boom section.

PREVIEW - YOUFIXTHIS.COM

Download full manual at youfixthis.com

6.6 MACHINE SETUP

When a machine digit item is selected, press the UP or DOWN arrow keys to adjust its value, for example:

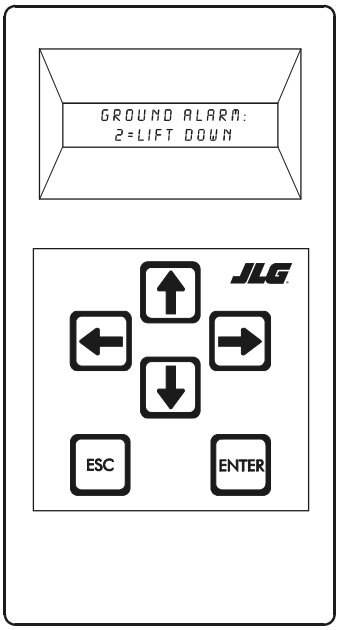

GROUND ALARM:
2 = LIFT DOWN

The effect of the machine digit value is displayed along with its value. The above display would be selected if the machine was equipped with a ground alarm and you wanted it to sound when lifting down. There are certain settings allowed to install optional features or select the machine model.

When selection the machine model to match the size of the machine, the personality settings will all default to the factory recommended setting.

NOTE: *Refer to Table 6-1, Personality Ranges/Defaults, and in this Service Manual for the recommended factory settings.*

NOTE: *Password 33271 will give you access to level 1, which will permit you to change all machine personality settings.*

There is a setting that JLG strongly recommends that you do not change. This setting is so noted below:

ELEVATION CUTBACK

⚠ WARNING

CHANGING THIS SETTING MAY ADVERSELY AFFECT THE PERFORMANCE OF YOUR MACHINE.

⚠ IMPORTANT

ITS IS A GOOD PRACTICE TO AVOID PRESSURE-WASHING ELECTRICAL/ELECTRONIC COMPONENTS. SHOULD PRESSURE-WASHING BE UTILIZED TO WASH AREAS CONTAINING ELECTRICAL/ELECTRONIC COMPONENTS, JLG INDUSTRIES INC. RECOMMENDS A MAXIMUM PRESSURE OF 750 PSI (52 BAR) AT A MINIMUM DISTANCE OF 12 INCHES (30.5CM) AWAY FROM THESE COMPONENTS. IF ELECTRICAL/ELECTRONIC COMPONENTS ARE SPRAYED, SPRAYING MUST NOT BE DIRECT AND BE FOR BRIEF TIME PERIODS TO AVOID HEAVY SATURATION.

6.7 LEVEL VEHICLE DESCRIPTION

⚠ IMPORTANT

A NEW TILT MODULE WILL ACT AS IF IT IS TILTED ALL OF THE TIME UNTIL THE FOLLOWING PROCEDURE IS PERFORMED.

⚠ WARNING

DO NOT CALIBRATE THE LEVEL SENSOR EXCEPT ON A LEVEL SURFACE.

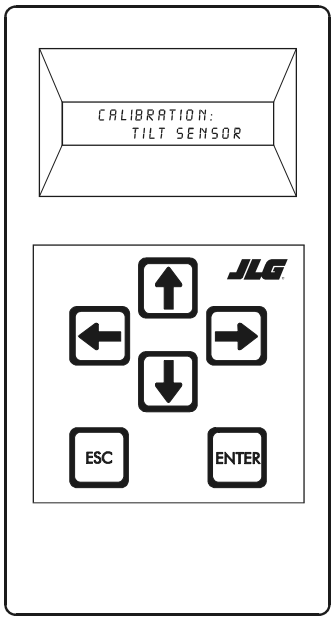

Place machine in stowed position with the boom between the rear wheels.

To level machine chose:

CALIBRATION:
TILT SENSOR

Press ENTER.

When prompted, swing machine 180°

Press ENTER.

PREVIEW - YOUFIXTHIS.COM

Download full manual at youfixthis.com

PREVIEW ONLY

You're viewing 12 of 218 pages

The full manual includes:

- All 218 pages, complete
- Searchable PDF (find any keyword)
- No watermarks
- Instant download
- Print-ready quality

GET FULL MANUAL NOW

JLG 601S Service Manual

Scan or click anywhere
youfixthis.com

Click anywhere on this page to get the full manual