2.2 TORQUE CHARTS

2.2.1 SAE Fastener Torque Chart

Blurred on purpose. The manual you buy has this page in full quality.

PREVIEW - YOUFIXTHIS.COM

Download full manual at youfixthis.com

3.4 COMPLETE BOOM REMOVAL/ INSTALLATION

3.4.1 Complete Boom Removal

1. Remove any attachment from the quick switch assembly. Refer to the appropriate operation and safety manual.
2. Remove the quick switch assembly. Refer to *Section 3.9.1, "Quick Switch Removal."*
3. If equipped, remove the Boom Head Mounted Winch. Refer to *Section 3.10.1, "Boom Head-Mounted Winch Removal."*
4. Park the machine on a hard, level surface, level the machine, fully retract the boom, raise the boom, place the transmission control lever in (N) NEUTRAL, engage the park brake and shut the engine OFF.
5. Place a Do Not Operate Tag on both the ignition key switch and the steering wheel, stating that the machine should not be operated.
6. Open the engine cover. Allow the system fluids to cool.
7. Properly disconnect the battery.
8. Support the front of the boom by placing a sling behind the boom head.
9. Label, disconnect and cap all hydraulic hoses for the extend/retract and tilt circuits. Cap all fittings and openings to keep dirt & debris from entering the hydraulic system.
10. Support the lift/lower cylinder on the left side of the machine. Remove the lock bolt and rod end pin. Lower the lift/lower cylinder onto the frame rails. Repeat this step for the right side lift/lower cylinder.
11. Support the compensation cylinder. Remove the lock bolt and rod end pin. Lower the compensation cylinder onto the frame rails.
12. Lower the boom to a level position and place a suitable support under the boom head. Reposition the slings to each end of the boom.
13. Remove the bolt securing the boom pivot pin. Pull out the boom pivot pin.
14. Lift the complete boom off machine and set on level ground or supports.

3.4.2 Complete Boom Installation

1. Park the machine on a hard, level surface, place the transmission control lever in (N) NEUTRAL, engage the park brake, chock the wheels and shut the engine OFF.
2. Using suitable slings, balance the boom assembly, lift and carefully guide the boom into place. Align the frame pivot bore with the boom assembly pivot bore.
3. Install the boom pivot pin.
4. With the sling still in place, install the compensation cylinder, pins and bolts.
5. With the sling still in place, install the rod end of the left lift/lower cylinder, pin and lock bolt. Repeat for the right side lift/lower cylinder.

Note: *Raising the boom up or down with the sling may be necessary so the boom, compensation and lift/lower cylinder bores can be aligned for easier pin installation.*

Note: *Grease the boom pivot bore, compensation cylinder rod ends, lift/lower cylinder rod end and pins before installing.*

6. Uncap and reconnect the previously labeled hydraulic hoses to the extend/retract cylinder.
7. Uncap and connect any remaining hydraulic fittings to their appropriate locations.
8. Recheck the wear pad gaps to ensure they meet the minimum gap requirement. Shim if necessary.
9. Ensure that the boom chains are properly adjusted. Refer to Section 3.7, "Boom Section Separation Adjustment."
10. Properly connect the battery.
11. Start the engine and operate all boom functions several times. Check for leaks, and check the hydraulic fluid level in the reservoir; add fluid if required.
12. Install the quick switch assembly. Refer to *Section 3.9.2, "Quick Switch Installation."*
13. If equipped, install the Boom Head Mounted Winch. Refer to *Section 3.10.2, "Boom Head-Mounted Winch Installation."*
14. Clean up all debris, hydraulic fluid, etc., in, on, near and around the machine.
15. Close and secure the engine cover.
16. Remove the Do Not Operate Tags from both the ignition key switch and the steering wheel.
17. Install the previously remove attachment to the quick switch assembly. Refer to the appropriate operation and safety manual.

PREVIEW - YOUFIXTHIS.COM

Download full manual at youfixthis.com

3.14 TROUBLESHOOTING

This section provides an easy reference guide covering the most common problems that occur during operation of the boom.

Problem	Cause	Remedy
1. Boom will not extend or retract	1. Broken hydraulic hose(s) or tube(s) and/or connections leaking.	1. Locate break, replace hose(s) or tube(s), tighten connections.
	2. Extend/retract hydraulic system not operating properly.	2. Refer to Section 8.4, “Hydraulic Circuits.”
	3. Faulty extend/retract cylinder.	3. Repair cylinder, Refer to Section 8.8, “Hydraulic Cylinders.”
2. Boom shifts to right or left when extending.	1. Boom side wear pads improperly shimmed or worn.	1. Shim wear pads to correct gap. Replace wear pads as needed. Refer to Section 3.11, “Boom Wear Pads.”
3. Excessive boom pivot pin noise and/or wear.	1. Insufficient lubrication.	1. Lubricate at regular intervals. Refer to Section 2.6, “Lubrication Schedules.” Replace worn pins as needed.
	2. Worn bearing(s).	2. Replace bearing(s) and lubricate at regular intervals. Refer to Section 2.6, “Lubrication Schedules.”
4. Excessive Compensation cylinder pivot pin noise and/ or wear.	1. Insufficient lubrication.	1. Lubricate at regular intervals. Refer to Section 2.6, “Lubrication Schedules.” Replace worn pins as needed.
	2. Worn bushing(s).	2. Replace bushing(s) and lubricate at regular intervals.

PREVIEW - YOUFIXTHIS.COM

Download full manual at youfixthis.com

8.4.3 Hydraulic Schematic



Blurred on purpose. The manual you buy has this page in full quality.

PREVIEW - YOUFIXTHIS.COM

Download full manual at youfixthis.com

9.5 ELECTRICAL SYSTEM SCHEMATICS

9.5.1 Cab Schematic - John Deere

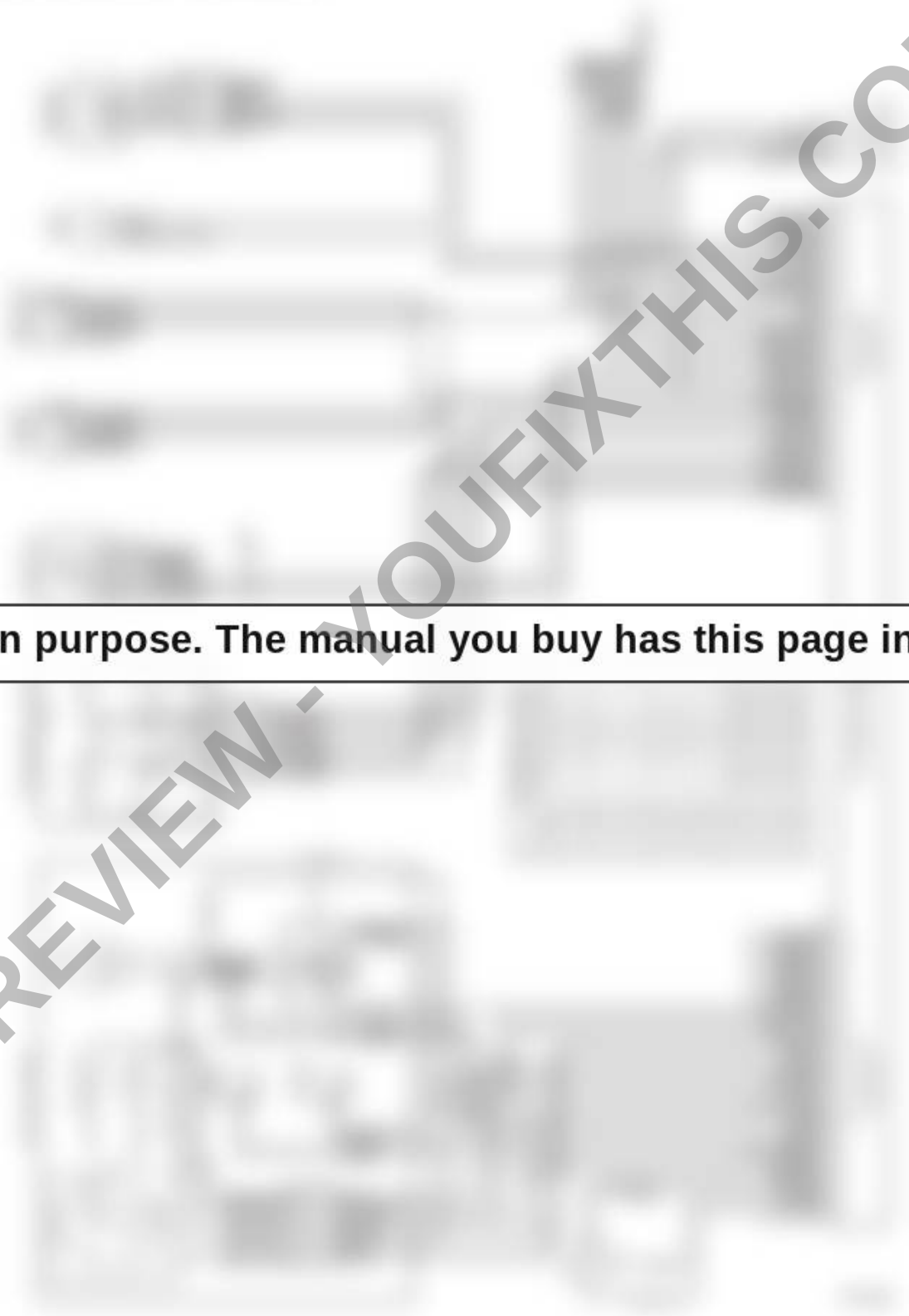

Blurred on purpose. The manual you buy has this page in full quality.

PREVIEW - YOUFIXTHIS.COM

Download full manual at youfixthis.com

9.13 TROUBLESHOOTING - JOHN DEERE

9.13.1 Engine Fault Codes Retrieval

1. Park the machine on a firm, level surface, level the machine, fully retract the boom, lower the boom, place the transmission control lever in (N) NEUTRAL and engage the park brake.
2. Turn the ignition switch to “ON”.
3. Push down and hold the Reset button on the dash for 3-5 seconds. The fault lamp will begin to flash a code number.
   The light will flash the first digit then pause for a short time and then flash the second digit. If there are “active” codes, the system will first flash code 32. If there are no “active” codes, the system will flash code 88. The system will then flash code 33 if there are any “stored” fault codes. If there are no “stored” codes, the system will flash code 88.
4. Once the code is retrieved, turn the ignition OFF.

Note: *When the engine sensor inputs exceed normal operating ranges, the ECU will derate the amount of fuel that is delivered to the engine. A fault code will always accompany a fuel derate. If the engine is running at a much lower rate, check the fault codes first to see if the engine is experiencing an internal problem.*

9.13.2 Engine Fault Codes Chart

Fault Codes	SPN Codes	FMI Codes	Definition
11	N/A	N/A	Analog Throttle (A) Input High
12	N/A	N/A	Analog Throttle (B) Input High
18	110	3	Engine Coolant Temperature Input Voltage High
19	110	4	Engine Coolant Temperature Input Voltage Low
21	620	3	Sensor Supply Voltage High
	1079	3	Sensor Supply Voltage High
22	620	4	Sensor Supply Voltage Low
	1079	4	Sensor Supply Voltage Low
23	100	3	Engine Oil Pressure Input Voltage High
24	100	4	Engine Oil Pressure Input Voltage Low
25	105	3	Manifold Air Temperature Input Voltage High
26	105	4	Manifold Air Temperature Input Voltage Low
28	629	13	ECU Error
32	N/A	N/A	Signifies Start of Active Fault Codes
33	N/A	N/A	Signifies Start of Previously Active Fault Codes
37	174	3	Fuel Temperature Input Voltage High
38	174	4	Fuel Temperature Input Voltage Low
39	637	2	Crank Position Input Noise

PREVIEW - YOUFIXTHIS.COM

Download full manual at youfixthis.com

SECTION CONTENTS

Section	Subject	Page
Section 1		
Safety Practices		**1-1**
1.1	Introduction	1-2
1.2	Disclaimer	1-2
1.3	Operation & Safety Manual	1-2
1.4	Do Not Operate Tags	1-2
1.5	Safety Information	1-2
1.6	Safety Instructions	1-3
1.7	Safety Decals	1-4
Section 2		
General Information and Specifications		**2-1**
2.1	Replacement Parts and Warranty Information	2-2
2.2	Torque Charts	2-3
2.3	Specifications	2-11
2.4	Fluid and Lubricant Capacities	2-15
2.5	Service and Maintenance Schedules	2-17
2.6	Lubrication Schedules	2-20
Section 3		
Boom		**3-1**
3.1	Boom System Component Terminology	3-3
3.2	Boom System - Four Section	3-4
3.3	Boom Assembly Maintenance	3-4
3.4	Complete Boom Removal/Installation	3-5
3.5	Boom Section Removal/Installation	3-6
3.6	Extend/Retract Chain Removal/Installation	3-16
3.7	Boom Section Separation Adjustment	3-18
3.8	Hose Carrier Assembly Removal/Installation	3-20
3.9	Quick Switch Assembly	3-23
3.10	Boom Head - Mounted Winch	3-24
3.11	Boom Wear Pads	3-24
3.12	Boom Extend and Retract Chains	3-25
3.13	Forks	3-29
3.14	Troubleshooting	3-30
Section 4		
Cab and Covers		**4-1**
4.1	Operator’s Cab and Covers Component Terminology	4-2
4.2	Operator’s Cab	4-3
4.3	Cab Components	4-3
4.4	Cab Removal	4-8
4.5	Cab Installation	4-9

PREVIEW - YOUFIXTHIS.COM

Download full manual at youfixthis.com

1.1 INTRODUCTION

This service manual provides general directions for accomplishing service and repair procedures. Following the procedures in this manual will help assure safety and equipment reliability.

Read, understand and follow the information in this manual, and obey all locally approved safety practices, procedures, rules, codes, regulations and laws.

These instructions cannot cover all details or variations in the equipment, procedures, or processes described, nor provide directions for meeting every possible contingency during operation, maintenance, or testing. When additional information is desired consult the local distributor.

Many factors contribute to unsafe conditions: carelessness, fatigue, overload, inattentiveness, unfamiliarity, even drugs and alcohol, among others. For optimal safety, encourage everyone to think, and to act, safely.

Appropriate service methods and proper repair procedures are essential for the safety of the individual doing the work, for the safety of the operator, and for the safe, reliable operation of the machine. All references to the right side, left side, front and rear are given from the operator's seat looking in a forward direction.

Supplementary information is available from JLG in the form of Service Bulletins, Service Campaigns, Service Training Schools, the JLG website, other literature, and through updates to the manual itself.

1.2 DISCLAIMER

All information in this manual is based on the latest product information available at the time of publication. JLG reserves the right to make changes and improvements to its products, and to discontinue the manufacture of any product, at its discretion at any time without public notice or obligation.

1.3 OPERATION & SAFETY MANUAL

The mechanic must not operate the machine until the Operation & Safety Manual has been read & understood, training has been accomplished and operation of the machine has been completed under the supervision of an experienced and qualified operator.

An Operation & Safety Manual is supplied with each machine and must be kept in the manual holder located in the cab. In the event that the Operation & Safety Manual is missing, consult the local distributor before proceeding.

1.4 DO NOT OPERATE TAGS

Place Do Not Operate Tags on the ignition key switch and the steering wheel before attempting to perform any service or maintenance. Remove key and disconnect battery leads.

1.5 SAFETY INFORMATION

To avoid possible death or injury, carefully read, understand and comply with all safety messages.

In the event of an accident, know where to obtain medical assistance and how to use a first-aid kit and fire extinguisher/fire suppression system. Keep emergency telephone numbers (fire department, ambulance, rescue squad/paramedics, police department, etc.) nearby. If working alone, check with another person routinely to help assure personal safety.

1.5.1 Safety Alert System and Signal Words

DANGER

DANGER indicates an imminently hazardous situation which, if not avoided, will result in death or serious injury.

WARNING

WARNING indicates a potentially hazardous situation which, if not avoided, could result in death or serious injury.

CAUTION

CAUTION indicates a potentially hazardous situation which, if not avoided, may result in minor or moderate injury.

PREVIEW - YOUFIXTHIS.COM

Download full manual at youfixthis.com

Section	Subject	Page
Section 5		
Axles, Drive Shafts, Wheels and Tires		**5-1**
5.1	Axle, Drive Shaft and Wheel Component Terminology	5-2
5.2	General Information	5-3
5.3	Axle Assemblies	5-3
5.4	Drive Shafts	5-9
5.5	Wheels and Tires	5-10
5.6	Brakes	5-11
5.7	Towing a Disabled machine	5-11
Section 6		
Transmission		**6-1**
6.1	Transmission Assembly Component Terminology	6-2
6.2	Transmission Serial Number	6-3
6.3	Transmission Specifications And Maintenance Information	6-3
6.4	Transmission Replacement	6-3
6.5	Torque Convertor Diaphragm	6-6
6.6	Troubleshooting	6-7
Section 7		
Engine		**7-1**
7.1	Introduction - John Deere	7-2
7.2	Introduction - Perkins	7-4
7.3	Introduction - Cummins	7-6
7.4	Engine Cooling System	7-8
7.5	Engine Electrical System	7-10
7.6	Fuel System	7-10
7.7	Engine Exhaust System	7-12
7.8	Air Cleaner Assembly	7-13
7.9	Engine Replacement	7-14
7.10	Troubleshooting	7-17
Section 8		
Hydraulic System		**8-1**
8.1	Hydraulic Component Terminology	8-2
8.2	Safety Information	8-3
8.3	Hydraulic Pressure Diagnosis	8-3
8.4	Hydraulic Circuits	8-4
8.5	Hydraulic Reservoir	8-13
8.6	Implement Pump	8-14
8.7	Control Valves	8-15
8.8	Hydraulic Cylinders	8-21
Section 9		
Electrical System		**9-1**
9.1	Electrical Component Terminology	9-3
9.2	Specifications	9-6
9.3	Safety Information	9-6
9.4	Fuses and Relays	9-6
9.5	Electrical System Schematics	9-10
9.6	Circuit Breakdowns	9-22

PREVIEW - YOUFIXTHIS.COM

Download full manual at youfixthis.com

2. Place a Do Not Operate Tag on both the ignition key switch and the steering wheel, stating that the machine should not be operated.
3. Properly disconnect the battery.
4. Secure the boom sections together to prevent uncontrolled boom run out when the extend chains are removed.
5. On the chain being removed, loosen and remove the jam nut from the rear chain clevis and back off the adjusting nut on the chain clevis to the end of the threads. Do not completely remove the nut.
6. Remove the chain clevis pin and retaining ring to free the chain.
7. Install the nylon tie wrap through the holes in the chain, making a loop with the tie wrap and tie a rope to the loop.
8. Pull the slack to the chain clevis at the front of the boom.
9. Remove the clevis pin and the retaining ring from the chain and chain clevis.
10. Install a nylon tie wrap through the chain holes, forming a loop and tie a rope to the loop.
11. Carefully pull the chain out of the boom.
12. Untie the rope and leave it in place for reinstallation of the chain.

3.6.4 Extend Chain Installation

The following section explains the installation of the retract chains without removing the boom assemblies.

Inspect and lubricate chains thoroughly before installation.

1. Fasten the previously used rope to the end of the extend chain.
2. Carefully pull the chain into the boom to the chain clevis anchor.
3. Fasten the chain to clevis with a pin and cotter pin.
4. At the other end of the chain, connect the chain to the clevis fastening the chain to the clevis with a pin and retaining ring.
5. Install the chain clevis fastening and adjusting hardware on both ends.
6. Remove any clamping devises being used to keep the boom sections from moving.
7. Properly connect the battery.
8. Adjust the extend chains as needed. Refer to Section 3.7, “Boom Section Separation Adjustment.”
9. Remove the Do Not Operate Tags from both the ignition key switch and the steering wheel.

3.7 BOOM SECTION SEPARATION ADJUSTMENT

1. Start the machine and verify the boom is in a horizontal (level) position.
2. Extend the boom 4-5 ft (1,2-1,5 m), then fully retract the boom.
3. Shut machine OFF.

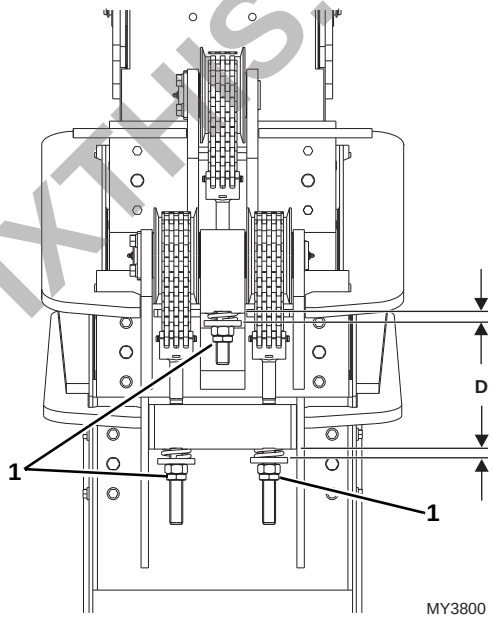

4. Measure the gap (**D**) between the flat washer at the extend chain anchor on the top front of the first boom section and the second boom section. If the gap is greater that 0.375 in (9.52 mm), the boom chains will need to be adjusted.

Adjust the extend chain as follows:

1. Loosen the lock nut (**1**) on each of the extend chains.
2. Tighten the adjusting nuts on the first boom section until the gap (**D**) between the flat washers and boom is 0.375 in (9,52 mm) maximum. The gap must be equal on both chains. Torque the lock nut to 100 lb-ft (135 Nm).

Note: *Verify the exposed threads on both extend chain clevises are kept equal.*

3. Tighten the adjusting nut on the second boom section until the gap (**D**) between the washer and boom is 0.375 in (9,52 mm) maximum. Torque the lock nut to 100 lb-ft (135 Nm).

PREVIEW - YOUFIXTHIS.COM
Download full manual at youfixthis.com

7.1 INTRODUCTION - JOHN DEERE

7.1.1 Disclaimer and Scope

These instructions are written for worldwide use. In territories where legal requirements govern engine smoke emission, noise, safety factors, etc., apply all instructions, data and dimensions provided herein in such a way that after maintenance, service and repair of the engine, engine operation does not violate local regulations.

Note: *These instructions cover only the routine maintenance, removal, installation and troubleshooting of the engine. Refer to the local Engine Distributor and the applicable Engine Service Manual for assistance with comprehensive engine diagnosis, repair and component replacement. A gradual running-in (break-in) of a new engine is not necessary. Full load can be applied to a new engine as soon as the engine is put into service and the coolant temperature is at least 140° F (60° C). Extended light-load operation during the early life of the engine is not recommended.* ***DO NOT*** *run the engine at high, no-load speeds.* ***DO NOT*** *apply an overload to the engine.*

7.1.2 Engine Serial Number

The John Deere 4045HF275 serial number Is stamped on a plate which is secured to the engine block, near the fuel injector pump. Information contained in the serial number is required in correspondence with the engine manufacturer.

7.1.3 Specifications and Maintenance Information

For engine, coolant and oil specifications, and maintenance information, refer to Section 2, “General Information and Specifications.”

Detailed John Deere engine service instructions (covering disassembly, inspection, internal repair, assembly, adjustment and troubleshooting information) are provided in the appropriate John Deere engine service manual.

For engine electrical related issues, refer to the John Deere Engine Troubleshooting Manual (P/N 31200371).

PREVIEW - YOUFIXTHIS.COM

Download full manual at youfixthis.com

9.2 SPECIFICATIONS

Electrical system specifications are listed in Section 2, “General Information and Specifications.”

9.3 SAFETY INFORMATION

WARNING

DO NOT service the machine without following all safety precautions as outlined in Section 1, “Safety Practices,” of this manual.

9.4 FUSES AND RELAYS

9.4.1 Engine Compartment

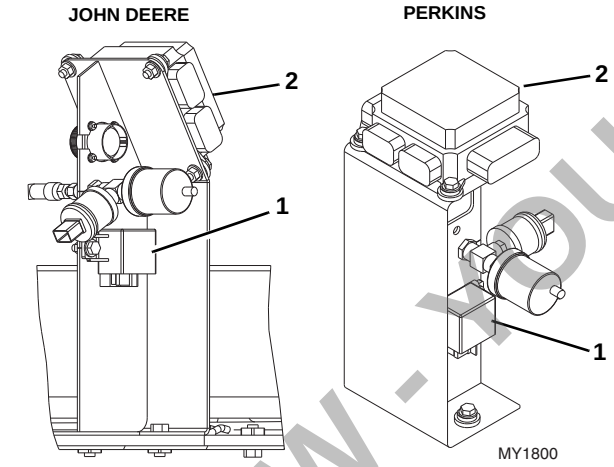

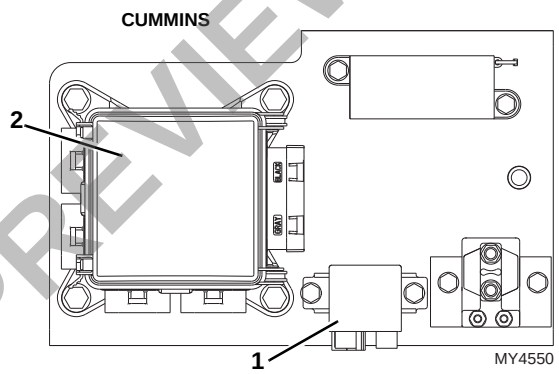

The starter relay (**1**) and power distribution unit (**2**) is located on the power distribution unit bracket in the engine compartment.

9.4.2 Cab

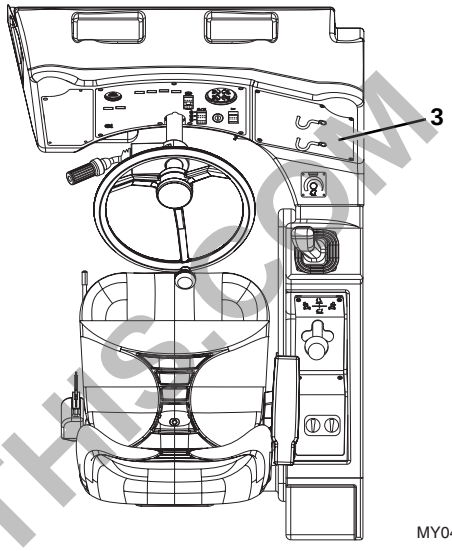

The optional power distribution unit is located in the cab. For access, remove the screws securing the load chart panel (**3**) to the dash.

PREVIEW - YOUFIXTHIS.COM

Download full manual at youfixthis.com

PREVIEW ONLY

You're viewing 12 of 200 pages

The full manual includes:

- All 200 pages, complete
- Searchable PDF (find any keyword)
- No watermarks
- Instant download
- Print-ready quality

GET FULL MANUAL NOW

JLG G10-55A, G12-55A Service Manual

Scan or click anywhere
youfixthis.com

Click anywhere on this page to get the full manual