Metric Bolt and Cap Screw Torque Values

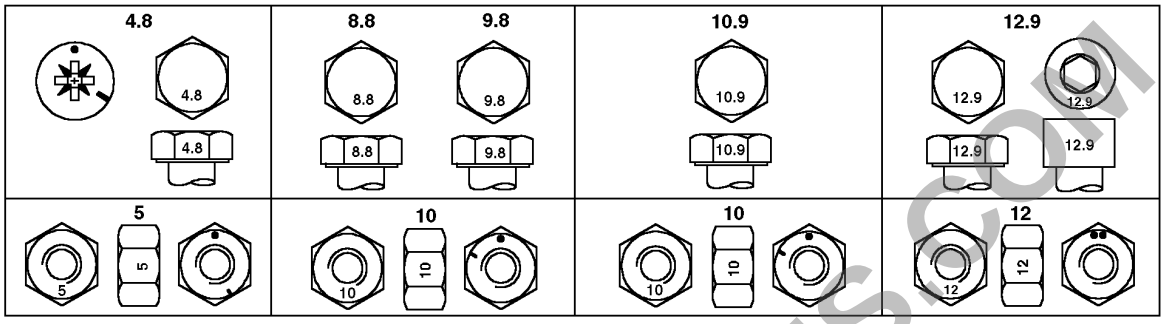

TORQ2 –UN–07SEP99

Top—Property Class and Head Markings; Bottom—Property Class and Nut Markings

METRIC BOLT AND CAP SCREW TORQUE VALUES—Tolerance is ±10% unless otherwise specified

	Class 4.8		Class 8.8 or 9.8		Class 10.9		Class 12.9	
Thread Size	Lubricated[a] N•m (lb-ft)	Dry[b] N•m (lb-ft)	Lubricated[a] N•m (lb-ft)	Dry[b] N•m (lb-ft)	Lubricated[a] N•m (lb-ft)	Dry[b] N•m (lb-ft)	Lubricated[a] N•m (lb-ft)	Dry[b] N•m (lb-ft)
M6	4.7 (3.5)	6 (4.4)	9 (6.6)	11.5 (8.5)	13 (9.5)	16.5 (12.2)	15.5 (11.5)	19.5 (14.5)
M8	11.5 (8.5)	14.5 (10.7)	22 (16)	28 (20.5)	32 (23.5)	40 (29.5)	37 (27.5)	47 (35)
M10	23 (17)	29 (21)	43 (32)	55 (40)	63 (46)	80 (59)	75 (55)	95 (70)
M12	40 (29.5)	50 (37)	75 (55)	95 (70)	110 (80)	140 (105)	130 (95)	165 (120)
M14	63 (46)	80 (59)	120 (88)	150 (110)	175 (130)	220 (165)	205 (150)	260 (190)
M16	100 (74)	125 (92)	190 (140)	240 (175)	275 (200)	350 (255)	320 (235)	400 (300)
M18	135 (100)	170 (125)	265 (195)	330 (245)	375 (275)	475 (350)	440 (325)	560 (410)
M20	190 (140)	245 (180)	375 (275)	475 (350)	530 (390)	675 (500)	625 (460)	790 (580)
M22	265 (195)	330 (245)	510 (375)	650 (480)	725 (535)	920 (680)	850 (625)	1080 (800)
M24	330 (245)	425 (315)	650 (480)	820 (600)	920 (680)	1150 (850)	1080 (800)	1350 (1000)
M27	490 (360)	625 (460)	950 (700)	1200 (885)	1350 (1000)	1700 (1250)	1580 (1160)	2000 (1475)
M30	660 (490)	850 (625)	1290 (950)	1630 (1200)	1850 (1350)	2300 (1700)	2140 (1580)	2700 (2000)
M33	900 (665)	1150 (850)	1750 (1300)	2200 (1625)	2500 (1850)	3150 (2325)	2900 (2150)	3700 (2730)
M36	1150 (850)	1450 (1075)	2250 (1650)	2850 (2100)	3200 (2350)	4050 (3000)	3750 (2770)	4750 (3500)

[a] *"Lubricated" means coated with a lubricant such as engine oil, or fasteners with phosphate and oil coatings.*

[b] *"Dry" means plain or zinc plated without any lubrication.*

CAUTION: Use only metric tools on metric hardware. Other tools may not fit properly. Tool may slip and cause injury.

DO NOT use these values if a different torque value or tightening procedure is given for a specific application. Torque values listed are for general use only. Check tightness of fasteners periodically.

Shear bolts are designed to fail under predetermined loads. Always replace shear bolts with identical property class.

Fasteners should be replaced with the same or higher property class. If higher property class fasteners are used, these should only be tightened to the strength of the original.

Make sure fastener threads are clean and that you properly start thread engagement. This will prevent them from failing when tightening.

Tighten plastic insert or crimped steel-type lock nuts to approximately 50 percent of the dry torque shown in the chart, applied to the nut, not to the bolt head. Tighten toothed or serrated-type lock nuts to the full torque value.

OUT3035,TORQUE2 –19–22MAR06–1/1

PREVIEW - YOUFIXTHIS.COM
Download full manual at youfixthis.com

Track Roller Remove and Install

1. Swing upperstructure 90° and lower bucket to raise track off ground. Keep angle between boom and arm 90—110° and position round side of bucket on ground.

CAUTION: Prevent possible injury from unexpected machine movement. Position shop stands under frame to support machine while removing lower track roller.

Specification

Machine—Weight (Approximate)	18 151 kg 39 980 lb

2. Put shop stands under machine.

OUO6046,00022F1 –19–03APR07–1/3

CAUTION: Prevent possible injury from high pressure grease. Do not remove grease fitting (A) from valve (B).

3. Loosen valve (B) one to two turns to release grease through bleed hole (C).

A—Grease Fitting
B—Valve
C—Bleed Hole

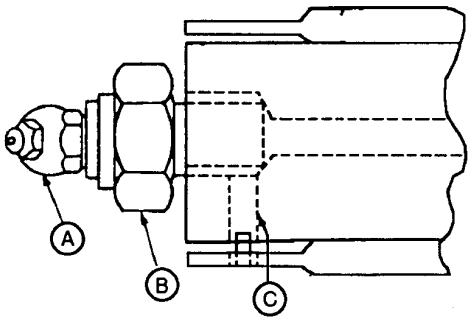

T7396DZ –UN–28NOV90

Continued on next page

OUO6046,00022F1 –19–03APR07–2/3

PREVIEW - YOUFIXTHIS.COM

Download full manual at youfixthis.com

Track Roller Disassemble and Assemble

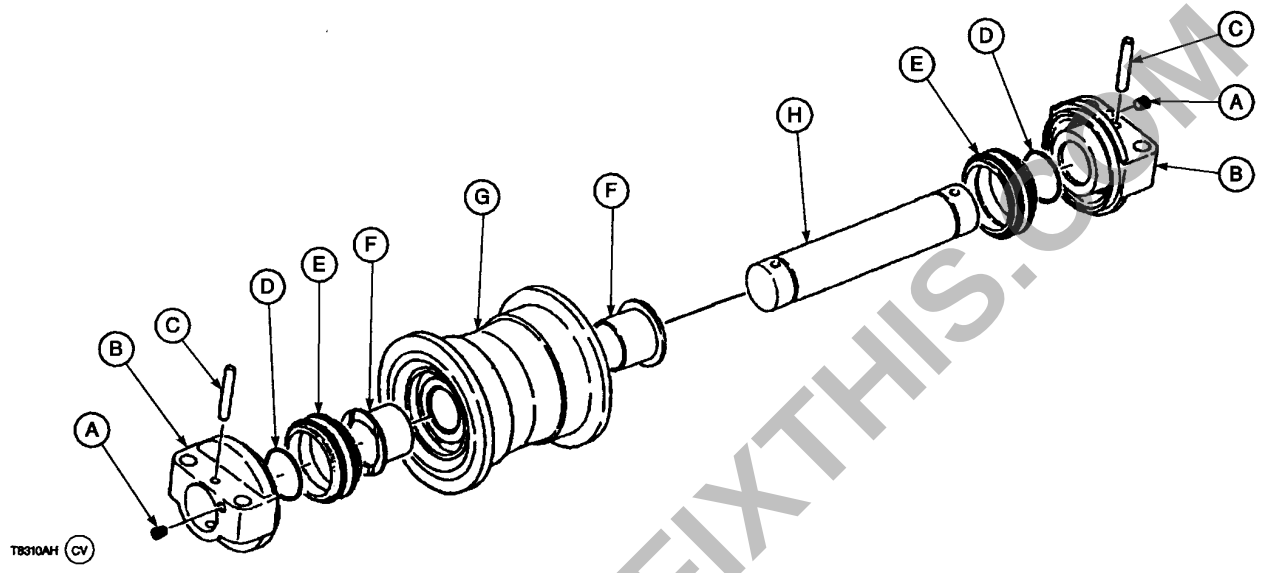

T8310AH –UN–21SEP94

A—Plug (2 used)
B—Bracket (2 used)
C—Pin (2 used)
D—O-Ring (2 used)
E—Metal Face Seal (2 used)
F—Bushing (2 used)
G—Roller
H—Axle

1. Remove plug (A) and drain oil.
2. Remove pin (C).
3. Remove bracket (B) using a bearing puller attachment and adapters from puller set.

IMPORTANT: Metal face seals can be reused if they are not worn or damaged. A used seal must be kept together as a set because of wear patterns on seal ring face.

4. Remove metal face seal (E) from roller and bracket. Keep seal rings together as a matched set with seal ring faces together to protect surfaces.
5. Inspect metal face seals. See Metal Face Seals Repair. (Group 0130.)
6. Remove axle (H) from roller.

NOTE: Only remove bushings if replacement is necessary.

7. Remove bushings (F) using a 2-jaw puller and adapters from puller set.
8. Replace parts as necessary.

   Apply a thin film of oil to bushings (F) and install.

IMPORTANT: O-rings and seat surfaces for O-rings must be clean, dry, and oil free so O-rings do not slip when roller is turning.

9. Thoroughly clean O-rings and seat surfaces in brackets (B) and in seal rings using volatile, non-petroleum base solvent and lint-free tissues.
10. Install seals (E) in brackets (B) and in roller (G). Apply equal pressure with fingers at four equally spaced points on seal face. Seal must “pop” down into place so O-ring is tight against seal bore. A volatile, non-petroleum base solvent or talcum powder may be used as a lubricant.

Continued on next page

OUO6046,00022F2 –19–19APR07–1/2

PREVIEW - YOUFIXTHIS.COM
Download full manual at youfixthis.com

Contents

SECTION 00—General Information
Group 01—Safety
Group 0003—Torque Values

SECTION 01—Tracks
Group 0130—Track System

SECTION 02—Axles, Differentials and Suspension Systems
Group 0250—Axle Shaft, Bearings, and Reduction Gears
Group 0260—Hydraulic System

SECTION 04—Engine
Group 0400—Removal and Installation

SECTION 05—Engine Auxiliary System
Group 0510—Cooling System
Group 0520—Intake System
Group 0560—External Fuel Supply System

SECTION 07—Dampener Drive (Flex Coupling)
Group 0752—Elements

SECTION 17—Frame or Supporting Structure
Group 1740—Frame Installation
Group 1749—Chassis Weights

SECTION 18—Operator's Station
Group 1800—Removal and Installation
Group 1810—Operator Enclosure
Group 1821—Seat and Seat Belt
Group 1830—Heating and Air Conditioning

SECTION 33—Excavator
Group 3302—Buckets
Group 3340—Frames
Group 3360—Hydraulic System

SECTION 43—Swing or Pivoting System
Group 4350—Mechanical Drive Elements
Group 4360—Hydraulic System

SECTION 99—Dealer Fabricated Tools
Group 9900—Dealer Fabricated Tools

All information, illustrations and specifications in this manual are based on the latest information available at the time of publication. The right is reserved to make changes at any time without notice.

COPYRIGHT © 2008
DEERE & COMPANY
Moline, Illinois
All rights reserved
A John Deere ILLUSTRUCTION® Manual
Previous Editions
Copyright © 2007

PREVIEW - YOUFIXTHIS.COM

Download full manual at youfixthis.com

Recognize Safety Information

This is the safety alert symbol. When this symbol is noticed on the machine or in this manual, be alert for the potential of personal injury.

Follow the precautions and safe operating practices highlighted by this symbol.

A signal word — DANGER, WARNING, or CAUTION — is used with the safety alert symbol. DANGER identifies the most serious hazards.

On the machine, DANGER signs are red in color, WARNING signs are orange, and CAUTION signs are yellow. DANGER and WARNING signs are located near specific hazards. General precautions are on CAUTION labels.



T133555 –UN–28AUG00

T133588 –19–28AUG00

TX03679,00016CC –19–03JAN07–1/1

Follow Safety Instructions

Read the safety messages in this manual and on the machine. Follow these warnings and instructions carefully. Review them frequently.

Be sure all operators of this machine understand every safety message. Replace operator's manual and safety labels immediately if missing or damaged.

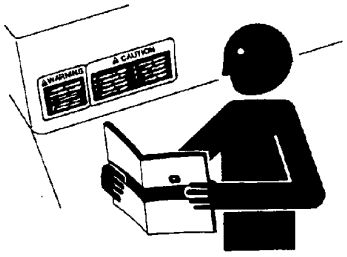

T133556 –UN–24AUG00

TX03679,00016F9 –19–03JAN07–1/1

Operate Only If Qualified

Do not operate this machine unless the operator's manual has been read carefully, and you have been qualified by supervised training and instruction.

Operator should be familiar with the job site and surroundings before operating. Try all controls and machine functions with the machine in an open area before starting to work.

Know and observe all safety rules that may apply to every work situation and work site.

TX03679,00016FA –19–08JAN08–1/1

PREVIEW - YOUFIXTHIS.COM
Download full manual at youfixthis.com

Index

Page

A

Air cleaner
Remove and install 05-0520-1
Air conditioner
Condenser, remove and install 18-1830-11
Receiver-dryer, remove and install 18-1830-17
Air conditioner and heater
Remove and install 18-1830-13
Air conditioner system
Flush and purge 18-1830-3
Refrigerant cautions and proper handling. 18-1830-1
Air conditioning
Charge R134a system 18-1830-10
Compressor, remove and install 18-1830-11
Evacuate R134a system 18-1830-9
Recover R134a refrigerant 18-1830-8
R134a refrigerant oil information 18-1830-6
R134a station installation 18-1830-7
Arm
Remove and install 33-3340-3
Arm cylinder
Bleed procedure 33-3360-106
Disassemble and assemble 33-3360-96
Inspect pins and bushings. 33-3340-11
Remove and install 33-3360-91
Arm pins and bushings
Inspect 33-3340-11
Attachments
Adding safely 00-01-11
Operating safely 00-01-11

B

Backover accidents
Avoiding 00-01-10
Battery explosions
Prevent 00-01-5
Bearing
Swing, disassemble and assemble 43-4350-16
Swing, remove and install 43-4350-14
Bleed procedure
Hydraulic cylinder 33-3360-106
Boom
Remove and install 33-3340-6
Boom cylinder
Bleed procedure 33-3360-106
Dissassemble and assemble. 33-3360-89
Inspect pins and bushings. 33-3340-11
Remove and install 33-3360-85

Page

Boom flow rate solenoid valve
Remove and install 33-3360-46
Boom mode solenoid valve
Remove and install 33-3360-46
Boom pins and bushings
Inspect 33-3340-11
Boom, arm, and bucket bushings and bosses
Inspect 33-3340-11
Boom, arm, and bucket pins
Inspect 33-3340-11
Brake
Swing park, inspection 43-4360-12
Swing park, remove and install 43-4360-6
Brake, park and travel motor
Disassemble and assemble 02-0260-10
Remove and install 02-0260-2
Bucket
Remove and install 33-3302-1
Bucket cylinder
Bleed procedure 33-3360-106
Disassemble and assemble 33-3360-103
Inspect pins and bushings. 33-3340-11
Remove and install 33-3360-99
Bucket links
Remove and install 33-3340-1
Bucket pins
Inspect 33-3340-11
Bushings
Remove and install 33-3340-14

C

Cab
Remove and install 18-1800-1
Cab guarding 00-01-3
Center joint
Air test 43-4360-5
Disassemble and assemble 43-4360-4
Remove and install 43-4360-1
Check valve, make-up
Remove and install 02-0260-17
Chemical products
Handling 00-01-6
Condenser, air conditioner
Remove and install 18-1830-11
Console covers
Remove and install 18-1821-5
Control valve
Arm reduced leakage valve. 33-3360-63
Arm regenerative valve 33-3360-71

PREVIEW - YOUFIXTHIS.COM

Download full manual at youfixthis.com

PREVIEW - YOUFIXTHIS.COM

Download full manual at youfixthis.com

O-RING STRAIGHT, ADJUSTABLE, AND EXTERNAL HEX PLUG WITH SAE INCH STUD END FOR HIGH PRESSURE, ABOVE 27 600 kPa (276 bar) (4000 psi), TORQUE VALUES—Tolerance is +15 -20% unless otherwise specified			
Thread Size	**Straight Hex Size[a]**	**Adjustable Nut Hex Size**	**Steel or Gray Iron Torque**
in.	**in.**	**in.**	**N•m (lb-ft)**
3/8-24	5/8	9/16	18 (13)
7/16-20	5/8	5/8	24 (18)
1/2-20	3/4	11/16	30 (22)
9/16-18	3/4	3/4	37 (27)
3/4-16	7/8	15/16	75 (55)
7/8-14	1-1/16	1-1/16	103 (76)
1-1/16-12	1-1/4	1-3/8	177 (131)
1-3/16-12	1-3/8	1-1/2	231 (170)
1-5/16-12	1-1/2	1-5/8	270 (199)
1-5/8-12	1-3/4	1-7/8	286 (211)
1-7/8-12	2-1/8	2-1/8	326 (240)
[a] Straight hex size applies to fittings only and may not be the same as the corresponding plug of the same thread size.			

1. Inspect fitting and connector sealing surfaces and the O-rings. They must be free of dirt, scratches, nicks, and burrs. O-ring must be free of dirt, cuts, cracks, swelling or flatten condition.

2. Back the stud end hex nut off as far as possible. Push backup washer towards the nut to fully expose the turn down section. Washer must fit turned down section and not be too loose

3. Lubricate O-rings using a thin film of clean hydraulic oil or as needed, petroleum jelly to hold O-ring in place.

   Install O-ring into groove making sure it is seated at the bottom. Excess petroleum jelly will prevent seating of O-ring and cause it to pop out.

   To protect an O-ring from threads, wrap electrical tape over the threads. Slide O-ring over the tape into the turned down section. Remove the tape.

4. Turn fitting into the boss by hand until face of nut or washer squeezes the O-ring into the seat and contacts face of boss. Loosen adjustable fittings no more than one turn for alignment.

   Hold connections together while tightening nut to ensure O-ring remains in place.

5. Tighten fitting or nut to torque value shown. Use a second wrench to hold the fitting in position or to keep hose from twisting while tightening nut.

OUT3035,0000420 –19–14JAN04–2/2

PREVIEW - YOUFIXTHIS.COM

Download full manual at youfixthis.com

3. Slide track adjuster (A) forward, using a pry bar.

CAUTION: Heavy component; use appropriate lifting device.

Specification

Track Adjuster Cylinder and Recoil Spring—Weight	125 kg 280 lb

4. Attach appropriate lifting device to track adjuster and remove from frame.

5. Repair or replace parts as necessary. See Track Adjuster and Recoil Spring Disassemble and Assemble. (Group 0130.)

6. Install front idler. See Front Idler Remove and Install. (Group 0130.)

7. Install track chain. See Track Chain Remove and Install. (Group 0130.)



A—Track Adjuster

OUO6046,00022FD –19–10APR07–2/2

PREVIEW - YOUFIXTHIS.COM

Download full manual at youfixthis.com

Counterbalance Valve Remove and Install

CAUTION: High pressure release of oil from pressurized system can cause serious burns or penetrating injury. Relieve pressure by pushing pressure relief button (1).

1. Push pressure relief button (1).
2. Drain oil from hydraulic oil tank or pull vacuum in hydraulic oil tank using vacuum pump. See Apply Vacuum to Hydraulic Oil Tank. (Group 3360.) The approximate capacity of hydraulic oil tank is 120.4 L (31.8 gal).
3. Disconnect battery ground (negative) cable.
4. Remove cover from track frame.

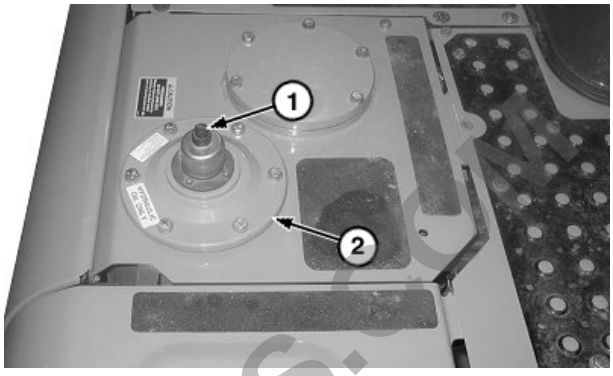

TX1020196A –UN–07MAR07

1—Pressure Relief Button
2—Hydraulic Oil Tank Cover

02
0260
13

Continued on next page

FS41334,0000151 –19–13APR07–1/3

PREVIEW - YOUFIXTHIS.COM

Download full manual at youfixthis.com

Fuel Cooler Remove and Install

1. Tag and disconnect fuel hoses (1 and 4).
2. Remove cap screws (3) and fuel cooler (2).
3. Repair or replace as necessary.
4. Install cooler and connect hoses.
5. Install air filter assembly.

1—Fuel Return Hose
2—Fuel Cooler
3—Cap Screws (4 used)
4—Fuel Supply Hose

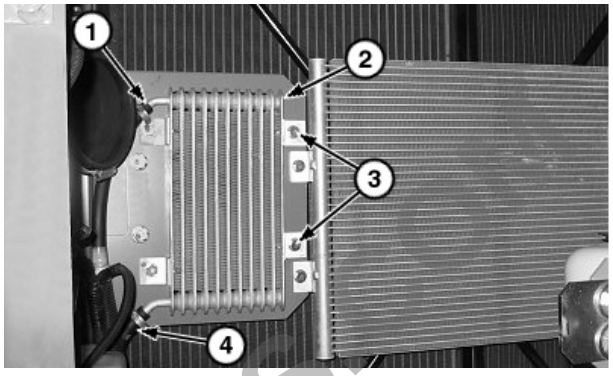

TX1019245A –UN–15FEB07

OUO1073,0002101 –19–13MAR07–1/1

Cooling Package Remove and Install

CAUTION: High pressure release of oil from pressurized system can cause serious burns or penetrating injury. The hydraulic tank is pressurized. Relieve pressure by pushing pressure release button (1).

1. Push pressure release button (1).

1—Pressure Release Button
2—Hydraulic Oil Tank Cover

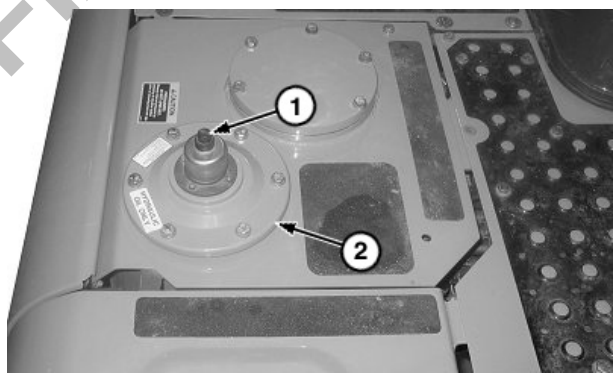

TX1020196A –UN–07MAR07

Continued on next page

LD30992,000059C –19–18APR07–1/16

05
0510
11

PREVIEW - YOUFIXTHIS

Download full manual at youfixthis.com

PREVIEW - YOUFIXTHIS.COM

Download full manual at youfixthis.com

Evacuate R134a System

CAUTION: Liquid refrigerant will freeze eyes or skin on contact. Wear goggles, gloves and protective clothing.

See Refrigerant Cautions and Proper Handling. (Group 1830.)

Do not remove high pressure relief valve. Air conditioning system will discharge rapidly causing possible injury.

1. Connect refrigerant recovery system. See R134a Refrigerant Recovery/Recycling and Charging Station Installation Procedure. (Group 1830.)
2. Open low-side and high-side valves on refrigerant recovery/recycling and charging station.
3. Follow manufacturers' instructions and evacuate system.

NOTE: Vacuum specifications listed are for sea level conditions. Subtract 3.4 kPa (34 mbar) (1 in. Hg) from 98 kPa (980 mbar) (29 in. Hg) for each 300 m (1000 ft) elevation above sea level.

Specification	
Evacuate System—Vacuum	Subtract 3.4 kPa from 98 kPa for each 300 m elevation above sea level Subtract 34 mbar from 980 mbar for each 300 m elevation above seal level Subtract 1 in. Hg from 29 in. Hg for each 1000 ft elevation above sea level

4. Evacuate system until low-side gauge registers 98 kPa (980 mbar) (29 in. Hg) vacuum.

Specification	
Evacuate System—Vacuum	98 kPa 980 kPa 29 in. Hg

If above specification vacuum cannot be obtained in 15 minutes, test the system for leaks. See Refrigerant Leak Test. (Group 9031-25.)

5. When vacuum reaches above specification, close low-side and high-side valves. Turn vacuum pump off.
6. If vacuum decreases more than specification in 5 minutes, there is a leak in system.

Specification	
Evacuate System—Vacuum	3.4 kPa 34 mbar 1 in. Hg

7. Repair leak.
8. Evacuate system for 30 minutes after 98 kPa (980 mbar) (29 in. Hg) vacuum is reached.
9. Close low-side and high-side valves. Stop evacuation.
10. Charge system. See Charge R134a System. (Group 1830.)

OUO1073,00020F8 –19–05MAR07–1/1

18
1830
9

PREVIEW - YOUFIXTHIS.COM

Download full manual at youfixthis.com

Pump 1 and 2 Remove and Install

CAUTION: High pressure release of oil from pressurized system can cause serious burns or penetrating injury. The hydraulic tank is pressurized. Relieve pressure by pushing pressure release button (1).

1. Push pressure release button (1).
2. Drain hydraulic oil tank. Approximate capacity is 120.4 L (31.8 gal).
3. Drain pump drive gearbox. Approximate oil capacity is 0.9 L (1.0 qt).
4. Remove hydraulic compartment cover and muffler cover.

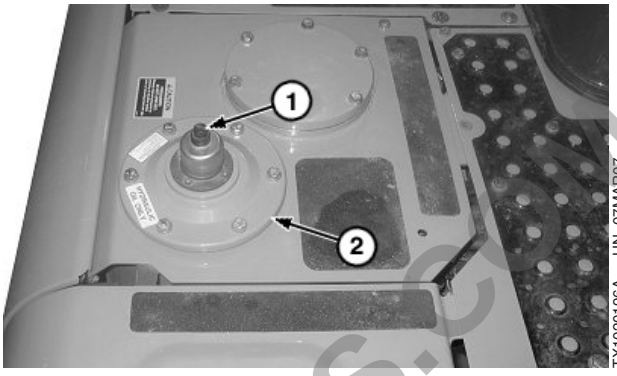

1—Pressure Release Button
2—Hydraulic Oil Tank Cover

FS41334,000014C –19–13APR07–1/13

5. Remove cap screws (1) and set fuel filters (2 and 3) aside. Protect against damage to hoses and filters.

1—Cap Screws (4 used)
2—Final Fuel Filter
3—Primary Fuel Filter

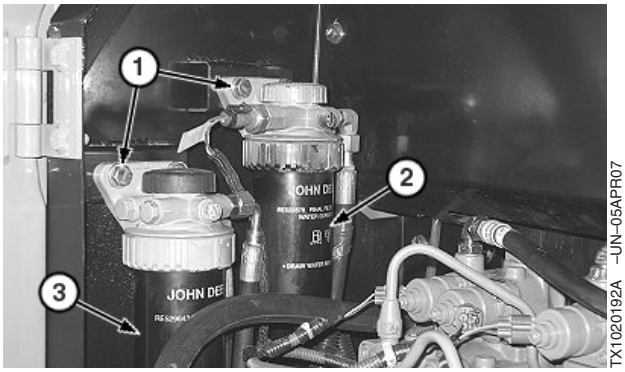

FS41334,000014C –19–13APR07–2/13

33
3360
4

6. Remove cap screws (2) and set engine oil filter assembly (1) aside. Protect against damage to hoses and filter.

1—Oil Filter Assembly
2—Cap Screw (2 used)

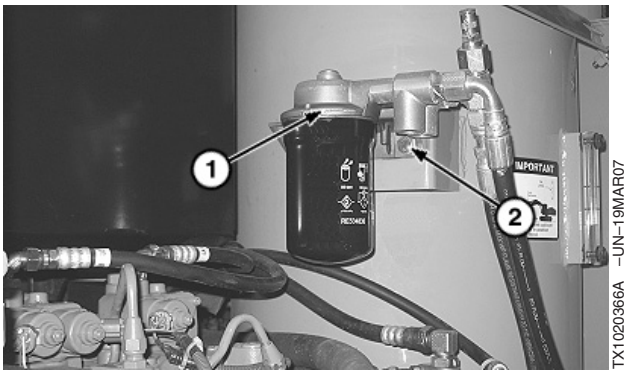

Continued on next page

FS41334,000014C –19–13APR07–3/13

PREVIEW - YOUFIXTHIS.COM
Download full manual at youfixthis.com

Pilot Shutoff Solenoid Valve Disassemble and Assemble

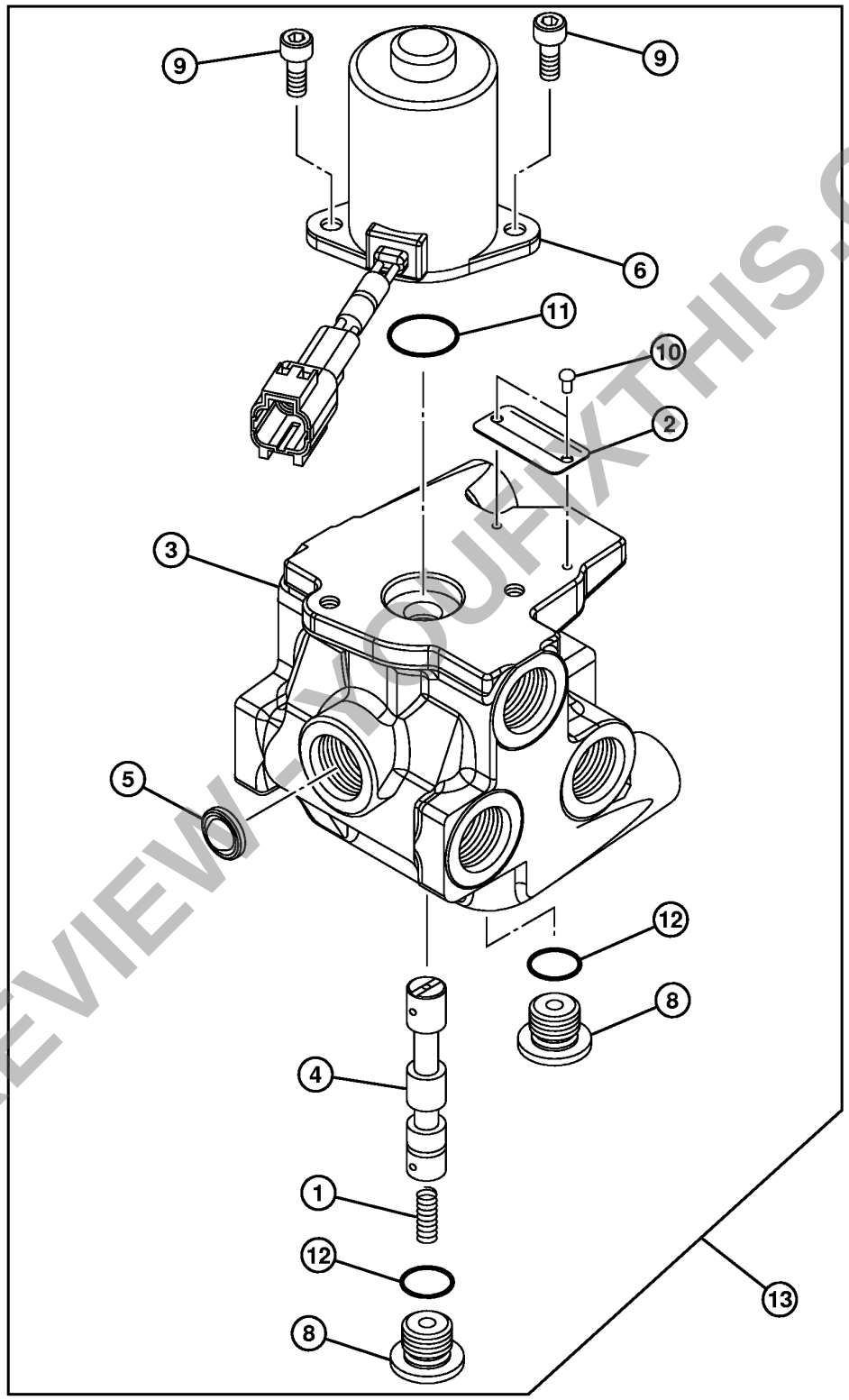

TX1000413

TX1000413 –UN–16NOV05

Continued on next page

TJ15698,0000114 –19–18APR07–1/2

PREVIEW - YOUFIXTHIS.COM

Download full manual at youfixthis.com

Control Valve (4-Spool) Disassemble and Assemble

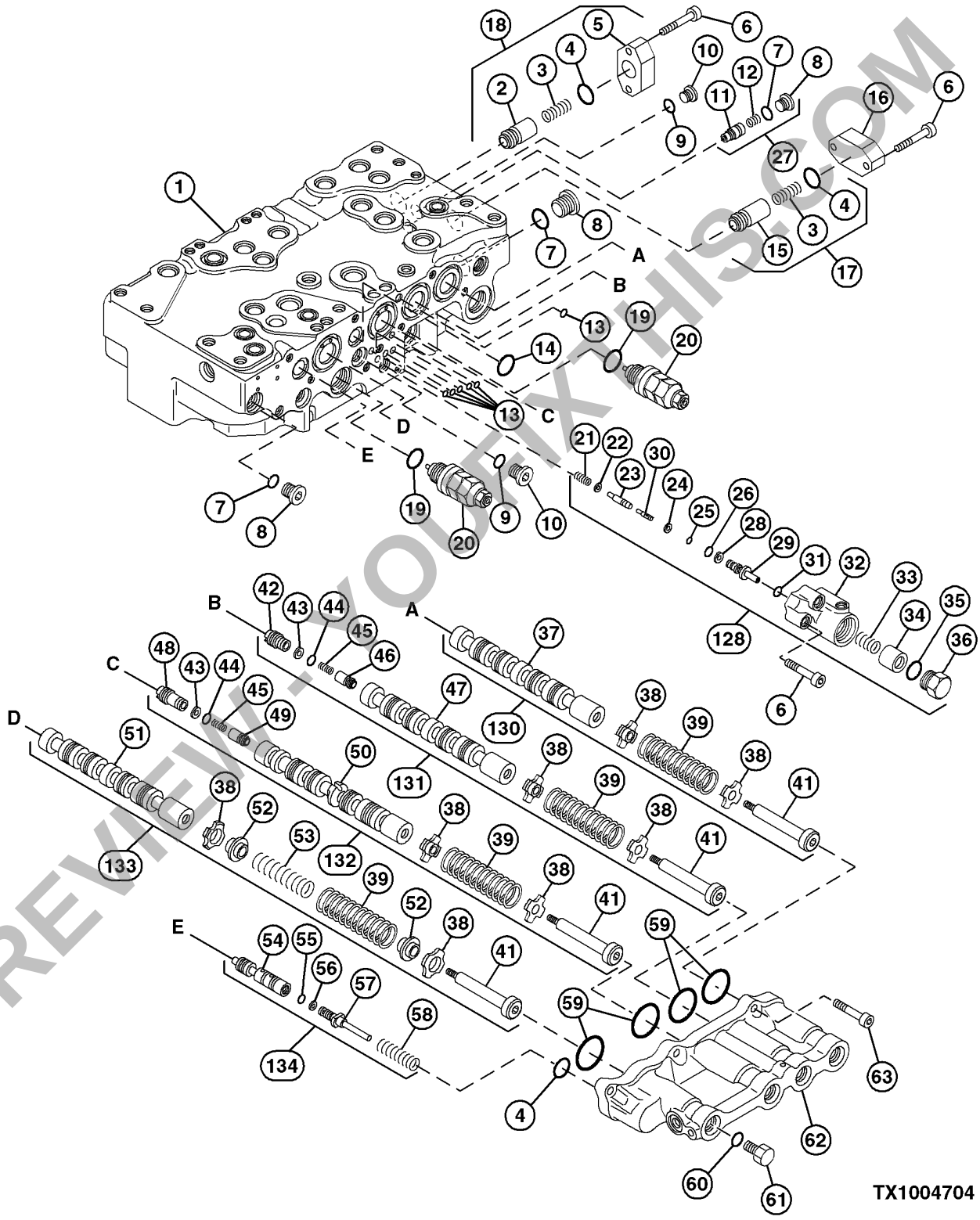

4-Spool Control Valve

Continued on next page

OUO6046,000231F –19–19APR07–1/6

PREVIEW - YOUFIXTHIS.COM
Download full manual at youfixthis.com

9. Remove set screw (18) and steel ball (19).

IMPORTANT: To avoid damaging tapped hole for set screw, cap screw in ST3242 Hex Piston Nut Wrench must be tightened against a side of nut without tapped hole.

To avoid gouging side of nut, install a piece of steel flat stock between nut and cap screw.

10. Install ST3242 Hex Piston Nut Wrench so cap screw is tightened against side of piston nut (20) without tapped hole.
11. Install a piece of steel flat stock between nut and cap screw. Tighten cap screw of piston nut wrench.
12. Remove piston nut (20) using JT30043 Cylinder Service Stand.

Specification	
Bucket Cylinder Piston Nut—Torque	4280 N•m 3157 lb-ft

13. Remove components (13—17) from piston nut (20).
14. Remove cylinder head (7) from rod (1).

IMPORTANT: Note direction of dust wiper (2) and U-ring (4) for installation.

15. Remove components (2—5) and (9—11) from cylinder head (7).
16. Remove bushing (8) using ST8018.
17. Inspect dust seals and bushings in rod (1) and barrel (12) for wear or damage. Repair or replace parts as necessary. See Inspect Pins, Bushings and Bosses—Front Attachment. (Group 3340.)
18. Check for rod curvature on V-blocks using dial indicator.

Specification	
Bucket Cylinder Rod—Curvature	0.5 mm per 1 m 0.020 in. per 3.25 ft

19. Repair or replace parts as necessary.
20. Install bushing (8) into cylinder head (7) using ST8018. Press to bottom of bore.
21. Install snap ring (9).
22. Install backup ring (10) and O-ring (11).
23. Install buffer ring (5).
24. Install U-ring (4) with lip towards bushing (8).
25. Install backup ring (3).
26. Install dust wiper (2) using ST8018 with lip towards outside of cylinder.
27. Install assembled cylinder head (7) on rod (1) using ST8018.
28. Install O-ring (16) and seal ring (17) to piston nut (20) using ST2977 Installer. Adjust seal ring (17) using ST2332 Adjustment Tool.
29. Install backup rings (15) on each side of seal ring.
30. Install slide rings (13) and wear rings (14) to piston nut (20).
31. Align marks made during disassembly and install piston nut (20).

33 3360 ,104

Continued on next page

OUO6046,000232C –19–09APR07–2/3

PREVIEW - YOUFIXTHIS.COM
Download full manual at youfixthis.com

PREVIEW - YOUFIXTHIS.COM

Download full manual at youfixthis.com

PREVIEW ONLY

You're viewing 18 of 406 pages

The full manual includes:

- All 406 pages, complete
- Searchable PDF (find any keyword)
- No watermarks
- Instant download
- Print-ready quality

GET FULL MANUAL NOW

John Deere 160DLC Repair Manual

Scan or click anywhere
youfixthis.com

Click anywhere on this page to get the full manual