200D and 200DLC Excavator Repair

TECHNICAL MANUAL
200D and 200DLC Excavator Repair

TM10079 17MAR09 (ENGLISH)

PREVIEW - YOUFIXTHIS.COM

For complete service information also see:

200D and 200DLC Excavator Operation and Tests	TM10076
200D and 200DLC Excavator Operator's Manual	OMT226908
POWERTECH™ 4.5L/6.8L POWERTECH E™ 6.8L Diesel Engines—Base Engine	CTM104
POWERTECH E™ 6.8L Diesel Engines—Level 16 Electronic Fuel System with Denso HPCR	CTM502
Alternators and Starter Motors	CTM77
Undercarriage Appraisal Manual	SP326
Super Caddy Oil Cleanup Procedure	CTM310

Worldwide Construction And Forestry Division
LITHO IN U.S.A.

Download full manual at youfixthis.com

Contents

SECTION 00—General Information
Group 01—Safety
Group 0003—Torque Values

SECTION 01—Tracks
Group 0130—Track System

SECTION 02—Axles, Differentials and Suspension Systems
Group 0250—Axle Shaft, Bearings, and Reduction Gears
Group 0260—Hydraulic System

SECTION 04—Engine
Group 0400—Removal and Installation

SECTION 05—Engine Auxiliary System
Group 0510—Cooling System
Group 0520—Intake System
Group 0560—External Fuel Supply System

SECTION 07—Dampener Drive (Flex Coupling)
Group 0752—Elements

SECTION 17—Frame or Supporting Structure
Group 1740—Frame Installation
Group 1749—Chassis Weights

SECTION 18—Operator's Station
Group 1800—Removal and Installation
Group 1810—Operator Enclosure
Group 1821—Seat and Seat Belt
Group 1830—Heating and Air Conditioning

SECTION 33—Excavator
Group 3302—Buckets
Group 3340—Frames
Group 3360—Hydraulic System

SECTION 43—Swing or Pivoting System
Group 4350—Mechanical Drive Elements
Group 4360—Hydraulic System

SECTION 99—Dealer Fabricated Tools
Group 9900—Dealer Fabricated Tools

All information, illustrations and specifications in this manual are based on the latest information available at the time of publication. The right is reserved to make changes at any time without notice.

COPYRIGHT © 2009
DEERE & COMPANY
Moline, Illinois
All rights reserved
A John Deere ILLUSTRUCTION® Manual
Previous Editions
Copyright © 2007, 2008

PREVIEW - YOUFIXTHIS.COM

Download full manual at youfixthis.com

Recognize Safety Information

This is the safety alert symbol. When this symbol is noticed on the machine or in this manual, be alert for the potential of personal injury.

Follow the precautions and safe operating practices highlighted by this symbol.

A signal word — DANGER, WARNING, or CAUTION — is used with the safety alert symbol. DANGER identifies the most serious hazards.

On the machine, DANGER signs are red in color, WARNING signs are orange, and CAUTION signs are yellow. DANGER and WARNING signs are located near specific hazards. General precautions are on CAUTION labels.



T133555 –UN–28AUG00

T133588 –19–28AUG00

TX03679,00016CC –19–03JAN07–1/1

Follow Safety Instructions

Read the safety messages in this manual and on the machine. Follow these warnings and instructions carefully. Review them frequently.

Be sure all operators of this machine understand every safety message. Replace operator's manual and safety labels immediately if missing or damaged.

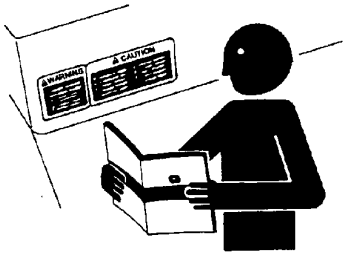

T133556 –UN–24AUG00

TX03679,00016F9 –19–03JAN07–1/1

Operate Only If Qualified

Do not operate this machine unless the operator's manual has been read carefully, and you have been qualified by supervised training and instruction.

Operator should be familiar with the job site and surroundings before operating. Try all controls and machine functions with the machine in an open area before starting to work.

Know and observe all safety rules that may apply to every work situation and work site.

TX03679,00016FA –19–03JAN07–1/1

PREVIEW - YOUFIXTHIS.COM
Download full manual at youfixthis.com

Metric Bolt and Cap Screw Torque Values

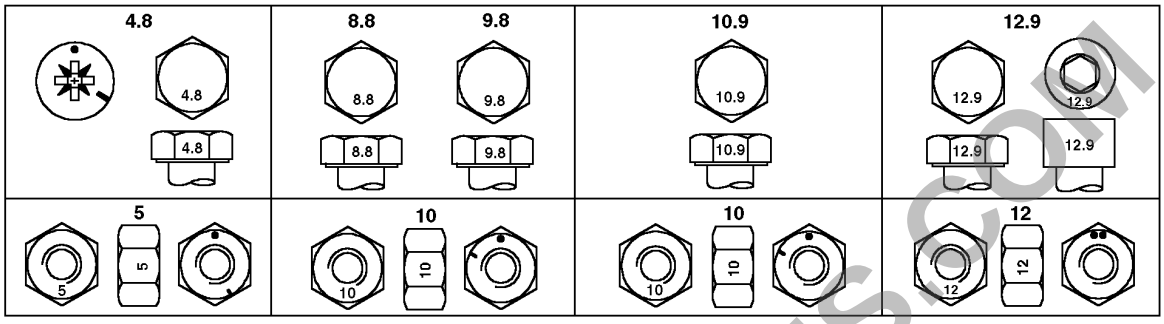

TORQ2 –UN–07SEP99

Top—Property Class and Head Markings; Bottom—Property Class and Nut Markings

METRIC BOLT AND CAP SCREW TORQUE VALUES—Tolerance is ±10% unless otherwise specified

	Class 4.8		Class 8.8 or 9.8		Class 10.9		Class 12.9	
Thread Size	Lubricated[a] N•m (lb-ft)	Dry[b] N•m (lb-ft)	Lubricated[a] N•m (lb-ft)	Dry[b] N•m (lb-ft)	Lubricated[a] N•m (lb-ft)	Dry[b] N•m (lb-ft)	Lubricated[a] N•m (lb-ft)	Dry[b] N•m (lb-ft)
M6	4.7 (3.5)	6 (4.4)	9 (6.6)	11.5 (8.5)	13 (9.5)	16.5 (12.2)	15.5 (11.5)	19.5 (14.5)
M8	11.5 (8.5)	14.5 (10.7)	22 (16)	28 (20.5)	32 (23.5)	40 (29.5)	37 (27.5)	47 (35)
M10	23 (17)	29 (21)	43 (32)	55 (40)	63 (46)	80 (59)	75 (55)	95 (70)
M12	40 (29.5)	50 (37)	75 (55)	95 (70)	110 (80)	140 (105)	130 (95)	165 (120)
M14	63 (46)	80 (59)	120 (88)	150 (110)	175 (130)	220 (165)	205 (150)	260 (190)
M16	100 (74)	125 (92)	190 (140)	240 (175)	275 (200)	350 (255)	320 (235)	400 (300)
M18	135 (100)	170 (125)	265 (195)	330 (245)	375 (275)	475 (350)	440 (325)	560 (410)
M20	190 (140)	245 (180)	375 (275)	475 (350)	530 (390)	675 (500)	625 (460)	790 (580)
M22	265 (195)	330 (245)	510 (375)	650 (480)	725 (535)	920 (680)	850 (625)	1080 (800)
M24	330 (245)	425 (315)	650 (480)	820 (600)	920 (680)	1150 (850)	1080 (800)	1350 (1000)
M27	490 (360)	625 (460)	950 (700)	1200 (885)	1350 (1000)	1700 (1250)	1580 (1160)	2000 (1475)
M30	660 (490)	850 (625)	1290 (950)	1630 (1200)	1850 (1350)	2300 (1700)	2140 (1580)	2700 (2000)
M33	900 (665)	1150 (850)	1750 (1300)	2200 (1625)	2500 (1850)	3150 (2325)	2900 (2150)	3700 (2730)
M36	1150 (850)	1450 (1075)	2250 (1650)	2850 (2100)	3200 (2350)	4050 (3000)	3750 (2770)	4750 (3500)

[a] *"Lubricated" means coated with a lubricant such as engine oil, or fasteners with phosphate and oil coatings.*

[b] *"Dry" means plain or zinc plated without any lubrication.*

CAUTION: Use only metric tools on metric hardware. Other tools may not fit properly. Tool may slip and cause injury.

DO NOT use these values if a different torque value or tightening procedure is given for a specific application. Torque values listed are for general use only. Check tightness of fasteners periodically.

Shear bolts are designed to fail under predetermined loads. Always replace shear bolts with identical property class.

Fasteners should be replaced with the same or higher property class. If higher property class fasteners are used, these should only be tightened to the strength of the original.

Make sure fastener threads are clean and that you properly start thread engagement. This will prevent them from failing when tightening.

Tighten plastic insert or crimped steel-type lock nuts to approximately 50 percent of the dry torque shown in the chart, applied to the nut, not to the bolt head. Tighten toothed or serrated-type lock nuts to the full torque value.

OUT3035,TORQUE2 –19–22MAR06–1/1

PREVIEW - YOUFIXTHIS.COM
Download full manual at youfixthis.com

Travel Gearbox Disassemble and Assemble

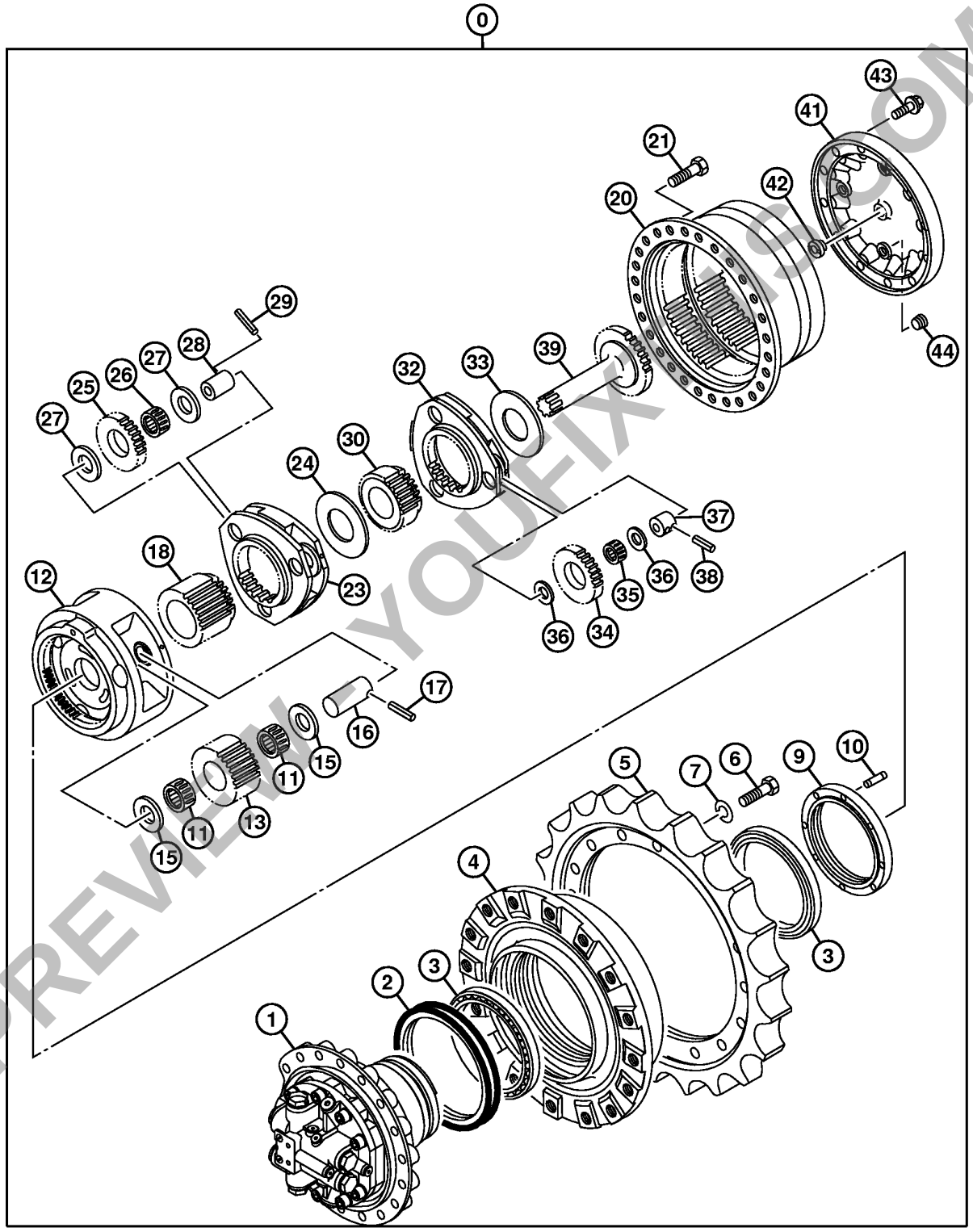

TX1000629

TX1000629 –UN–28NOV05

Continued on next page

OUO6046,0002312 –19–19APR07–1/7

PREVIEW ONLY YOUFIXTHIS.COM
Download full manual at youfixthis.com

Track Roller Remove and Install

1. Swing upperstructure 90° and lower bucket to raise track off ground. Keep angle between boom and arm 90—110° and position round side of bucket on ground.

CAUTION: Prevent possible injury from unexpected machine movement. Position shop stands under frame to support machine while removing lower track roller.

2. Put shop stands under machine.

Specification	
200D Excavator—Weight (approximate)	22 000 kg 49 000 lb

Specification	
200DLC Excavator—Weight (approximate)	23 000 kg 50 000 lb

OUO6046,0002302 –19–27JUN08–1/3

CAUTION: Prevent possible injury from high pressure grease. Do not remove grease fitting (A) from valve (B).

3. Loosen valve (B) one to two turns to release grease through bleed hole (C).

A—Grease Fitting
B—Valve
C—Bleed Hole

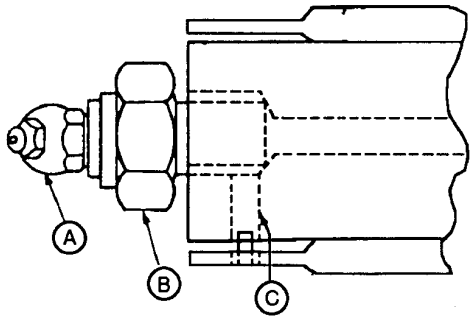

T7396DZ –UN–28NOV90

Continued on next page

OUO6046,0002302 –19–27JUN08–2/3

PREVIEW - YOUFIXTHIS.COM

Download full manual at youfixthis.com

Introduction

Foreword

This manual is written for an experienced technician. Essential tools required in performing certain service work are identified in this manual and are recommended for use.

Live with safety: Read the safety messages in the introduction of this manual and the cautions presented throughout the text of the manual.

This is the safety-alert symbol. When you see this symbol on the machine or in this manual, be alert to the potential for personal injury.

Technical manuals are divided in two parts: repair and operation and tests. Repair sections tell how to repair the components. Operation and tests sections help you identify the majority of routine failures quickly.

Information is organized in groups for the various components requiring service instruction. At the beginning of each group are summary listings of all applicable essential tools, service equipment and tools, other materials needed to do the job, service parts kits, specifications, wear tolerances, and torque values.

Technical Manuals are concise guides for specific machines. They are on-the-job guides containing only the vital information needed for diagnosis, analysis, testing, and repair.

Fundamental service information is available from other sources covering basic theory of operation, fundamentals of troubleshooting, general maintenance, and basic type of failures and their causes.

DX,TMIFC –19–29SEP98–1/1

PREVIEW - YOUFIXTHIS.COM

Download full manual at youfixthis.com

PREVIEW - YOUFIXTHIS.COM

Download full manual at youfixthis.com

00
0003
16

O-Ring Face Seal Fittings With Metric Hex Nut And Stud End For High Pressure Service Recommendations

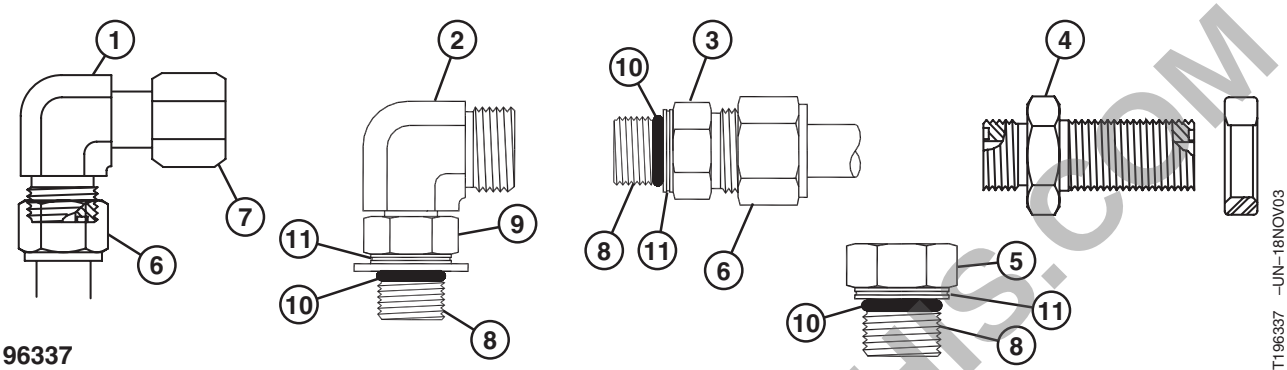

T196337

1—90° Swivel Elbow
2—90° Adjustable Stud Elbow
3—Stud Straight
4—Bulkhead Union and Nut
5—External Hex Stud End Plug
6—Tube Nut
7—Swivel Nut
8—Stud End
9—Hex Nut
10—O-Ring
11—Identification Groove

O-RING FACE SEAL FITTINGS WITH METRIC HEX NUT AND STUD END FOR HIGH PRESSURE, ABOVE 27 600 kPa (275.8 bar) (4,000 psi), TORQUE VALUES—Tolerance is +15 -20% unless otherwise specified

Nominal Tube OD or Hose ID			O-Ring Face Seal Hose or Tube Swivel Nut			Bulkhead Nut	
Metric Tube OD	Inch Tube OD or Hose ID		Thread Size	Hex Size	Torque	Hex Size	Torque
mm	Dash Size	mm (in.)	in.	mm	Nm (lb-ft)	mm	Nm (lb-ft)
4	-2	3.18 (0.125)	—	—	—	—	—
5	-3	4.78 (0.188)	—	—	—	—	—
6	-4	6.35 (0.250)	9/16-18	17	24 (18)	22	32 (24)
8	-5	7.92 (0.312)	—	—	—	—	—
10	-6	9.53 (0.375)	11/16-16	22	37 (27)	27	42 (31)
12	-8	12.70 (0.500)	13/16-16	24	75 (55)	30	93 (69)
16	-10	15.88 (0.625)	1-14	30	103 (76)	36	118 (87)
20	-12	19.05 (0.750)	1-3/16-12	36	152 (112)	41	175 (129)
22	-14	22.23 (0.875)	1-3/16-12	36	152 (112)	41	175 (129)
25	-16	25.40 (1.000)	1-7/16-12	41	214 (158)	46	247 (182)
28	—	—	—	—	—	—	—
32	-20	31.75 (1.250)	1-11/16-12	—	286 (211)	50	328 (242)
38	-24	38.10 (1.500)	2-12	—	326 (240)	60	374 (276)

Continued on next page

OUT3035,0000421 –19–14JAN04–1/2

PREVIEW - YOUFIXTHIS.COM

Download full manual at youfixthis.com

Track Adjuster Cylinder Disassemble and Assemble

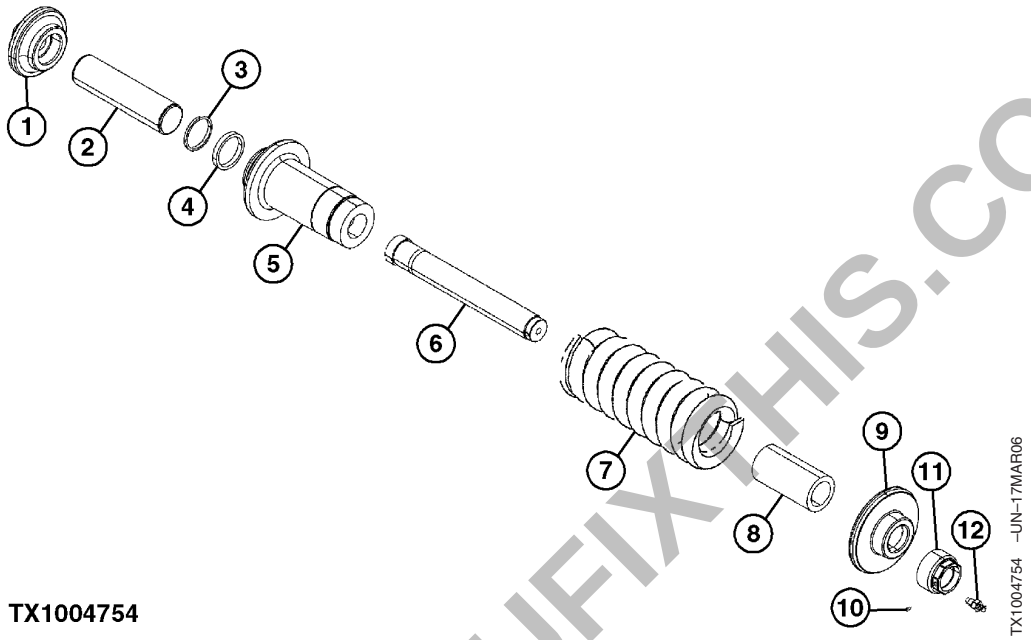

TX1004754

1—Holder	4—U-Ring	7—Spring	10—Plug
2—Piston Rod	5—Cylinder	8—Spacer	11—Nut
3—Dust Seal	6—Rod	9—Washer	12—Grease Valve

CAUTION: Spring or rod may break if dropped while handling, transporting or disassembling. Nicks or weld craters in spring and rod assembly can cause stress concentration resulting in a weak spot. Weak spots can result in immediate or eventual failure of spring or rod creating a risk of personal injury. Put a heavy protective covering around spring assembly when handling, transporting, or disassembling.

A compression tool must be used for disassembly and assembly because of the extreme preload on spring.

NOTE: It is not necessary to remove the recoil spring to replace dust seal (3) and U-ring packing (4). It is necessary to remove the recoil spring to replace rod (6).

1. Remove piston rod (2) from cylinder (5).
2. Remove holder (1) from piston rod (2) using a press.

IMPORTANT: Do not damage dust seal (3) and U-ring (4).

3. Remove dust seal (3) and U-ring (4) from cylinder (5).
4. Remove recoil spring if necessary. See Track Adjuster and Recoil Spring Remove and Install. (Group 0130.)
5. Remove rod (6) from cylinder (5).
6. Repair or replace parts as necessary.
7. Install rod (6) into cylinder (5).

Continued on next page

PREVIEW - YOUFIXTHIS.COM
Download full manual at youfixthis.com

Section 04
Engine

Contents

Page

Group 0400—Removal and Installation
Engine Remove and Install 04-0400-1

PREVIEW - YOUFIXTHIS.COM

Download full manual at youfixthis.com

24. Install hood.
25. Fill cooling system. See Cooling System Fill and Deaeration Procedure. (Operator's Manual.)
26. Check hydraulic oil level. Fill as necessary. See 200DLC Drain and Refill Capacities. (Operator's Manual.)

OUO1073,0002118 –19–18APR07–9/9

Coolant Surge Tank Remove and Install

CAUTION: Prevent possible injury from hot spraying water. DO NOT remove surge tank cap unless engine is cool. Then remove cap slowly.

1. Remove surge tank filler cap to relieve pressure.



TS281 –UN–23AUG88

OUO1073,0002119 –19–18APR07–1/2

2. Drain coolant until level is below surge tank.
3. Loosen hose clamps and disconnect hoses (1, 2, and 5).
4. Remove cap screws (3) and coolant surge tank (4).
5. Remove coolant surge tank. Replace as necessary.
6. Install coolant surge tank and cap screws.
7. Connect hoses and tighten clamps.
8. Fill cooling system. See Cooling System Fill and Deaeration Procedure. (Operator's Manual.)

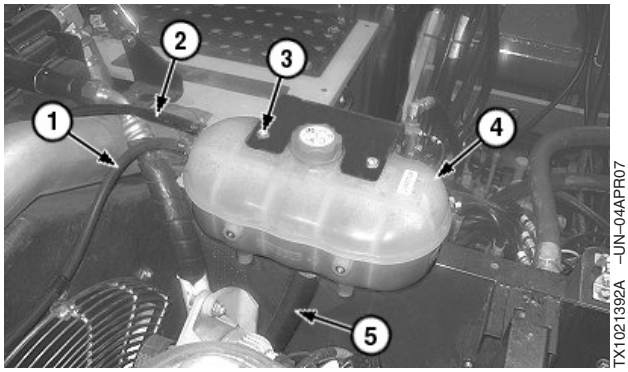

TX1021392A –UN–04APR07

1—Hose
2—Hose
3—Cap Screw (4 used)
4—Coolant Surge Tank
5—Hose

OUO1073,0002119 –19–18APR07–2/2

PREVIEW - YOUFIXTHIS.COM

Download full manual at youfixthis.com

PREVIEW - YOUFIXTHIS.COM

Download full manual at youfixthis.com

CAUTION: Heavy component; use appropriate lifting device. Weight of boom, arm and bucket assembly and components will vary depending on machine configuration.

Specification	
Boom, Arm and Bucket Assembly—Approximate Weight	3450 kg (7610 lb)
Bucket Cylinder—Weight	150 kg (330 lb)
Arm Cylinder—Weight	250 kg (550 lb)

8. Attach appropriate lifting device to arm.



T6626JC –UN–31OCT88

Arm With Bucket Cylinder

TJ15698,0000158 –19–11APR07–4/7

9. Put wooden block between arm cylinder (5) and boom to hold cylinder up when cylinder pin (2) is removed.

10. Remove nuts (1), cap screw (3) and pin (2).

1—Nut (2 used)
2—Pin
3—Cap Screw
4—Arm
5—Arm Cylinder

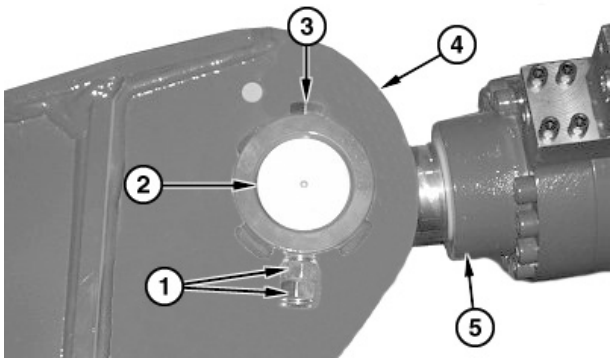

TX1003794A –UN–19APR06

Continued on next page

TJ15698,0000158 –19–11APR07–5/7

PREVIEW - YOUFIXTHIS.COM
Download full manual at youfixthis.com

5. Remove cap screws (1) and regulator (2).

6. Repair or replace parts as necessary.

7. Install regulators making sure groove in remote control sleeve and load sleeve engage dowel pin in feedback link. Check through hole that groove in sleeves engage dowel pin.

8. Tighten cap screws (1) to specification.

Specification

Pump 1 (Front) and Pump 2 (Rear) Regulator-to-Pump Housing Cap Screw—Torque..... 49 N•m 36 lb-ft

9. Connect lines. See Pump 1, Pump 2, and Pilot Pump Line Identification. (Group 9025-15.)

10. Connect electrical connectors. See Pump Harness (W8) Component Location. (Group 9015-10.)

IMPORTANT: Hydraulic pump will be damaged if not filled with oil before starting engine. Procedure must be performed whenever a new pump installed or oil has been drained from the pump or hydraulic oil tank.

11. Fill pump housing with oil. See Pump 1 and 2 Start-Up Procedure. (Group 3360.)

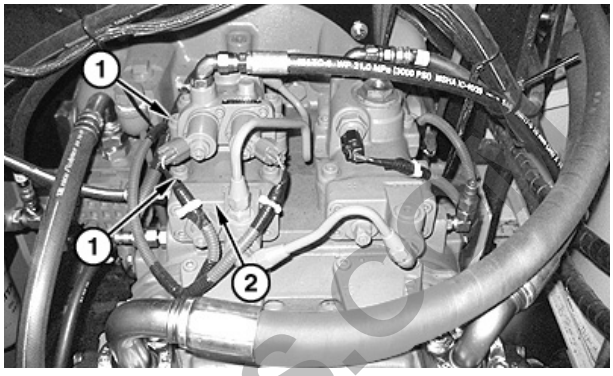

TX1003224A –UN–06FEB06

1—Cap Screw (8 used)
2—Hydraulic Pump Regulator (2 used)

FS41334,000016B –19–10APR07–2/2

PREVIEW - YOUFIXTHIS.COM

Download full manual at youfixthis.com

Control Valve Remove and Install

CAUTION: High pressure release of oil from pressurized system can cause serious burns or penetrating injury. Relieve pressure by pushing pressure release button (1).

1. Push pressure release button (1).
2. Pull a vacuum in hydraulic oil tank using a vacuum pump, or drain tank. See Apply Vacuum to Hydraulic Oil Tank. (Group 3360.) See 200DLC Drain and Refill Capacities. (Operator's Manual.)

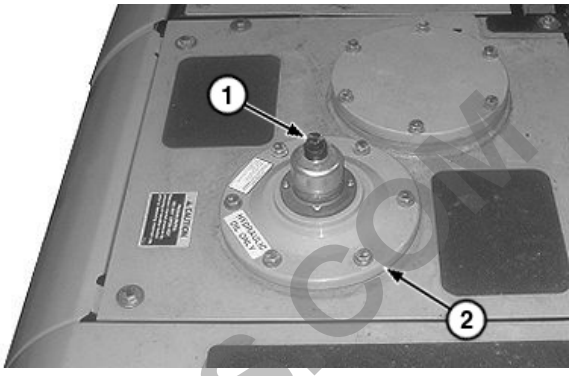

1—Pressure Release Button
2—Hydraulic Oil Tank Cover

OUO6046,0002313 –19–10APR07–1/3

3. Tag and disconnect hydraulic lines and hoses. Close all open lines and fittings using caps and plugs.
4. Disconnect electrical connectors.
5. Remove cap screws (1) and washers. Place pilot signal manifold (2) with bracket to side.
6. Attach an appropriate lifting device to control valve using lifting straps.

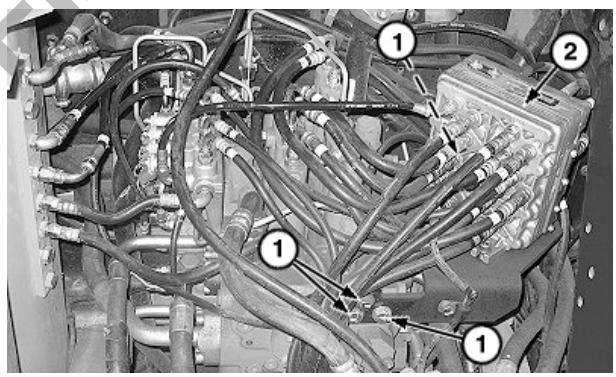

1—Cap Screws
2—Pilot Signal Manifold

Continued on next page

OUO6046,0002313 –19–10APR07–2/3

PREVIEW - YOUFIXTHIS.COM

Download full manual at youfixthis.com

29. Install assembled cylinder head (7) on rod (1) using ST8021.

30. Install O-ring (20) and seal ring (21) to piston nut (24) using ST2978 Installer. Adjust seal ring (21) using ST2535 Adjustment Tool.

31. Install backup rings (19) on each side of seal ring.

32. Install slide rings (17) and wear rings (18) to piston nut (24).

IMPORTANT: Install cushion seal (26) so that notch is towards piston.

33. Install cushion seal (26).

IMPORTANT: Note direction of oil groove in cushion bearing (25) during installation.

34. Install cushion bearing (25).

35. Align marks made during disassembly and install piston nut (24).

IMPORTANT: To avoid damaging tapped hole for set screw, cap screw in ST3249 Hex Piston Nut Wrench must be tightened against a side of nut without tapped hole.

To avoid gouging side of nut, install a piece of steel flat stock between nut and cap screw.

36. Install ST3249 Hex Piston Nut Wrench so cap screw is tightened against side of piston nut (24) without tapped hole. Install a piece of steel flat stock between nut and cap screw. Tighten cap screw of piston nut wrench. Tighten piston nut (24) to specification using JT30043 Cylinder Service Stand.

Specification

Arm Cylinder Piston Nut—Torque ..... 8860 N•m (6535 lb-ft)

37. Install steel ball (23) and set screw (22). Tighten set screw to specification.

Specification

Set Screw—Torque ..... 57 N•m (42 lb-ft)

38. Stake set screw (22) in two places 90° from previous stake marks.

IMPORTANT: Install cushion seal (15) so that notch is towards piston.

39. Install snap ring (16) and cushion seal (15).

IMPORTANT: Note direction of oil groove in cushion bearing (14) during installation.

40. Install cushion bearing (14) and stopper (13).

41. Apply clean oil to piston nut and seals. Attach appropriate lifting device to rod using a lifting strap. Carefully install piston nut, rod and cylinder head into barrel.

42. Install cylinder head cap screws (6). Tighten to specification.

Specification

Arm Cylinder Head-to-Barrel Cap Screw—Torque ..... 367 N•m (270 lb-ft)

33 3360 ,100

OUO6046,000232E –19–13MAR09–3/3

PREVIEW - YOUFIXTHIS.COM

Download full manual at youfixthis.com

Swing Motor and Park Brake Remove and Install

CAUTION: High pressure release of oil from pressurized system can cause serious burns or penetrating injury. The hydraulic tank is pressurized. Relieve pressure by pushing pressure release button (1).

1. Push pressure release button (1).
2. Apply vacuum to hydraulic tank or drain hydraulic tank. See Apply Vacuum to Hydraulic Tank. (Group 3360). The approximate capacity of hydraulic oil tank is 135 L (36 gal).

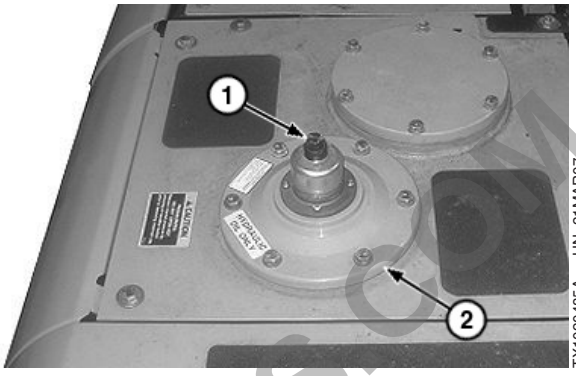

1—Pressure Release Button
2—Hydraulic Oil Tank Cover

Continued on next page
TJ15698,0000172 –19–11APR07–1/3

PREVIEW - YOUFIXTHIS.COM

Download full manual at youfixthis.com

PREVIEW ONLY

You're viewing 18 of 408 pages

The full manual includes:

- All 408 pages, complete
- Searchable PDF (find any keyword)
- No watermarks
- Instant download
- Print-ready quality

GET FULL MANUAL NOW

John Deere 200D, 200DLC Repair Manual

Scan or click anywhere
youfixthis.com

Click anywhere on this page to get the full manual