Electrical Schematic 2032R

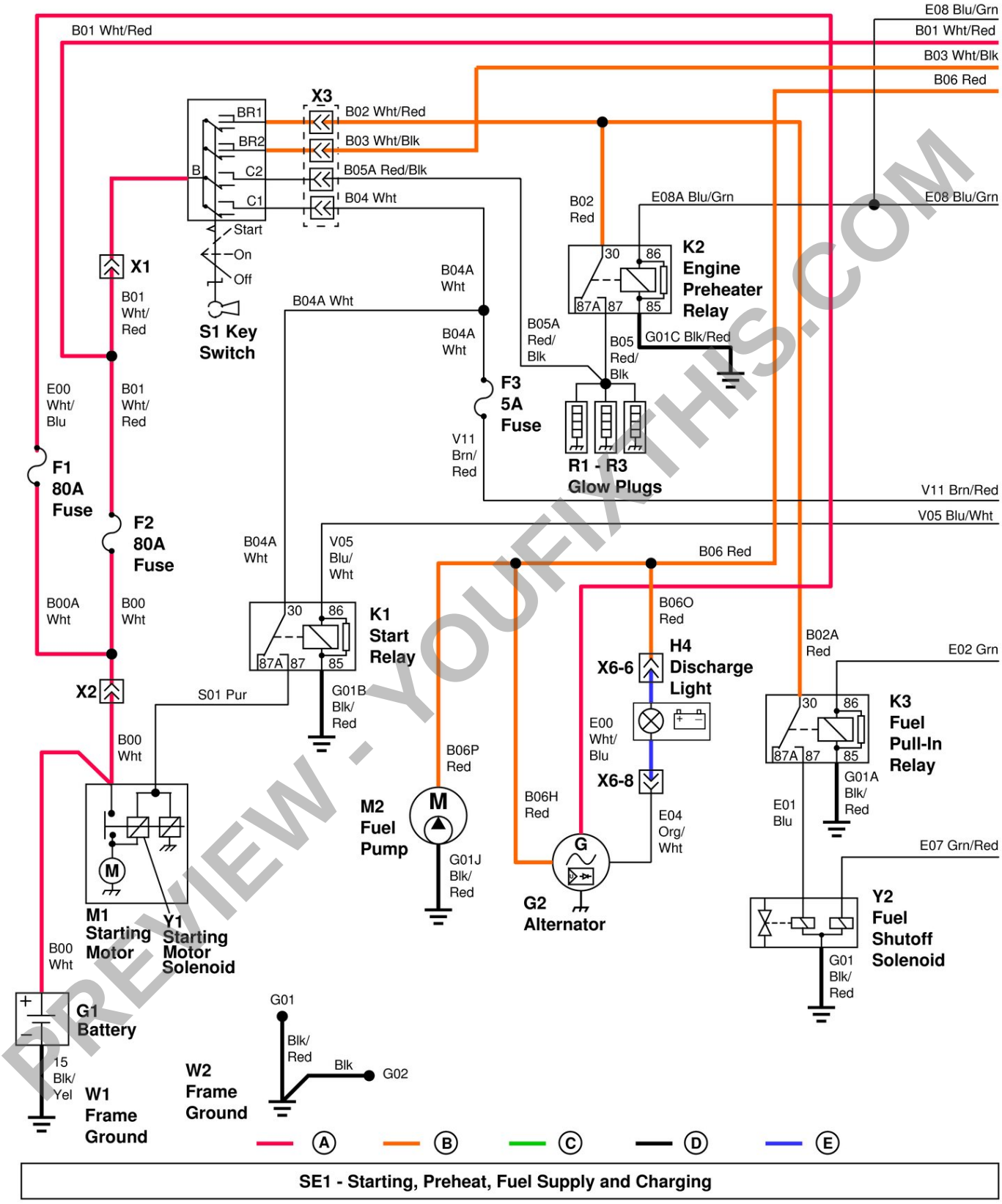

Electrical Schematic (1 of 6)

LEGEND:

A	Power Circuit (Unswitched)
B	Power Circuit (Switched)

Download full manual at youfixthis.com

Charge Pump and Hydrostatic Pump Components

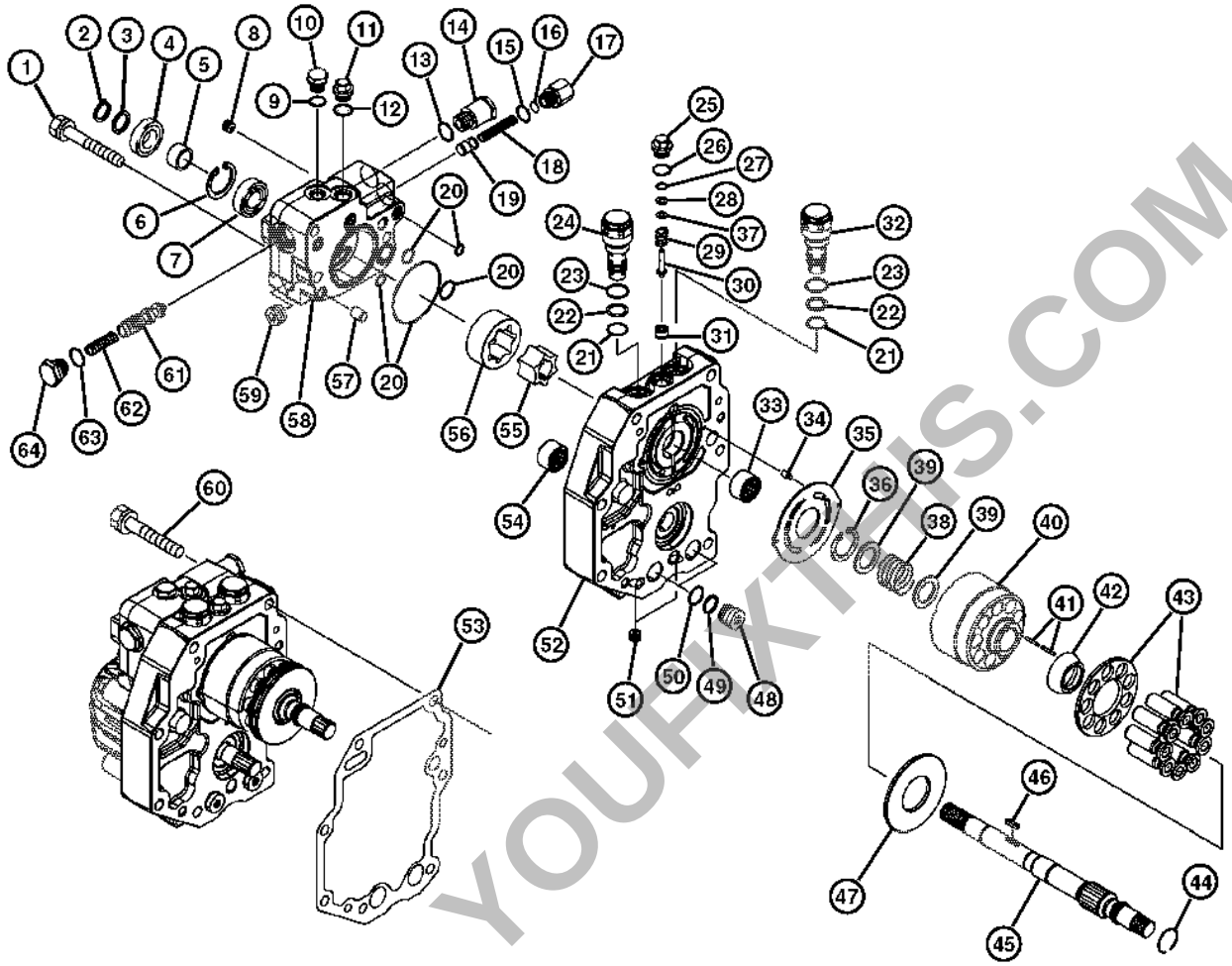

Charge Pump and Hydrostatic Pump Components

LEGEND:

1 Bolt (2 used)
2 Snap Ring
3 Spacer
4 Seal
5 Sleeve
6 Snap Ring
7 Bearing
8 Plug
9 O-Ring
10 Plug
11 Plug
12 O-Ring
13 O-Ring
14 Adaptor
15 O-Ring
16 Shim
17 Cap

PREVIEW - YOUFIXTHIS.COM

Download full manual at youfixthis.com

Group 05 - General Specifications

Metric Bolt and Screw Torque Values

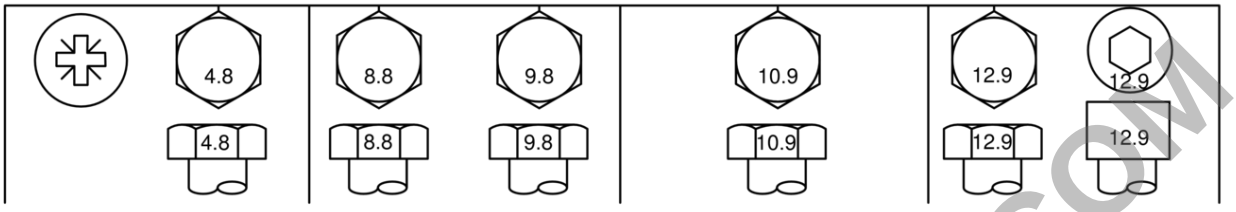

Metric Bolt and Screw

Metric Torque Values

Bolt or Screw Size	Class 4.8				Class 8.8 or 9.8				Class 10.9				Class 12.9			
	Lubricated ["Lubricated" means coated with a lubricant such as engine oil, fasteners with phosphate and oil coatings, or M20 and larger fasteners with JDM F13C, F13F or F13J zinc flake coating.]		Dry ["Dry" means plain or zinc plated without any lubrication, or M6 to M18 fasteners with JDM F13B, F13E or F13H zinc flake coating.]		Lubricated ["Lubricated" means coated with a lubricant such as engine oil, fasteners with phosphate and oil coatings, or M20 and larger fasteners with JDM F13C, F13F or F13J zinc flake coating.]		Dry ["Dry" means plain or zinc plated without any lubrication, or M6 to M18 fasteners with JDM F13B, F13E or F13H zinc flake coating.]		Lubricated ["Lubricated" means coated with a lubricant such as engine oil, fasteners with phosphate and oil coatings, or M20 and larger fasteners with JDM F13C, F13F or F13J zinc flake coating.]		Dry ["Dry" means plain or zinc plated without any lubrication, or M6 to M18 fasteners with JDM F13B, F13E or F13H zinc flake coating.]		Lubricated ["Lubricated" means coated with a lubricant such as engine oil, fasteners with phosphate and oil coatings, or M20 and larger fasteners with JDM F13C, F13F or F13J zinc flake coating.]		Dry ["Dry" means plain or zinc plated without any lubrication, or M6 to M18 fasteners with JDM F13B, F13E or F13H zinc flake coating.]	
	N˙m	**lb.-in.**	**N˙m**	**lb.-in.**	**N˙m**	**lb.-in.**	**N˙m**	**lb.-in.**	**N˙m**	**lb.-in.**	**N˙m**	**lb.-in.**	**N˙m**	**lb.-in.**	**N˙m**	**lb.-in.**
M6	4.7	42	6	53	8.9	79	11.3	100	13	115	16.5	146	15.5	137	19.5	172
									N˙m	**lb.-ft.**	**N˙m**	**lb.-ft.**	**N˙m**	**lb.-ft.**	**N˙m**	**lb.-ft.**
M8	11.5	102	14.5	128	22	194	27.5	243	32	23.5	40	29.5	37	27.5	47	35
			N˙m	**lb.-ft.**	**N˙m**	**lb.-ft.**	**N˙m**	**lb.-ft.**								
M10	23	204	29	21	43	32	55	40	63	46	80	59	75	55	95	70
	N˙m	**lb.-ft.**														
M12	40	29.5	50	37	75	55	95	70	110	80	140	105	130	95	165	120
M14	63	46	80	59	120	88	150	110	175	130	220	165	205	150	260	190
M16	100	74	125	92	190	140	240	175	275	200	350	255	320	235	400	300
M18	135	100	170	125	265	195	330	245	375	275	475	350	440	325	560	410
M20	190	140	245	180	375	275	475	350	530	390	675	500	625	460	790	580
M22	265	195	330	245	510	375	650	480	725	535	920	680	850	625	1080	800
M24	330	245	425	315	650	480	820	600	920	680	1150	850	1080	800	1350	1000
M27	490	360	625	460	950	700	1200	885	1350	1000	1700	1250	1580	1160	2000	1475
M30	660	490	850	625	1290	950	1630	1200	1850	1350	2300	1700	2140	1580	2700	2000
M33	900	665	1150	850	1750	1300	2200	1625	2500	1850	3150	2325	2900	2150	3700	2730
M36	1150	850	1450	1075	2250	1650	2850	2100	3200	2350	4050	3000	3750	2770	4750	3500

PREVIEW - YOUFIXTHIS.COM

Download full manual at youfixthis.com

Group 25 - Tests and Adjustments

Fan and Alternator Drive Belt Adjustment

Reason:

To keep correct tension on the drive belt to the water pump and alternator. To prevent shortened belt and bearing life.

Equipment:

- JDG529 or JDST28 Belt Tension Gauge
- Straight Edge

Procedure:

[1] - Park machine safely. (See Park Machine Safely in Section 10, Group 05.)

[2] - Allow engine to cool.

[3] - Raise hood.

[4] -

PREVIEW - YOUFIXTHIS.COM

Download full manual at youfixthis.com

Engine Oil Diagnostics

Symptom	Problem	Solution
Crankcase Contamination	Fuel in crankcase.	Broken or seized piston ring - replace rings and check cylinder.
		Seized intake and exhaust valve - replace valve and check valve guide.
		Piston ring, piston or cylinder worn - bore or hone cylinder and replace piston.
	Water in crankcase.	Leaking cylinder head gasket - replace head gasket.
		Cracked water jacket - repair or replace water jacket.

Symptom	Problem	Solution
Low Oil Pressure	Oil level low.	Add oil.
	Oil filter clogged.	Replace Oil Filter.
	Incorrect viscosity	Check oil for too low viscosity, or coolant-or-fuel-diluted engine oil.
		Change engine oil.
	External oil leaks	Repair as necessary
	Oil pressure relief valve worn.	Clean, adjust, or replace relief valve.
	Oil pump defective.	Remove and inspect oil pump. (See Oil Pump in Section 30, Group 30.)
	Coolant in oil.	(See Coolant in Oil or Oil in Coolant in Section 30, Group 20.)
	Fuel in oil.	Broken or seized piston ring. Replace rings and check cylinder.
		Seized intake or exhaust valve. Check valve guides and stems.
		Piston ring, piston, or cylinder worn. Bore or hone cylinder and replace piston.
	Oil pump screen clogged or pick-up tube cracked.	Remove oil pan and clean screen. Replace pick-up tube. (See Oil Pan and Strainer in Section 30, Group 30.)
	Intake and Exhaust valves worn.	Check valve guides and stems.
	Crankshaft pin or bearing worn.	Regrind crank and replace bearings.
	Connecting rod bolt loose.	Check for damage and re-torque bolts.
	Excessive volume of fuel injected.	Check fuel injection pump and injectors.
	Broken or seized piston ring.	Replace rings and check cylinder.
	Excessive main or connecting rod bearing clearance.	Determine bearing clearance. (See Connecting Rod Bearing Clearance Check in Section 30, Group 25.)
	Piston ring, piston, or cylinder worn.	Bore or hone cylinder and replace piston.
	Piston ring end gaps not correct.	Stagger piston ring gaps.
	Piston rings installed incorrectly.	Install piston rings correctly.
High Oil Pressure	High Oil Pressure	Improper engine oil viscosity and type - replace engine oil and filter.
		Oil pressure relief valve failed. Inspect oil pressure relief valve. (See Oil Pump in Section 30, Group 30.)

PREVIEW - YOUFIXTHIS.COM

Download full manual at youfixthis.com

Group 15 - Hydraulic Schematics

Hydraulic Schematic

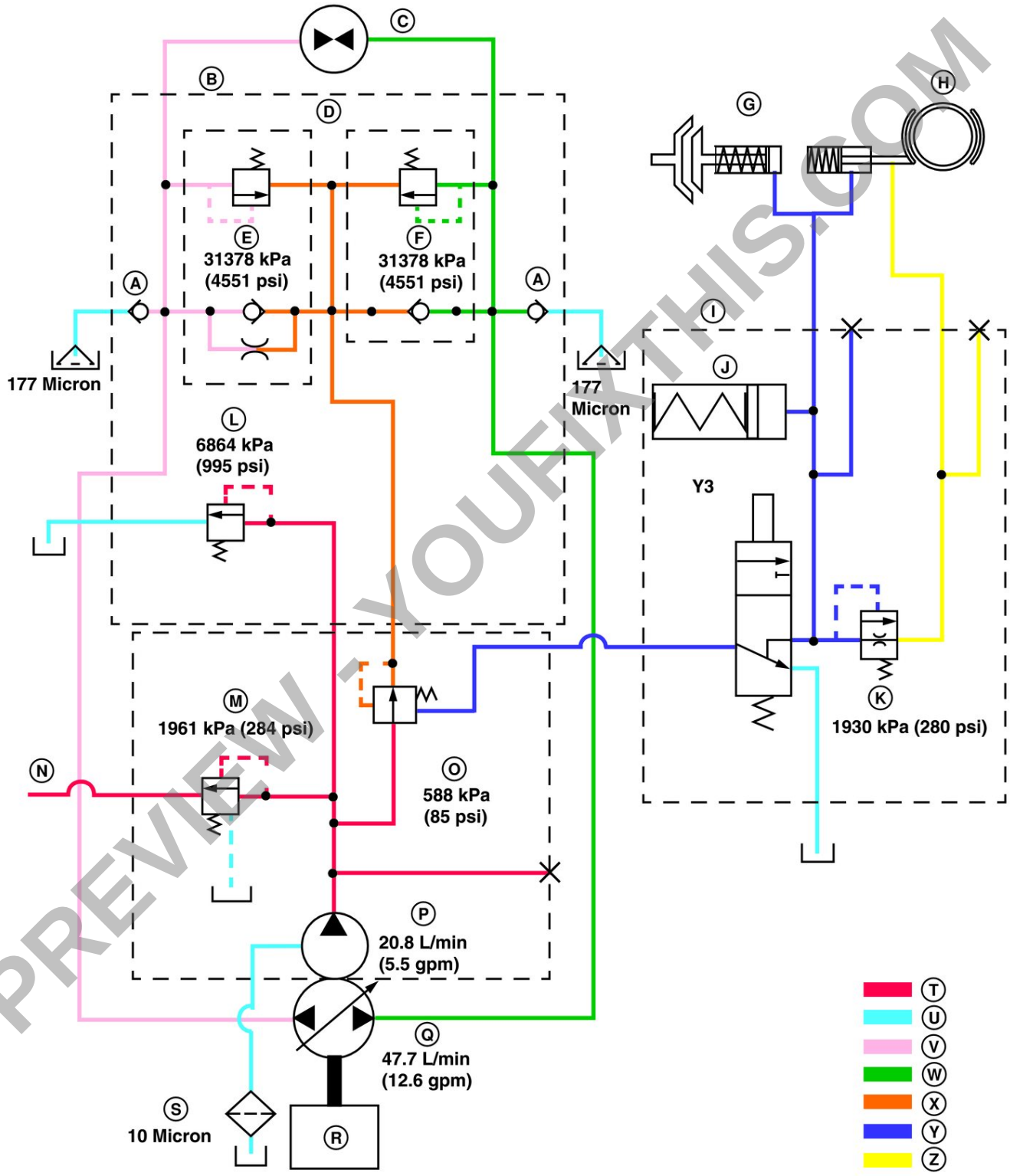

Hydraulic Schematic

LEGEND:

PREVIEW - YOUFIXTHIS.COM

Download full manual at youfixthis.com

PREVIEW - YOUFIXTHIS.COM

Download full manual at youfixthis.com

Air Intake System

Function:

To supply clean air to the engine for combustion. New Closed Crankcase Ventilation system is routed to intake system to burn crankcase gasses, reducing engine emissions.

Theory of Operation:

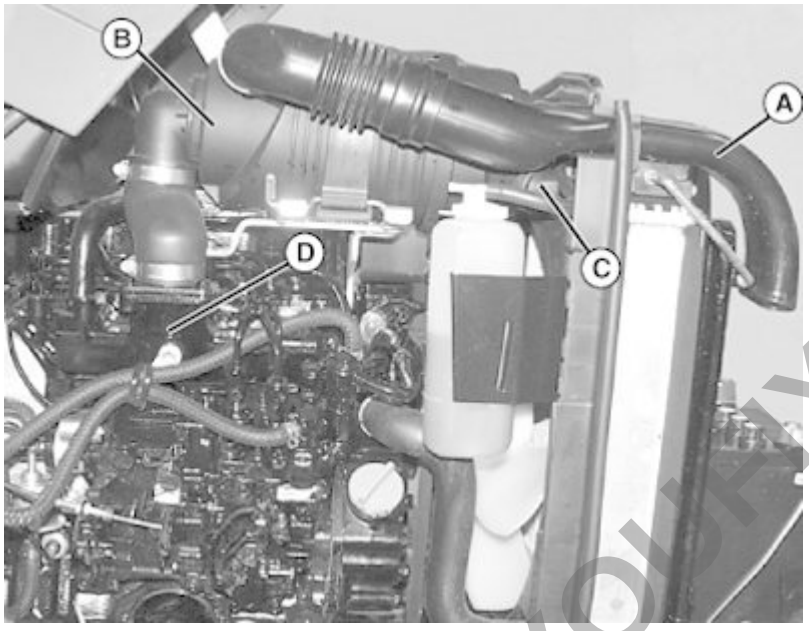

Air Intake System Operation.

LEGEND:

- A Radiator
- B Air Cleaner Housing
- C Unloader Valve
- D Intake Manifold

Air enters the air cleaner inlet tube above the radiator (A) and is directed into the air cleaner housing. The air is directed to a baffle which starts a high-speed centrifugal motion of air which continues around the element until it reaches the far end of the air cleaner housing (B).

Most of the dust is separated from the air by centrifugal force that causes heavy dust particles to enter the opening at the unloader valve (C). The air flows through the primary air filter element. The primary filter element filters the larger dirt particles before the air enters the secondary air filter element. The finer dirt particles are filtered out by the secondary air filter before the air enters the intake manifold (D).

The dirt that is deposited in the unloader valve is removed through the rubber diaphragm at the base of the air cleaner. When the engine is running, a pulsing action is created in the intake system by each intake stroke of the engine. This pulsing action causes the rubber

PREVIEW - YOUFIXTHIS.COM

Download full manual at youfixthis.com

→NOTE:

Some engine models may require the intake manifold and fuel injection pump insulator be removed to access the inner fuel injection pump retaining nuts.

Loosen the rear bracket(s) on the fuel injection pump.

[6] -

→NOTE:

Loosening the high-pressure injection line nuts on the fuel injection pump may make rotating the pump easier.

Rotate the fuel injection pump until the dial indicator reads 2.5 mm (0.098 in.). To advance timing, rotate top of injection pump away from the engine. To retard timing, rotate top of injection pump toward the engine.

[7] - When the dial indicator reads 2.5 mm (0.098 in.) of pump plunger lift and the target timing mark on the flywheel is aligned with the reference mark on the flywheel housing or engine backplate, the injection timing is correct.

[8] - Tighten the fuel injection pump mounting nuts and rear bracket(s).

[9] - Remove the dial indicator and adapter. Replace the plug and copper gasket in the pump plunger opening and tighten. If removed, install intake manifold and pump insulator. Tighten the high-pressure injection line nuts to specification. Open fuel shutoff valve and remove clamp from fuel return line. Prime the fuel system. Operate engine and check for leaks.

Item	Measurement	Specification
Injector Line Nuts	Torque	3 —35 N·m (22—25 lb.-ft.)

Installing a New or Recalibrated Injector Pump:

[1] - Locate and record the timing index number on the replacement injection pump.

Download full manual at youfixthis.com
PREVIEW - YOUFIXTHIS.COM

[6] - Remove the three special nuts (G).

[7] - Remove rocker cover (I).

[8] -

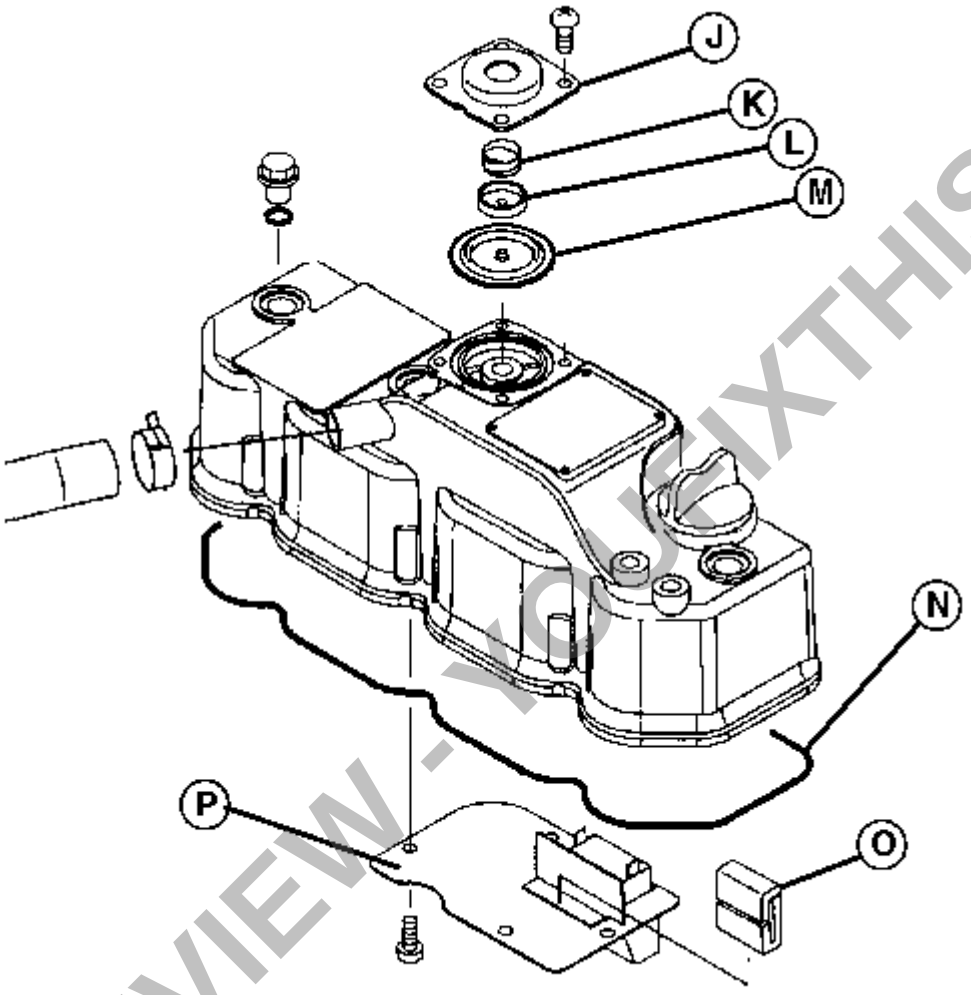

Rocker Cover Removal

LEGEND:

J	Diaphragm Cover
K	Spring
L	Center Plate
M	Diaphragm
N	O-Ring
O	Breather Baffle
P	Baffle Plate

Remove diaphragm cover (J), spring (K), center plate (L), and diaphragm (M).

PREVIEW - YOUFIXTHIS.COM

Download full manual at youfixthis.com



Piston Pin Bore

Measure the pin bore diameter in the piston.

Item	Measurement	Specification
Piston Pin Bore	ID	26.00—26.01 mm (1.023—1.024 in.)
Piston Pin Bore Wear Limit	ID	26.04 mm (1.025 in.)

[2] - Piston pin-to-piston oil clearance is the bore ID minus the pin OD.

Item	Measurement	Specification
Piston Pin-to-Piston Oil	Clearance	0.00—0.02 mm (0.00—0.001 in.)
Piston Pin-to-Piston Wear Limit	Clearance	0.12 mm (0.005 in.)

- If the piston pin bore exceeds the wear limit, replace the piston.
- If the piston pin is less than the wear limit, replace the piston pin.
- If the bore clearance exceeds the wear limit replace the piston, piston pin or both.

Piston Pin Bushing:

[1] -

PREVIEW - YOUFIXTHIS.COM

Download full manual at youfixthis.com

- S2 - MFWD Switch (SE4, W1)
- S3 - Seat Switch (SE3, W1)
- S4 - Transmission Neutral Switch (SE3, W1)
- S5 - PTO Switch (SE3, W1)
- S6 - Rear PTO Switch (SE3, W1)
- S7 - Park Brake Switch (SE3, W1)
- S8 - Turn Signal Switch (SE5, W1)
- S9 - Light Switch (SE5, W1)
- S10 - Reverse Switch (SE3, W1)
- V1 - Diode (SE1, W1)
- W1 - Frame Ground (SE1, W1)
- W2 - Frame Ground (SE1, W1)
- Y1 - Starting Motor Solenoid (SE1, W2)
- Y2 - Fuel Shutoff Solenoid (SE2, W1)
- Y3 - PTO Solenoid (SE3, W1)

Wiring Harnesses:

- W1 - Main Wiring Harness
- W2 - Power Supply Wiring Harness
- W3 - Battery Cable Wiring Harness
- W4 - Engine Wiring Harness

PREVIEW - YOUFIXTHIS.COM

Download full manual at youfixthis.com

Fuel Supply Diagnosis

Test Conditions:

- Park brake LOCKED
- Key switch in ON position (Engine NOT running)
- Operator Off seat (unless otherwise specified)
- PTO switch OFF
- Transmission in neutral

Fuel Supply PTO Off, Operator Off and On Seat:

(1) Step 1

Action:

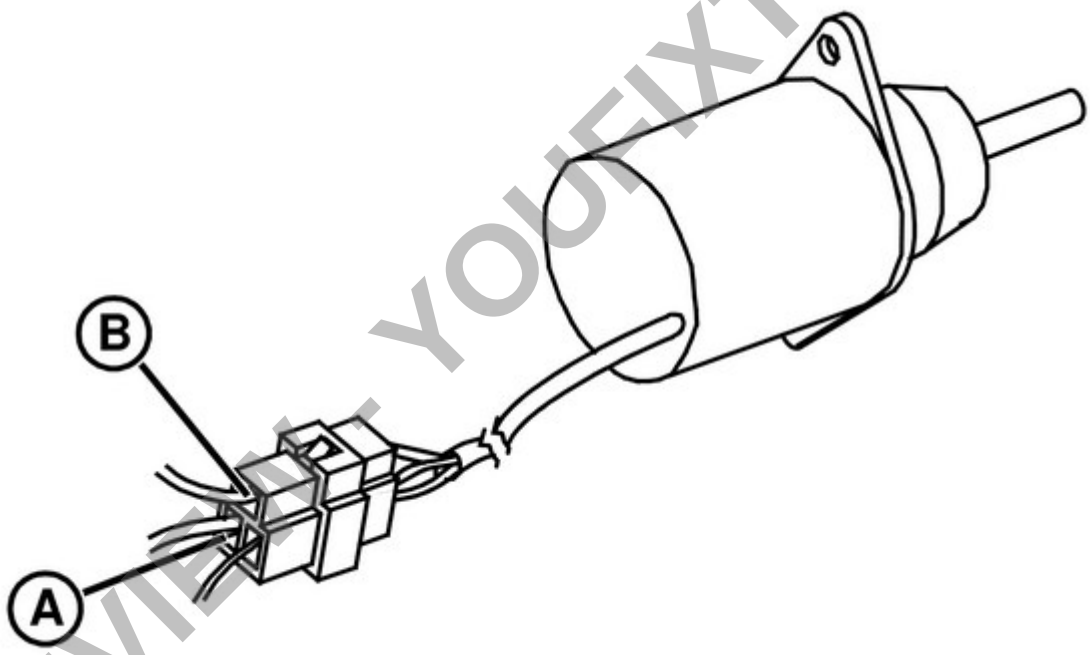

Y2 fuel shutoff solenoid

LEGEND:

A E07 Grn/Red Wire
B G01 Blk/Red Wire

Is battery voltage present at the Y3 fuel shutoff solenoid, E07 Grn/Red Wire (A)?

Result:

YES: Go to next step.

NO: Go to step 3.

PREVIEW - YOUFIXTHIS.COM

Download full manual at youfixthis.com

(12) Step 12

Action:

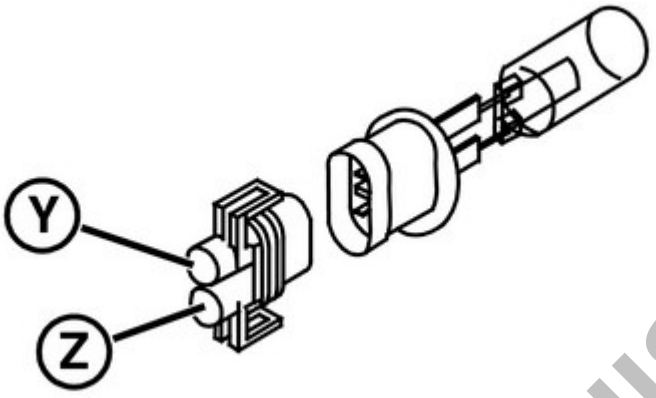

Lights—Work Lights Circuit

LEGEND:

Y L08 Gry Wire
Z G02 Blk/Red Wire

Is battery voltage present at the E1 right headlight, L08 Gry Wire (Y)?

Result:

YES: Go to next step.

NO: Test F8 15A fuse. Check L03 Red/Wht, L08 Gry wires and connections. If OK, replace light switch.

(13) Step 13

Action:

Is continuity to ground present at the E1 right headlight, G02 Blk/Red wire (Z)?

Result:

YES: Test bulb. Go to next step.

NO: Check G02 Blk/Red wire and connections.

PREVIEW - YOUFIXTHIS.COM

Download full manual at youfixthis.com

Results:

- If any continuity is NOT correct, replace the switch.

PREVIEW - YOUFIXTHIS.COM

Download full manual at youfixthis.com

G2 Alternator
Y1 Starting Motor Solenoid

PREVIEW - YOUFIXTHIS.COM

Download full manual at youfixthis.com

(7) Step 7

Action:

Place seat switch in the on position (operator on seat) and the PTO switch in the on position. Is battery voltage present at the seat switch, L06 Blu wire (G)?

Result:

YES: Hold-in circuit test complete. Go to pull-in circuit test.

NO: Replace the seat switch.

PREVIEW - YOUFIXTHIS.COM

Download full manual at youfixthis.com

F2 Fuse
F4 Fuse
F5 Fuse
G1 Battery
K6 Power Outlet Relay
M1 Starting Motor
S1 Key Switch
W1 Frame Ground
W2 Frame Ground
X7 Power Port
Y1 Starting Motor Solenoid

PREVIEW - YOUFIXTHIS.COM

Download full manual at youfixthis.com

K PTO Clutch/Brake Pressure Oil
L Lubrication Oil

Function:

To provide control of the engagement and disengagement of the PTO clutch and PTO brake.

Theory:

The charge pump (B) provides oil, under pressure, to the Y3 PTO solenoid. When the Y3 PTO solenoid is de-energized (top illustration, C), oil passes directly through the solenoid spool to the sump. When the Y3 PTO solenoid is energized (bottom illustration, I), pressure oil flows to the PTO brake piston, which compresses the PTO brake spring and releases the PTO brake. At the same time that the PTO brake is released pressure oil flows through the PTO clutch shaft into the PTO clutch and pressurizes the piston in the PTO clutch. The PTO clutch piston locks the PTO clutch which is keyed to the PTO shaft and transfers power to the PTO gears. When the PTO clutch/brake system reach maximum pressure the relief valve opens allowing excess oil to flow through passages in the transmission to provide additional lubrication and cooling oil to the bearings, clutch plates, and brake plates. Oil then passes to the sump (A).

A spring loaded reservoir is provided in the circuit to act as a buffer and provide a “soft start” to the clutch.

PREVIEW - YOUFIXTHIS.COM

Download full manual at youfixthis.com

[10] -

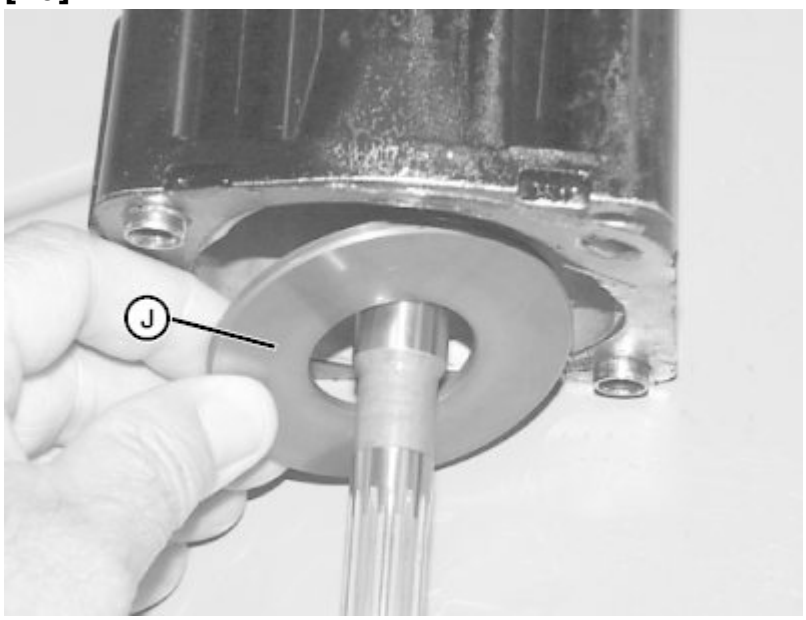

Install Thrust Washer

LEGEND:

J Thrust Washer

Put some oil on the thrust washer (J) and install it in the motor housing.

[11] -

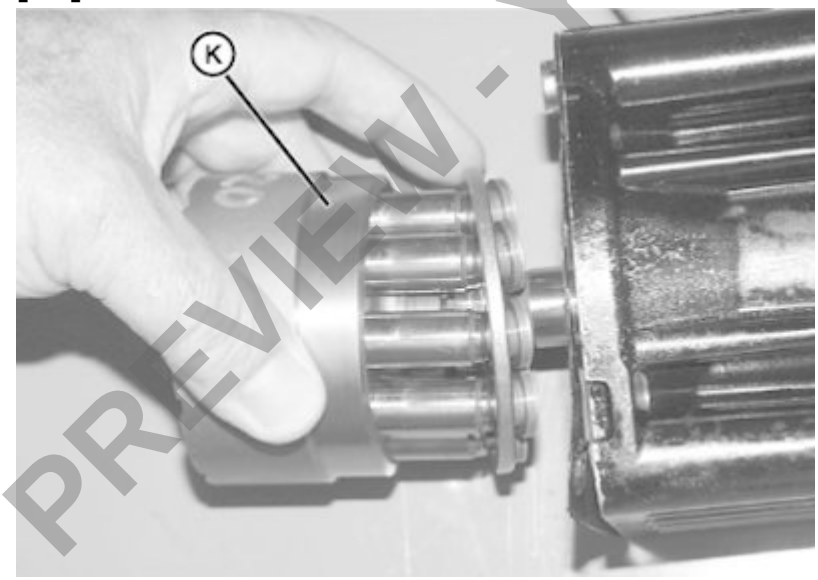

Install Piston Block Assembly

LEGEND:

K Piston Block Assembly

Slide piston block assembly (K) onto splines on hydrostatic motor output shaft.

PREVIEW - YOUFIXTHIS.COM

Download full manual at youfixthis.com

[44] -

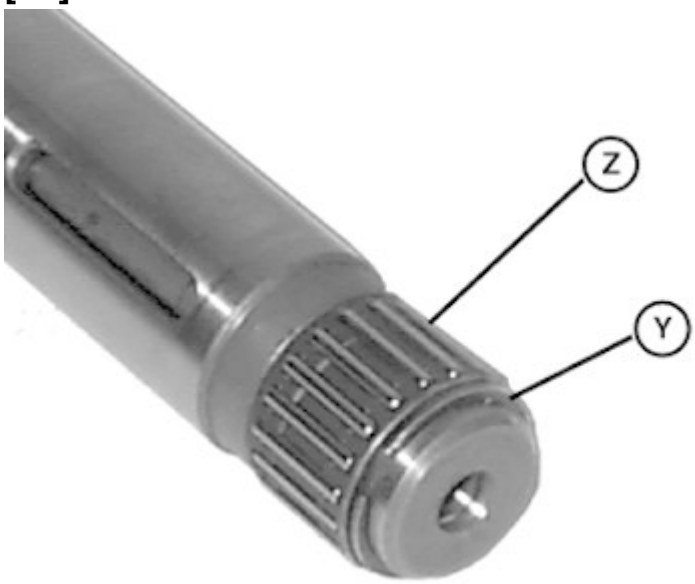

Transmission Disassembly

LEGEND:

Y Snap Ring
Z Needle Bearing

Remove snap ring (Y) retaining needle bearing (Z) on end of PTO clutch shaft. Remove needle bearing.

[45] -

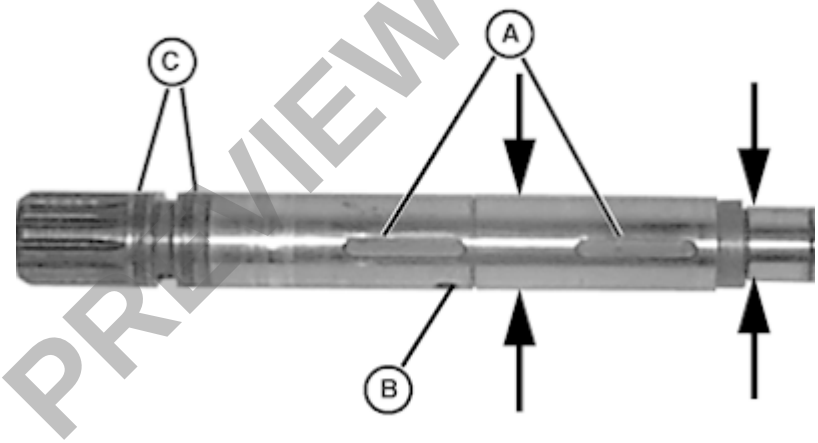

Transmission Disassembly

LEGEND:

A Key (2 used)
B Fiber Washer (2 used)
C Snap Ring

Remove keys (A), snap ring (B), and fiber washers (C) from PTO clutch shaft.

PREVIEW - YOUFIXTHIS.COM

Download full manual at youfixthis.com

LEGEND:

E Plate
F Notch in Rod

As center case is lowered onto differential housing, make sure that plate (E) engages notch in rod (F).

[64] - Rotate mid PTO shaft and/or input stub shaft, and/or PTO shaft in order to align gears.

[65] - Secure center case to differential housing with cap screws as indicated in parts list. Tighten to specification.

Item	Measurement	Specification
Center Case to Differential Housing Cap Screws	Torque	23—30 N·m (17—22 lb.-ft.)

[66] -

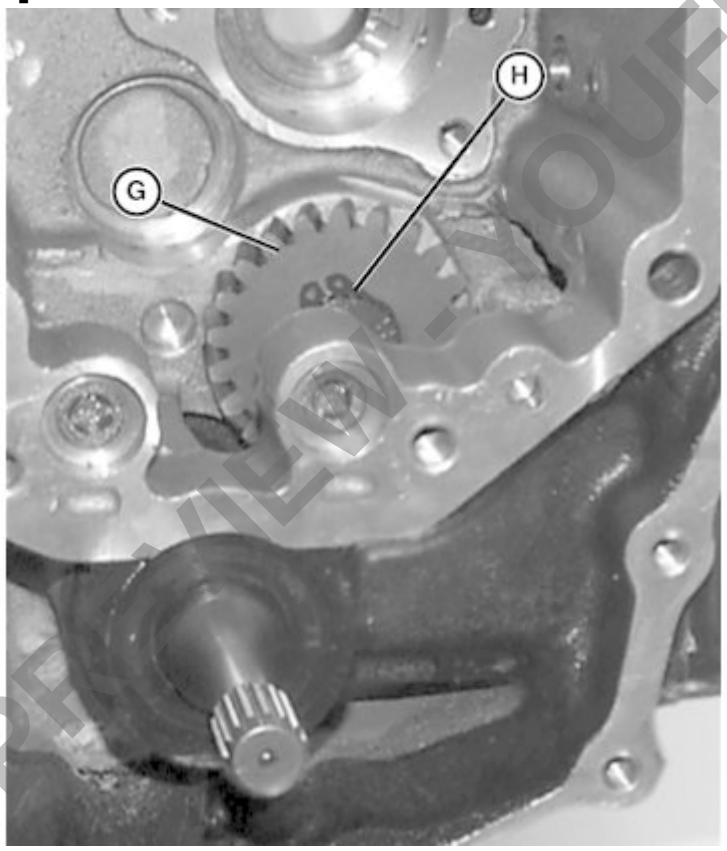

Transmission Assembly

LEGEND:

G 21T Gear
H External Snap Ring

Place 21T gear (G) onto range selection shaft and secure with external snap ring (H).

PREVIEW - YOUFIXTHIS.COM

Download full manual at youfixthis.com

LEGEND:

A Primary Spool
B Secondary Spool
C System Pressure Oil
D Return Oil
E OUT
F IN

Function:

Controls the flow of pressure oil to the ‘A’ work port of the SCV and allows return oil to the ‘B’ work port to exit the valve housing. The primary and secondary spools may be operated independently.

System Operation:

As the control lever and linkage moves either of the spools toward the lower position, the open center passage is closed off, increasing inlet pressure at the ‘A’ work port. When inlet pressure overcomes the pressure of the ‘A’ work port, and oil flow starts to move the load, the lower check valve opens. The lift check valve prevents the load from moving before inlet pressure overcomes the load or if the hydraulic system should lose pressure. High pressure oil acting against the cylinder, makes the cylinder retract. The oil from the rod end of the cylinder returns though the ‘B’ work port to return oil and exits the control valve.

PREVIEW - YOUFIXTHIS.COM

Download full manual at youfixthis.com

H Seal Washer
I Special Bolt

Hold cylinder (C) with large opening down and remove piston (F) from bore.

[5] - Inspect cylinder bore, piston (F), piston seal (E) and special bolt (I) for damage. Replace as necessary.

[6] - Replace O-ring (G) and seal washer (H).

Depth Control Mechanism Removal:

[1] - Remove cylinder if not already removed.

[2] - Remove rockshaft control valve. (See Rockshaft Control Valve Removal and Installation in Section 60, Group 40.)

[3] -

IMPORTANT:

Avoid Damage! Do not force components during disassembly or assembly. Clearances are tight and components must be free to move for depth control mechanism to function correctly.

Depth control mechanism components must be removed and replaced in order. Incorrect assembly will result in damage to components which in turn could severely damage entire mechanism.

PREVIEW - YOUFIXTHIS.COM

Download full manual at youfixthis.com

4 Cap Screw (5 used)
5 Nylock Nut (2 used)
6 Park Brake Link
7 Turnbuckle (2 used)
8 Spring Clip (8 used)
9 Drilled Pin (6 used)
10 Cam Lever Shaft (right)
11 Brake Rod (upper) (2 used)
12 Nut (5 used)
13 Washer (10 used)
14 Brake Rod (lower) (2 used)
15 Bolt w/Washer (4 used)
16 Park Brake Arm
17 Rolled Pin (inner) (2 used)
18 Rolled Pin (outer) (2 used)
19 Brake Cam (right)
20 Cam Lever Shaft
21 Bearing (2 used)
22 Spring (2 used)
23 Park Brake Shaft Stay
24 Bolt w/Washer
25 Lubrication Fitting
26 Brake Cam (left)
27 Cam Lever Shaft (left)
28 Brake Stay
29 Cruise Link
30 Pivot Bolt (2 used)
31 Brake Pedal Arm (left)
32 Cruise Link
33 C-Clip
34 Spacer
35 Brake Pedal Arm (right)
36 Cruise Arm
37 Cruise Link

Brake Housing Component Location

PREVIEW - YOUFIXTHIS.COM

Download full manual at youfixthis.com

PREVIEW ONLY

You're viewing 25 of 1300 pages

The full manual includes:

- All 1300 pages, complete
- Searchable PDF (find any keyword)
- No watermarks
- Instant download
- Print-ready quality

GET FULL MANUAL NOW

John Deere 2027R, 2032R Technical Manual

Scan or click anywhere
youfixthis.com

Click anywhere on this page to get the full manual