Main Wiring Harness (Manual Controls)
Faisceau principal (commandes manuelles)
Grupo de cables principal (controles manuales)

AT348459_TX1066048 D.2

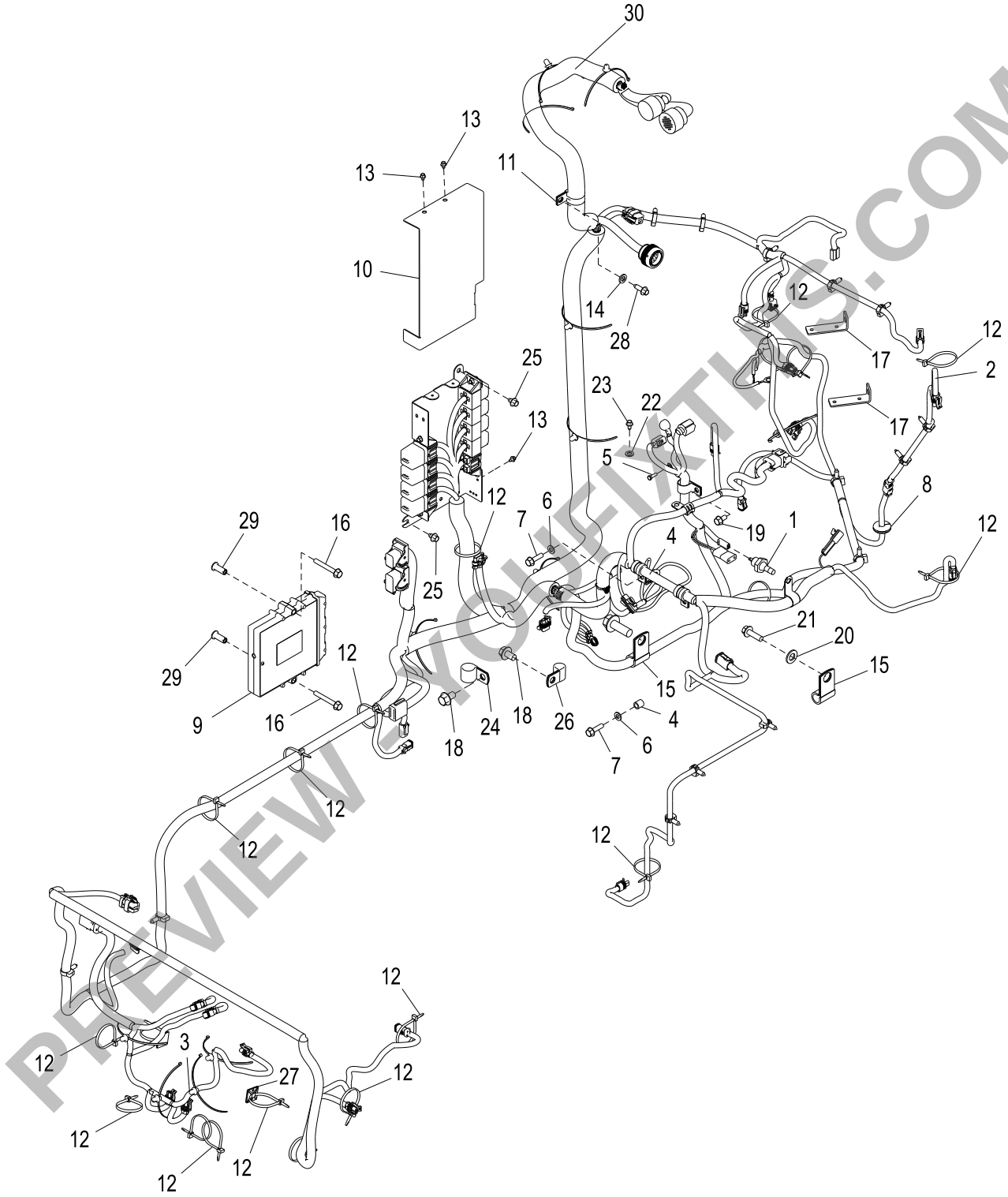

AT348459_TX1066048

PREVIEW - YOUFIXTHIS.COM

Download full manual at youfixthis.com

Hydrostatic Pumps (Manual Controls)
Pompes hydrostatiques (commandes manuelles)
Bombas hidrostáticas (controles manuales)

AT347705_TX1064981 A.1

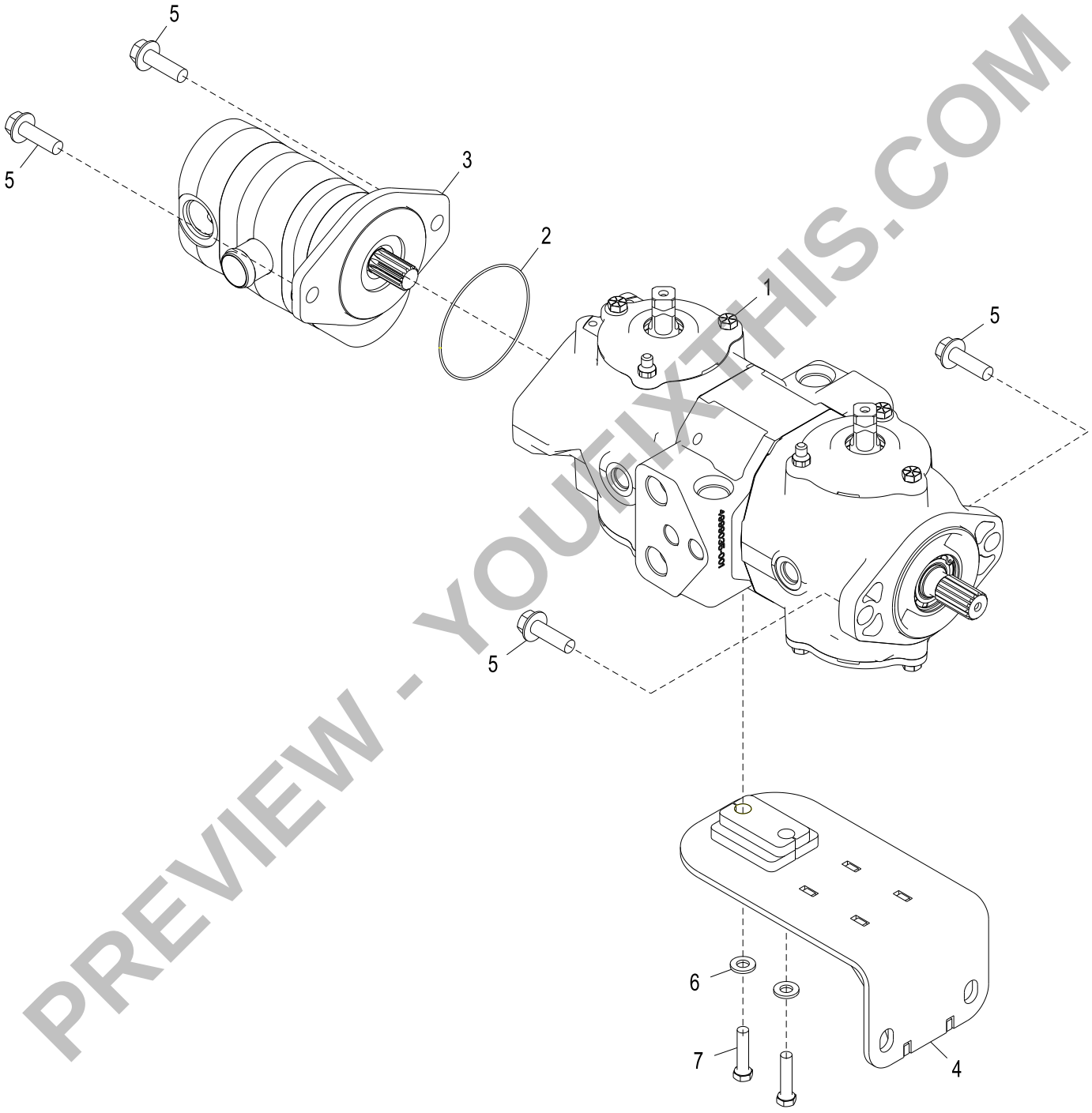

AT347705_TX1064981

PREVIEW - YOUFIXTHIS.COM

Download full manual at youfixthis.com

1109 Rocker Arm Cover
1109 Cache-culbuteurs
1109 Tapa de balancines

1109_RE529372_PCD A.1

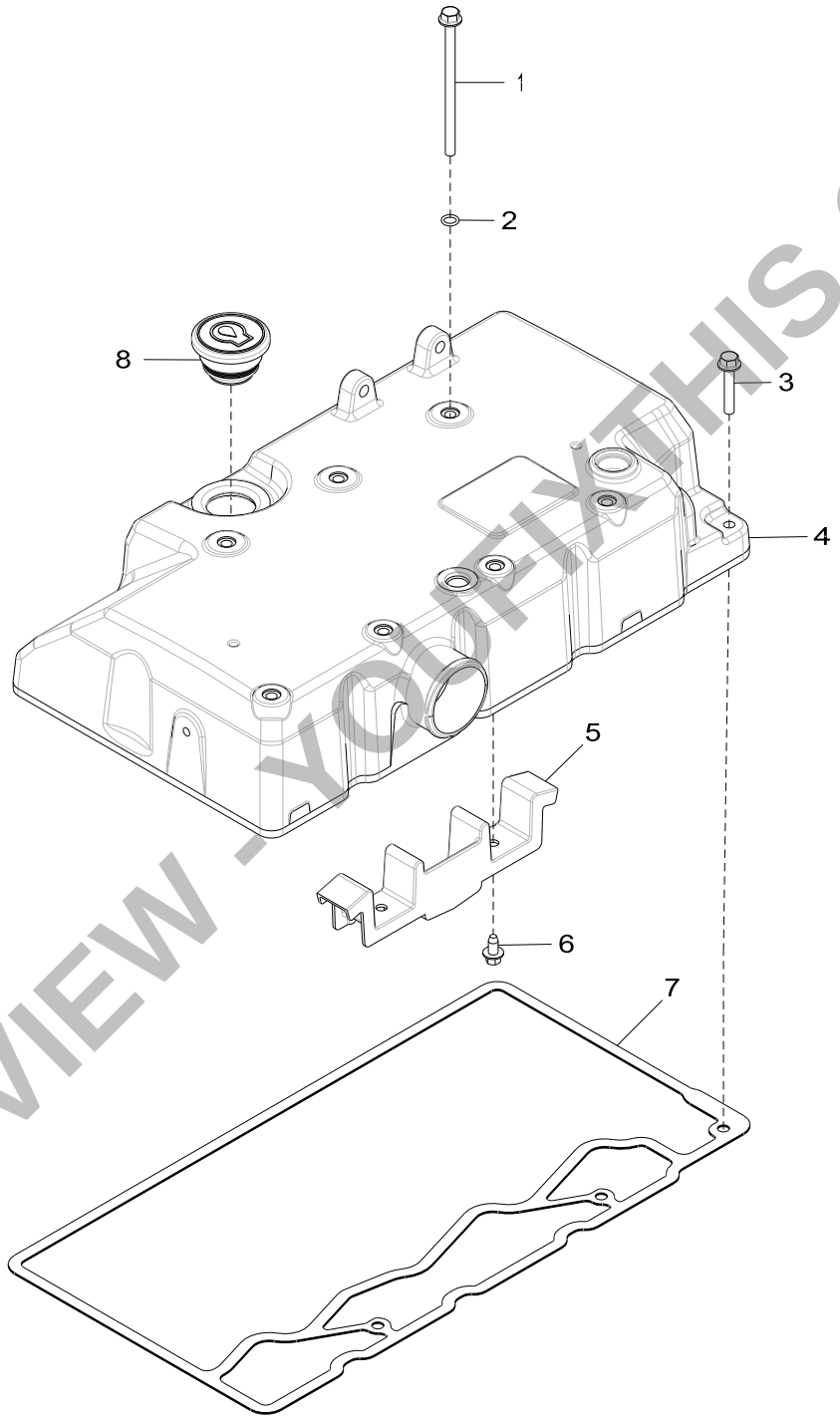

1109_RE529372_PCD

PREVIEW - YOUFIXTHIS.COM

Download full manual at youfixthis.com

Cab Door (- 269401)
Porte de cabine (- 269401)
Puerta de la cabina (- 269401)

AT346943_TX1063997 C.2

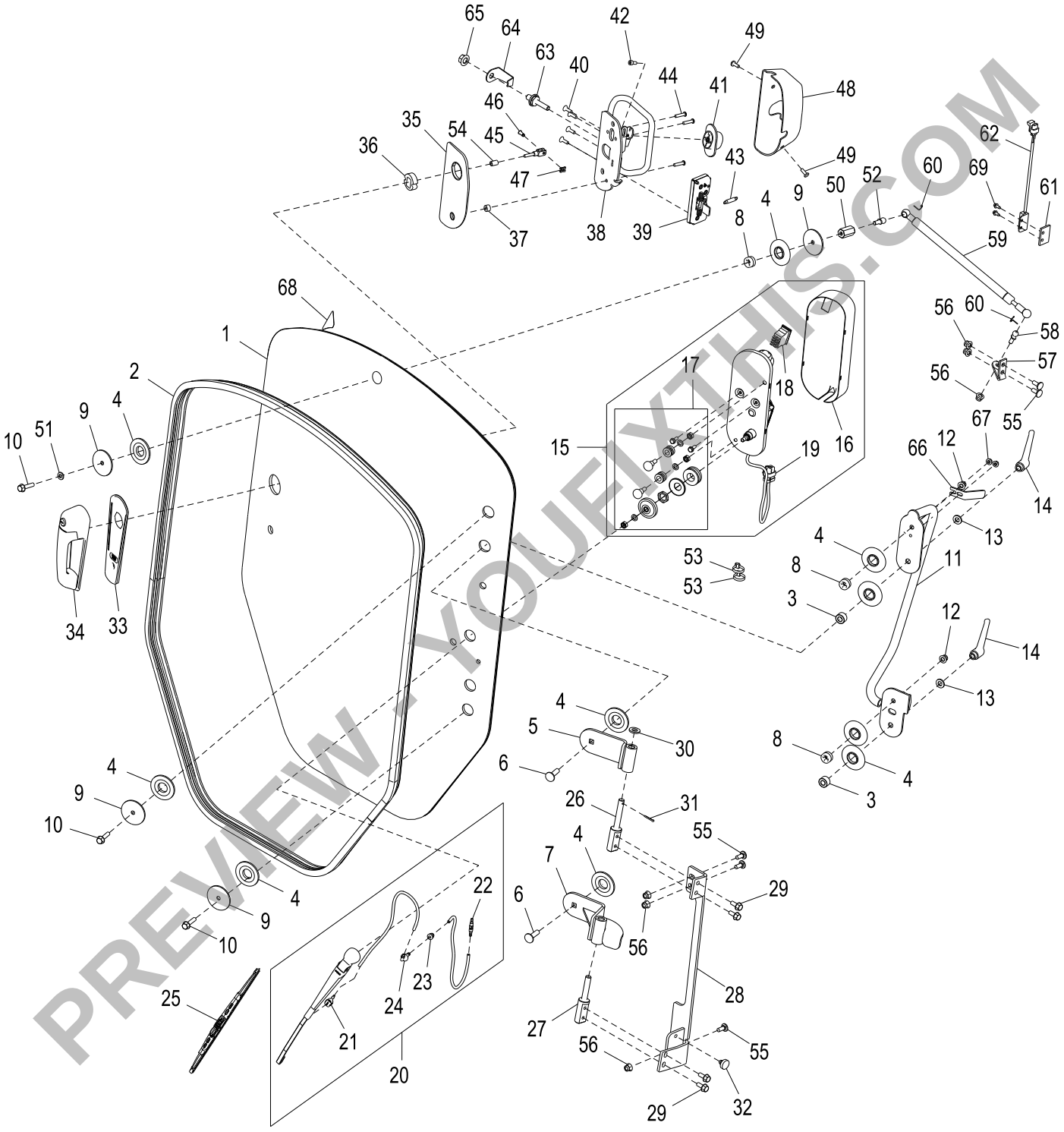

AT346943_TX1063997

PREVIEW - YOUFIXTHIS.COM

Download full manual at youfixthis.com

Frame Covers and Boom Lock (Manual Controls)
Couvercles de châssis et verrouillage de flèche (commandes manuelles)
Cubiertas de bastidor y bloqueo de aguilón (Controles manuales)

AT347405_TX1062141 D.1

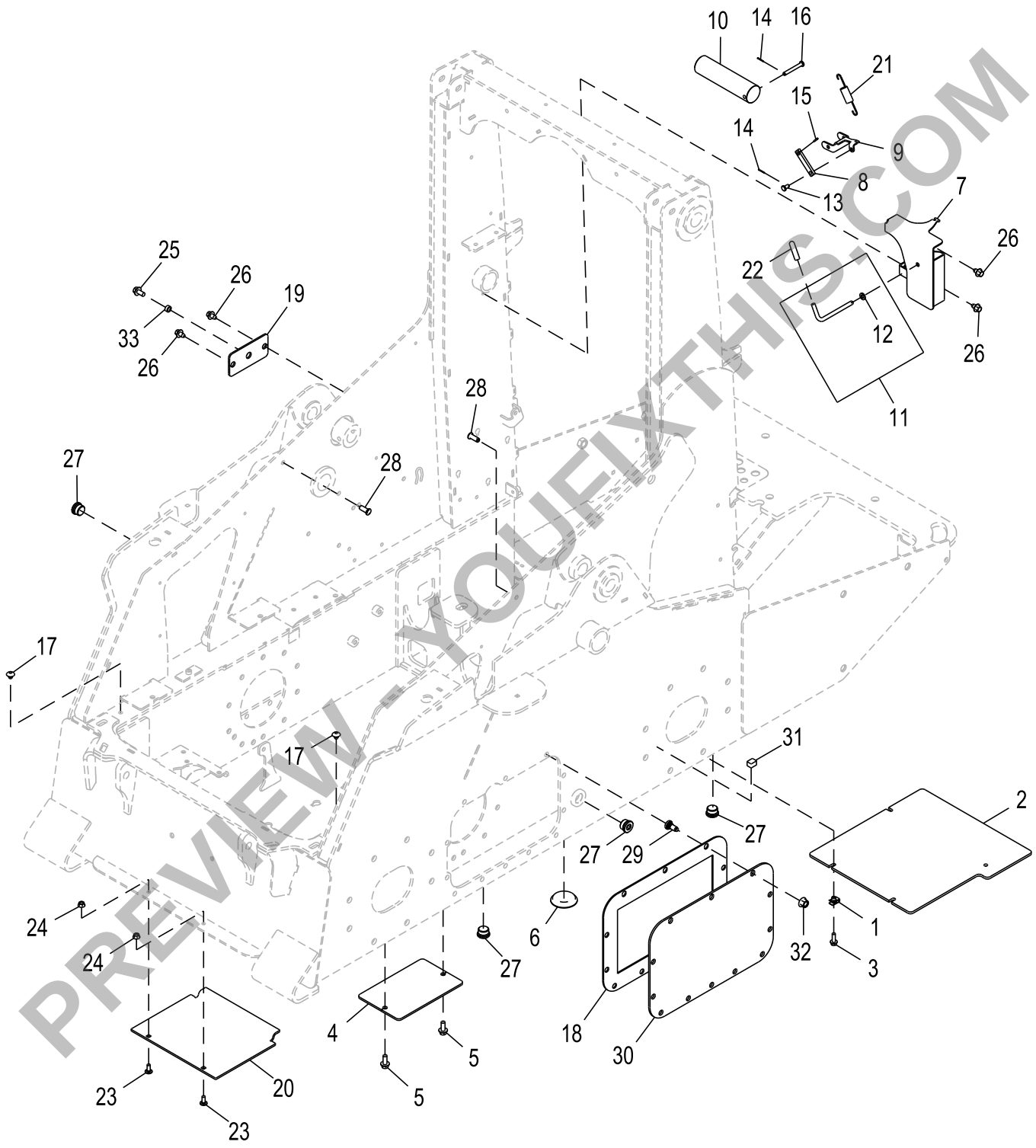

AT347405_TX1062141

PREVIEW - YOUFIXTHIS.COM

Download full manual at youfixthis.com

Boom (- 179866)
Flèche (- 179866)
Aguilón (- 179866)

AT348760_TX1064353 D.1

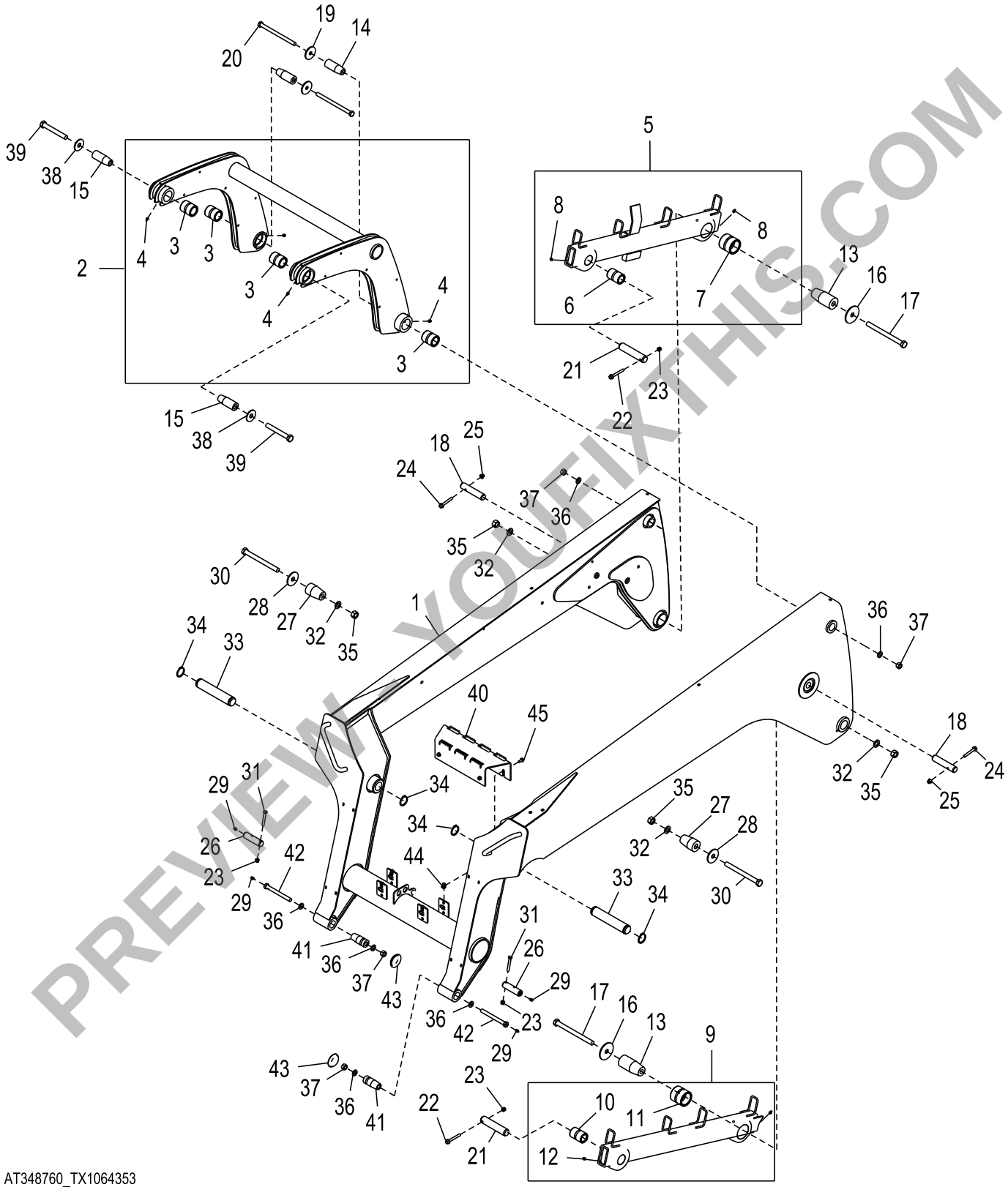

AT348760_TX1064353

PREVIEW - YOUFIXTHIS.COM

Download full manual at youfixthis.com

Main Wiring Harness Connectors, Manual Controls
Connecteurs de faisceau principal, commandes manuelles
Conectores de grupo de cables principal, controles manuales

AT359733_TX1078748 E.2

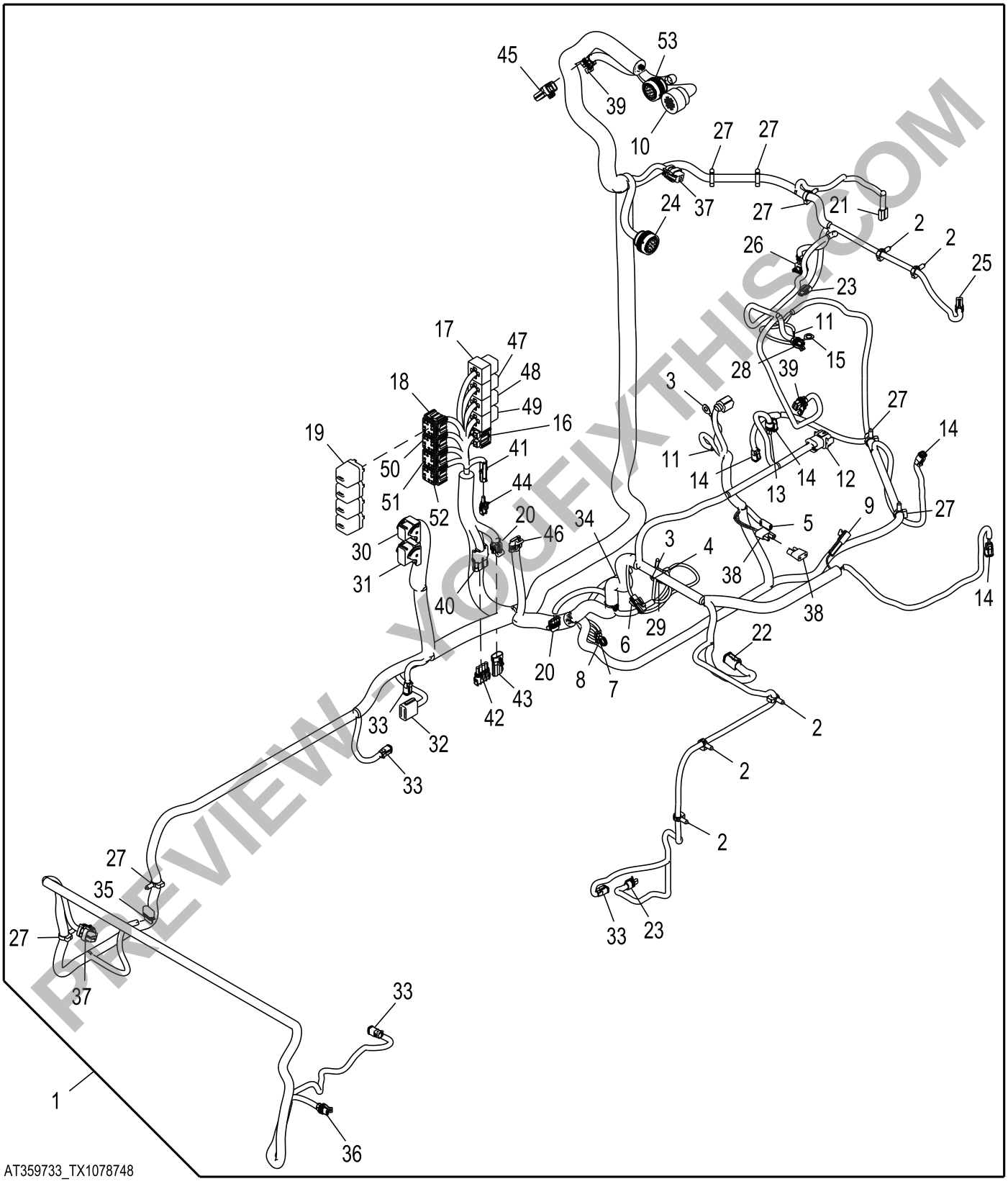

AT359733_TX1078748

PREVIEW ONLY YOUFIXTHIS.COM

Download full manual at youfixthis.com

Front Hydrostatic Pump Section (Manual Controls)
Partie avant de la pompe hydrostatique (commandes manuelles)
Sección de bomba hidrostática delantera (controles manuales)

TX1169177 B.1

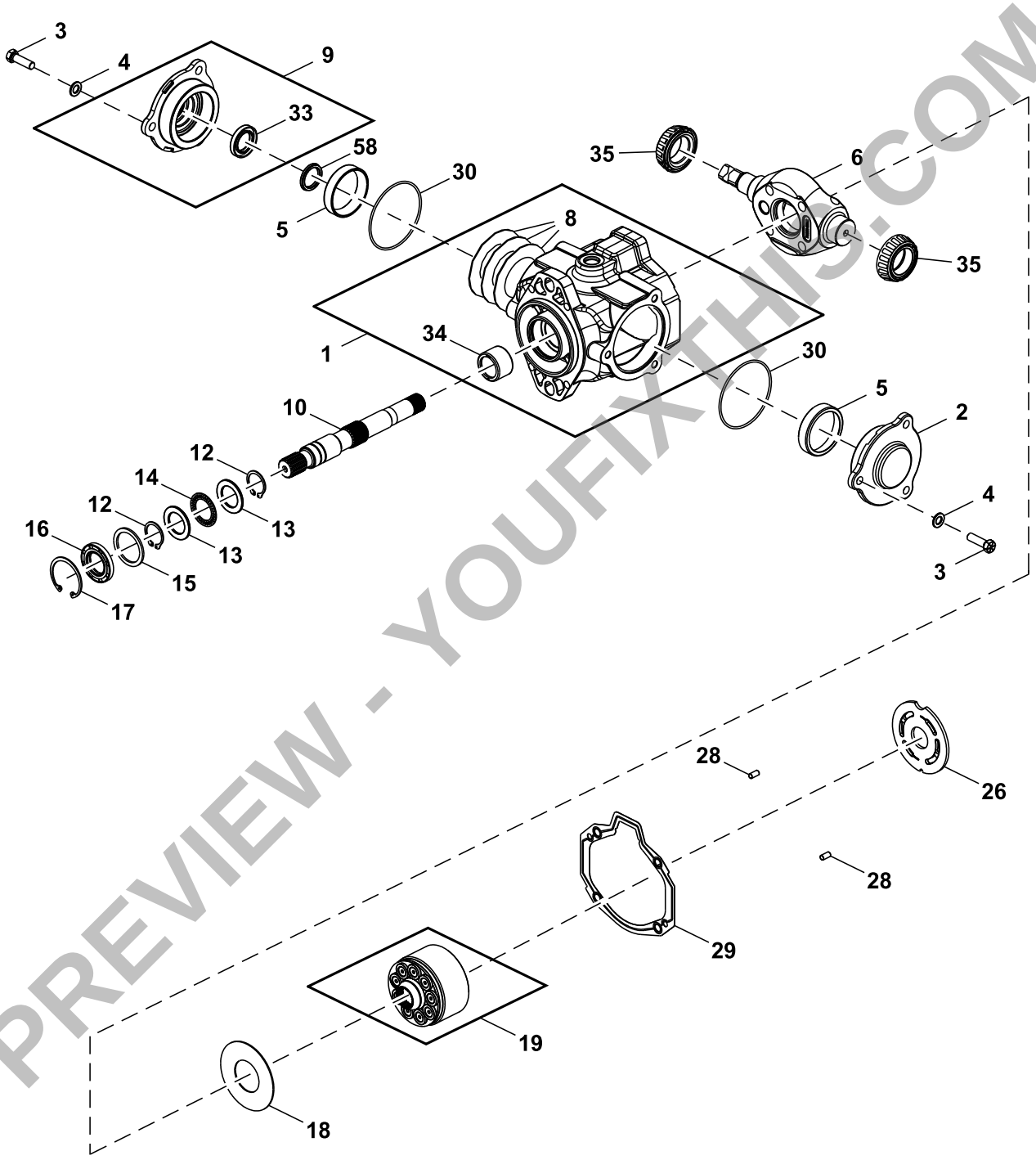

TX1169177

PREVIEW - YOUFIXTHIS.COM

Download full manual at youfixthis.com

1301 CRANKSHAFT PULLEY
1301 POULIE DE VILEBREQUIN
1301 POLEA DEL CIGUENAL

RE509117PCDD03 A.1

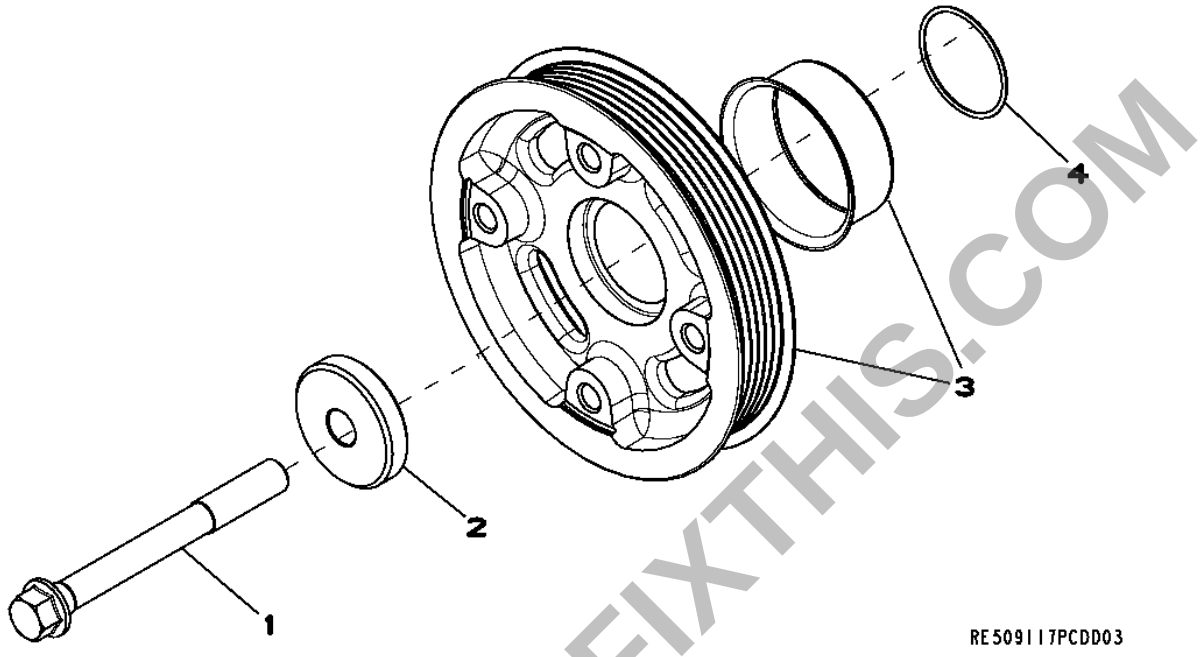

Key	*Part No.*	*Part Name*	*Qty.*	*Engine Serial No.*	*Remarks*
1	R504680	Cap Screw	1		M12 X 110
2	R502885	Bushing	1		ID 13MM
3	RE520244	Pulley	1		(ALSO ORDER AR67942)
4	T143324	O-Ring	1		

PREVIEW - YOUFIXTHIS.COM

Download full manual at youfixthis.com

Severe Duty Door (- 269401)
Portière pour service sévère (- 269401)
Puerta para servicio severo (- 269401)

AT348844_TX1081032 B.1

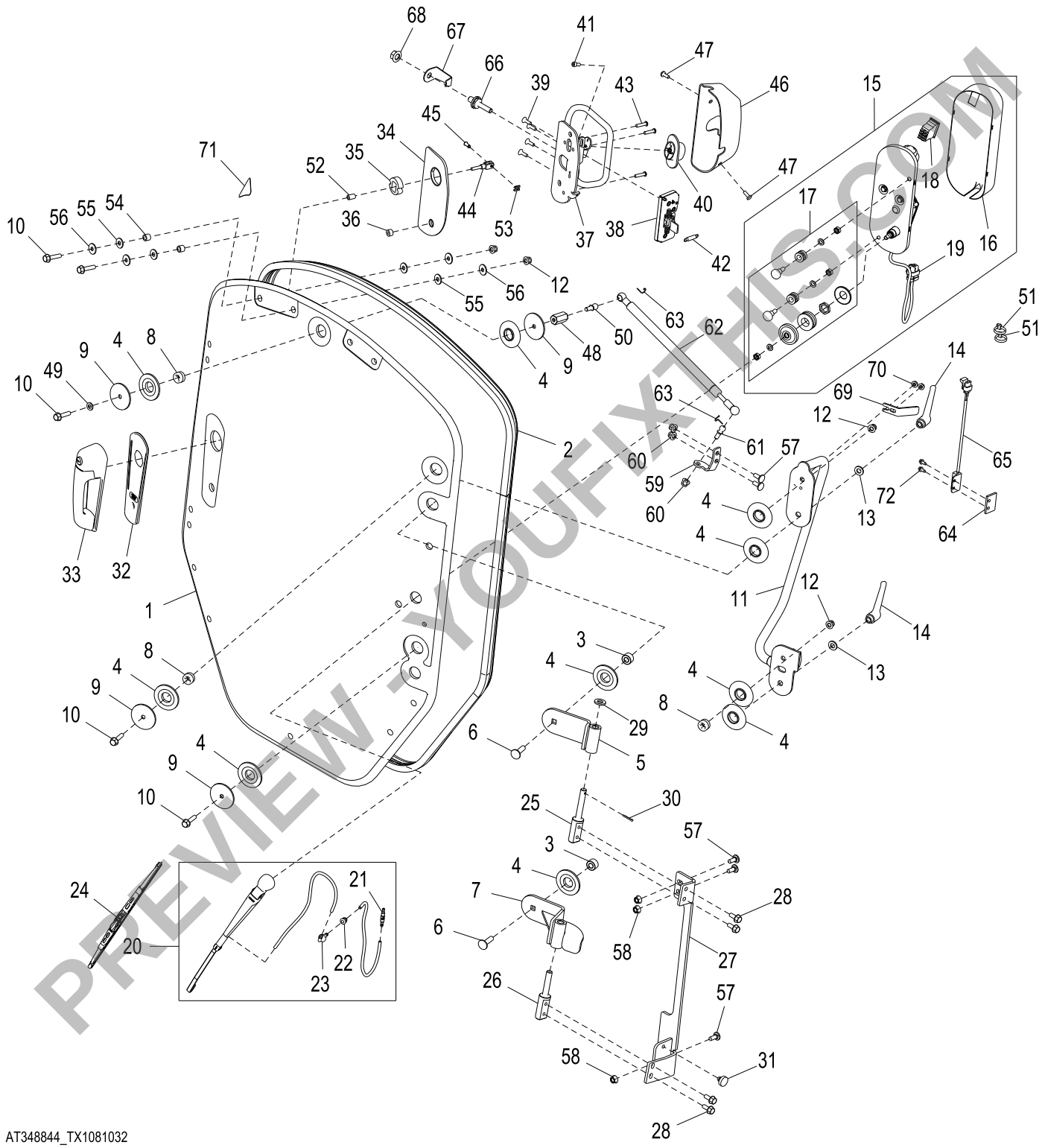

AT348844_TX1081032

PREVIEW - YOUFIXTHIS.COM

Download full manual at youfixthis.com

Frame Covers and Boom Lock (EH Controls)
Couvercles de châssis et verrouillage de flèche (commandes EH)
Cubiertas de bastidor y bloqueo de aguilón (Controles EH)

AT347850_TX1062573 A.1

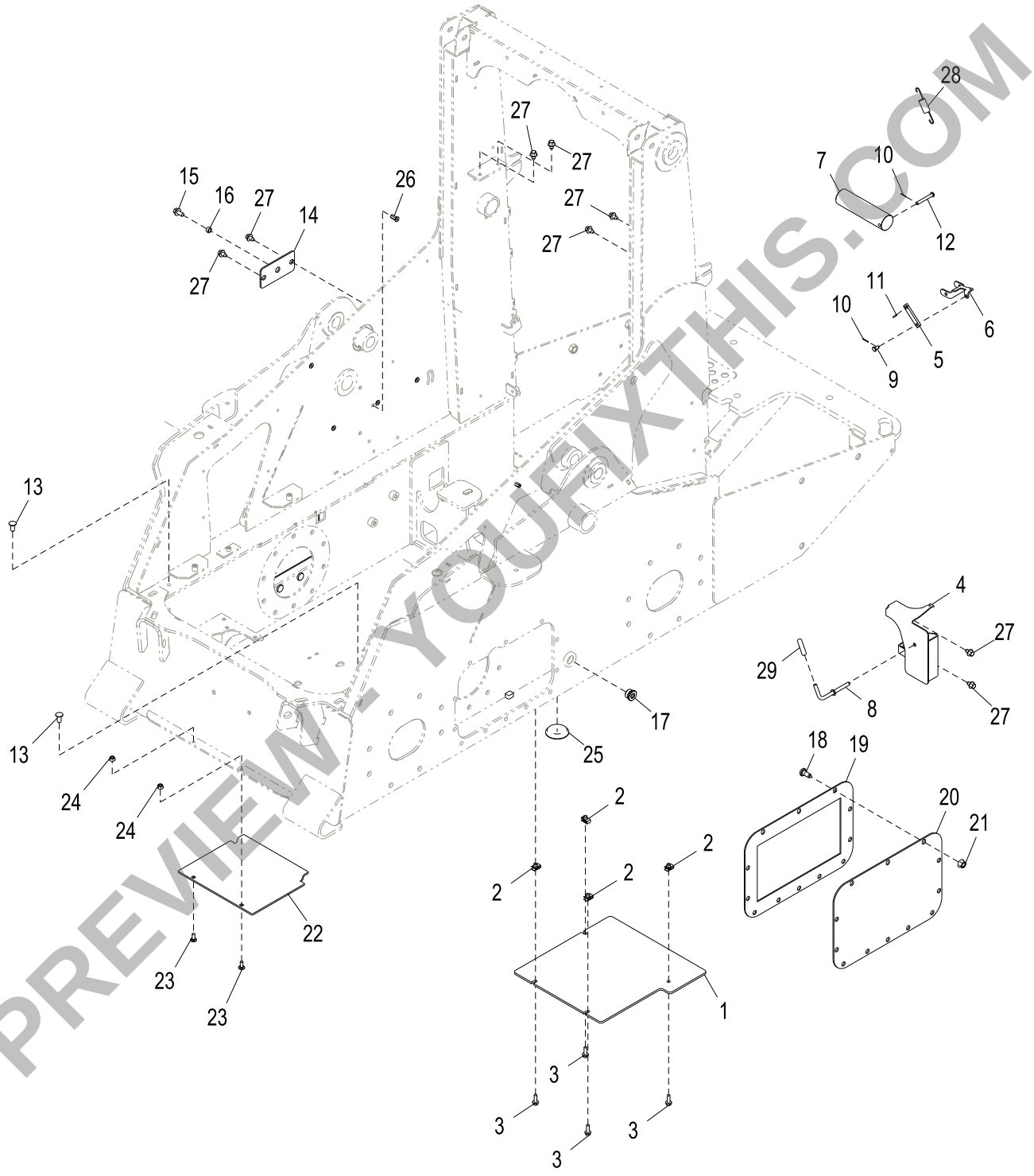

AT347850_TX1062573

PREVIEW - YOUFIXTHIS.COM

Download full manual at youfixthis.com

Boom (179867 -)
Flèche (179867 -)
Aguilón (179867 -)

AT348760_TX1078990 D.2

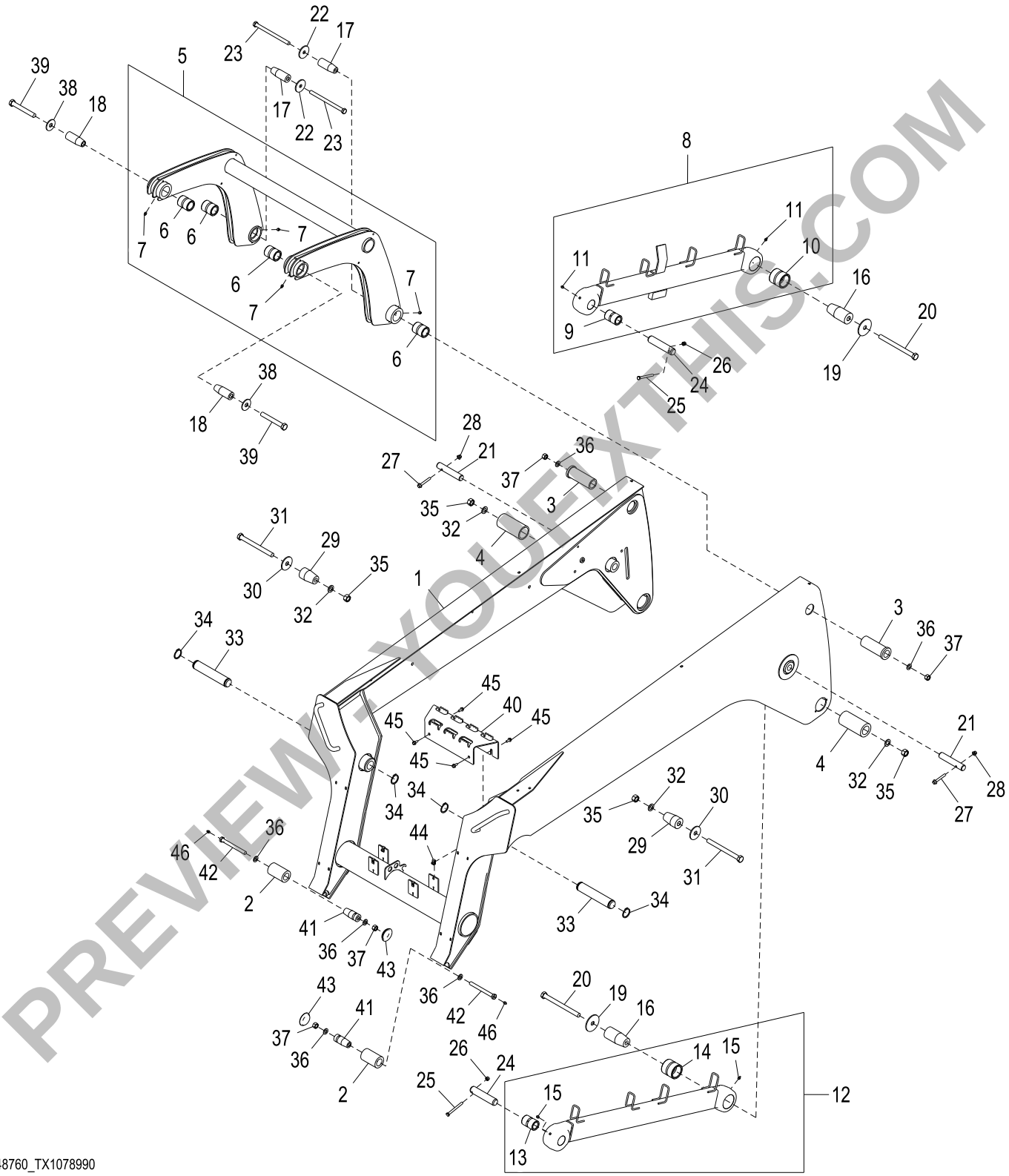

AT348760_TX1078990

PREVIEW - YOUFIXTHIS.COM

Download full manual at youfixthis.com

Table of Contents

20 Engine 4024HT011-RE528665 79
30 Engine Auxiliary System 175
40 Vehicle Electrical Systems 243
50 Power Train 315
60 Steering and Brakes 349
70 Hydraulics 395
80 Frame and Boom 551
90 Operator's Station and Decals 591

PREVIEW - YOUFIXTHIS.COM

Download full manual at youfixthis.com

Alphabetical Index

Page

1109 Rocker Arm Cover ... 82
12X16.5 12 PR Wheel and Tire Assembly ... 334
1301 CRANKSHAFT PULLEY ... 84
1402 FLYWHEEL HOUSING ... 85
1509 FLYWHEEL ... 86
1662 (FUEL INJECTION PUMP) ... 88
1918 Oil Pan ... 90
2 Speed Solenoid Connector, Chassis Harness (EH Controls) ... 272
2 Speed Solenoid Connector, Chassis Harness (Manual Controls) ... 262
2002 Water Pump ... 92
2201 (THERMOSTAT) ... 94
2803 EXHAUST MANIFOLD ... 95
2901 VENTILATOR SYSTEM ... 96
3546 FUEL FILTER ... 98
3710 FUEL TRANSFER PUMP ... 100
4015 (ENGINE OIL DIPSTICK) (- 052105) ... 102
4016 Engine Oil Dipstick Tube (052106 -) ... 104
4315 STARTING AID ... 106
4402 Timing Gear Cover ... 108
4405 TIMING GEAR COVER ... 110
4501 BALANCER SHAFT ... 112
4610 CYLINDER BLOCK ... 114
4703 (CRANKSHAFT AND BEARINGS) ... 116
4814 CONNECTING RODS AND PISTONS ... 118
4907 ROCKER ARM ASSEMBLY ... 120
5001 OIL PUMP ... 122
5105 Cylinder Head ... 124
5204 AUXILIARY DRIVE ... 126
5907 OIL COOLER ... 127
6207 ALTERNATOR BRACKETS ... 128
6301 (REAR OIL SEAL) ... 129
6568 TURBOCHARGER ... 130
6699 TEMPERATURE SWITCH ... 132
6711 (SENSORS) ... 134
8408 ENGINE WIRING HARNESS ... 136
8701 BELT TENSIONER ... 137
8801 OIL FILTER ... 138
9804 LIFT STRAPS ... 139
9901 (ENGINE OVERHAUL KIT) ... 168
9901 (THRUST WASHER KIT) ... 165
9901 BEARINGS, .254MM UNDERSIZED ... 158
9901 BEARINGS, UNDERSIZED ... 152
9901 Camshaft Kit ... 166
9901 COMPLETE BLOCK ASSEMBLY ... 170
9901 CONNECTING ROD, BEARINGS ... 164
9901 CRANKSHAFT BEARING KIT ... 159
9901 CRANKSHAFT PULLEY KIT ... 154
9901 CYLINDER HEAD GASKET, OVERSIZED ... 155
9901 CYLINDER HEAD KIT ... 150
9901 ENGINE GASKET KIT ... 144
9901 ENGINE OVERHAUL KIT ... 140
9901 FOLLOWER, HYDRAULIC ... 167
9901 Gasket Kit ... 146
9901 Rear Oil Seal ... 162
9901 SEAL KIT - FUEL INJECTION PUMP ... 149
9901 SEAL KIT FOR PUMP AND INJECTOR NOZZLE ... 148
9901 SERVICE KIT CYLINDER HEAD BOLTS ... 157
9901 THERMOSTAT KIT ... 156
9901 TIMING GEAR COVER - SERVICE KIT ... 142
9902 PISTON RING KIT ... 153, 160

A

A/C Pressure Switch Harness (EH Controls) ... 272
A/C Pressure Switch Harness (Manual Controls) ... 262
Absorber, Seat Shock Absorber Kit, Mechanical Suspension Seat ... 658
Absorber, Shock Absorber, Air Suspension Seat Components (Cloth) (- 267546) ... 652
Absorber, Shock Absorber, Air Suspension Seat Components (Vinyl) (- 267546) ... 656
Absorber, Shock Absorber, Mechanical Suspension Seat ... 658
Accelerator, Throttle Kit, Engine Speed Control Pedal ... 208
Accelerator, Throttle Kit, Engine Speed Control Pedal Kit ... 210
Accessory ... 280
Accessory Relay ... 280
Accessory Relay (EH Controls) ... 272
Accessory Relay (Manual Controls) ... 262
Accumulator, Hydraulic (EH Controls) ... 440
Accumulator, Hydraulic (Manual Controls) ... 438
Accumulator, Hydraulic Accumulator, Hydraulic Accumulator (EH Controls) ... 440
Accumulator, Hydraulic Accumulator, Hydraulic Accumulator (Manual Controls) ... 438

Page

Acoustical Foam ... 704
Actuator, Electric Quik-Tatch™ ... 298
Actuator, Electric Quik-Tatch™ Wiring Harness and Actuator ... 298
Actuator, Heater Hoses ... 670
Actuator, HVAC Hoses ... 674
Aftercooler, Cooling Package (Heavy Duty) ... 186
Air Bag Kit, Air Suspension Seat (- 267546) ... 652
Air Bag Kit, Air Suspension Seat (Vinyl) (- 267546) ... 656
Air Cleaner ... 214
Air Compressor Connector, Chassis Harness (EH Controls) ... 272
Air Compressor Connector, Chassis Harness (Manual Controls) ... 262
Air Conditioner and Heater ... 280
Air Conditioner Switch ... 674
Air Conditioning Compressor ... 678
Air Conditioning Evaporator ... 676
Air Cooler, Charge (Heavy Duty Cooling Package) ... 186
Air Cooler, Charge (Standard Cooling Package) ... 184
Air Dryer, Air Conditioner ... 678
Air Filter, Cab Recirculation, EH Controls (- 269401) ... 680
Air Filter, Cab Recirculation, Manual Controls (- 269401) ... 682
Air Resticton (Manual Controls) ... 262
Air Restriction (EH Controls) ... 272
Air Seat Compressor Hose Kit (- 267546) ... 652
Air Seat Switch (- 267546) ... 652
Air Suspension Seat (Cloth) ... 650
Air Suspension Seat (Vinyl) ... 654
Air Suspension Seat Components (Cloth) (- 267546) ... 652
Air Suspension Seat Components (Vinyl) (- 267546) ... 656
Alarm Kit, Backup, Manual Controls ... 306
Alarm, Backup Kit, EH Controls ... 308
Alarm, Backup, Connector ... 252
Alarm, Cab Warning (EH Controls) ... 284
Alarm, Cab Warning (Manual Controls) ... 282
Alternator ... 250
ALTERNATOR BRACKET (6207) 4024HT011 ... 128
Alternator Diode, Chassis Harness (EH Controls) ... 272
Alternator Diode, Chassis Harness (Manual Controls) ... 262
Alternator, Alternator ... 250
Alternator, Alternator Reman, Alternator ... 250
Ambient Air Temp (EH Controls) ... 272
Ambient Air Temp (Manual Controls) ... 262
Anchor, Cab Wiring Harness (EH Controls) ... 284
Anchor, Main Wiring Harness (EH Controls) ... 270
Anchor, Main Wiring Harness (Manual Controls) ... 260
Anchor, Warning Beacon Kit ... 258
Antenna, Radio ... 310
Antenna, Radio, Antenna / Speaker Kit ... 312
Antenna, Radio, Antenna, Speakers and Wire Harness ... 310
Anti-Theft Decal ... 702
ARM ASSEMBLY, ROCKER (4907) ... 120
Arm, Rocker Arm Shaft, 4907 ROCKER ARM ASSEMBLY ... 120
Arm, Rocker Arm, 4907 ROCKER ARM ASSEMBLY ... 120
Arm, Steering Arm, Left Deluxe Control Lever (Hand and Foot Control System) ... 368
Arm, Steering Arm, Left Deluxe Control Lever (Hands Only Control System) ... 372
Arm, Steering Arm, Left Standard Control Lever (Hands and Foot Control System) ... 360
Arm, Steering Arm, Left Standard Control Lever (Hands Only Control System) ... 364
Arm, Steering Arm, Right Deluxe Control Lever (Hand and Foot Control System) ... 366
Arm, Steering Arm, Right Deluxe Control Lever (Hands Only Control System) ... 370
Arm, Steering Arm, Right Standard Control Lever (Hands and Foot Control System) ... 358
Arm, Steering Arm, Right Standard Control Lever (Hands Only Control System) ... 362
Arm, Wiper Arm, Cab Door (- 269401) ... 640
Arm, Wiper Arm, Severe Duty Door (- 269401) ... 642
Arm, Wiper Arm, Severe Duty Door Kit (- 269401) ... 644
Arm, Wiper Arm, Standard Duty Door Kit (- 269401) ... 612
Armrest, Interlocking Seat Bar ... 660
Attachment Control ... 380
Attachment Control Field Kit ... 380
Attachment Control Field Kit (Manual Controls) ... 290
Attachment Control Field Kit, EH Controls ... 292
Attachment Control Wiring Harness (EH Controls) ... 296
Attachment Control Wiring Harness (EH Controls, High Flow) ... 294
Attenuator, Hydraulic (EH Controls) ... 464
Attenuator, Hydraulic (Manual Controls) ... 466
Australian Compliance Decal, English ... 700
AUXILIARY DRIVE (4024HT011) ... 126
Auxiliary High Flow Plumbing ... 232

FREE VIEW - YOUFIXTHIS.COM

Download full manual at youfixthis.com

Primary Pictorial Index
Index d'illustrations principal
Índice primario de ilustraciones

TX1065389 A.2

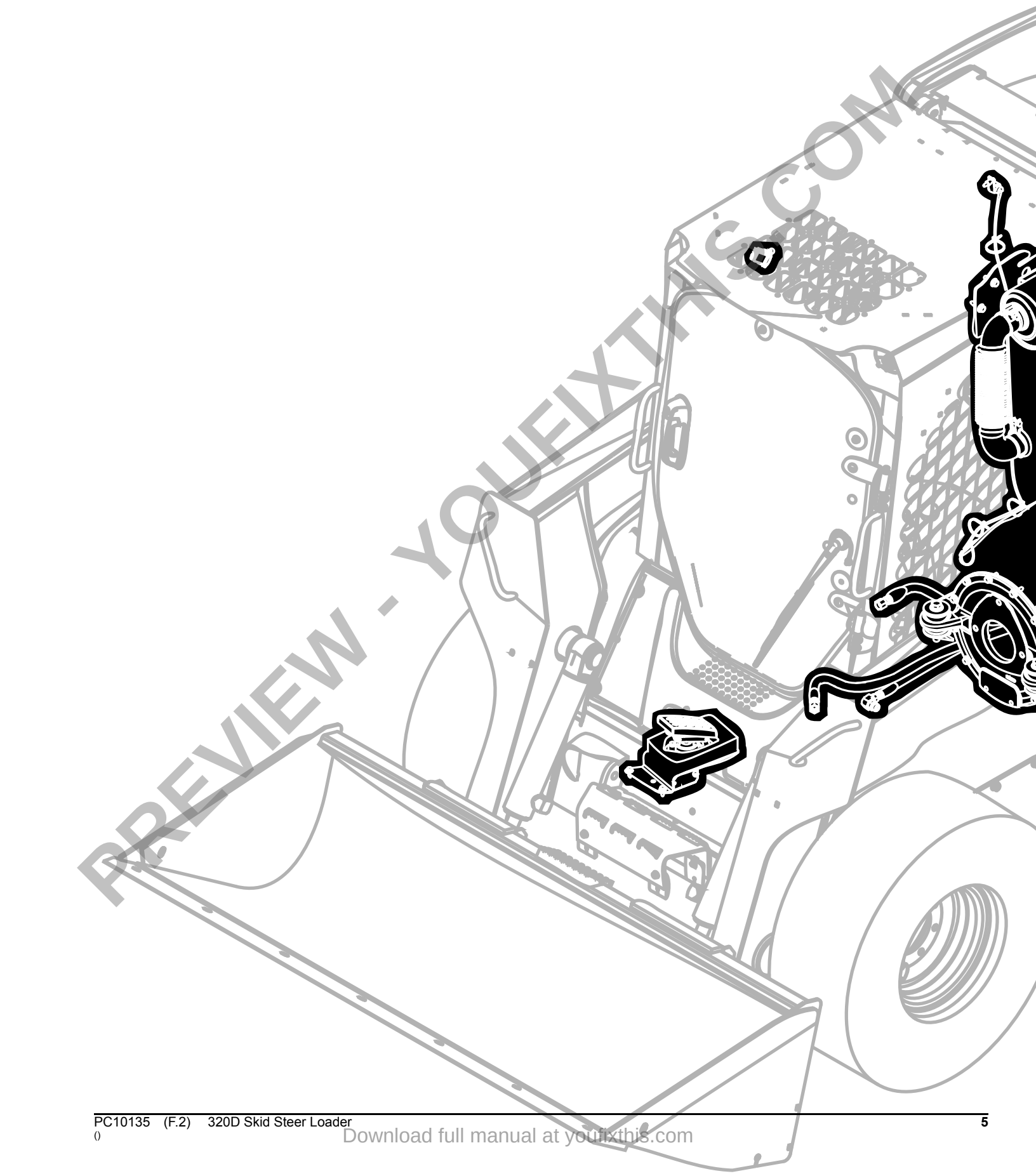

PREVIEW - YOUFIXTHIS.COM

Download full manual at youfixthis.com

Alphabetical Index - Continued

Page

Latch, Engine Door (Heavy Duty Louvered Grill) 578
Latch, Engine Door (With Standard Grill) 576
Latch, Latch Kit, Side Windows (- 269401) 634
Latch, Precleaner with Standard Grill 238
Latch, Severe Duty Door (- 269401) 642
Latch, Severe Duty Door Kit (- 269401) 644
Latch, Side Windows (- 269401) 634
Latch, Standard Duty Door Kit (- 269401) 612
Left Bucket Cylinder 548
Left Deluxe Control Lever (Hand and Foot Control System) 368
Left Deluxe Control Lever (Hands Only Control System) 372
Left Hydrostatic Drive Hydraulic (EH Controls) (Two Speed) 478
Left Hydrostatic Drive Hydraulics (EH Controls) (Single Speed) 474
Left Standard Control Lever (Hands and Foot Control System) 360
Left Standard Control Lever (Hands Only Control System) 364
Leveling Valve 508
Lever, Air Suspension Seat Components (Cloth) (- 267546) 652
Lever, Air Suspension Seat Components (Vinyl) (- 267546) 656
Lever, Cab Door (- 269401) 640
Lever, Control Lever, Centering Mechanism 352
Lever, Control Lever, Left Deluxe Control Lever (Hand and Foot Control System) 368
Lever, Control Lever, Left Deluxe Control Lever (Hands Only Control System) 372
Lever, Control Lever, Left Standard Control Lever (Hands and Foot Control System) 360
Lever, Control Lever, Left Standard Control Lever (Hands Only Control System) 364
Lever, Control Lever, Right Deluxe Control Lever (Hand and Foot Control System) 366
Lever, Control Lever, Right Deluxe Control Lever (Hands Only Control System) 370
Lever, Control Lever, Right Standard Control Lever (Hands and Foot Control System) 358
Lever, Control Lever, Right Standard Control Lever (Hands Only Control System) 362
Lever, Control, Deluxe Left (Hand and Foot Controls) 368
Lever, Control, Deluxe Left (Hands Onlly Controls) 372
Lever, Control, Deluxe Right (Hand and Foot Control) 366
Lever, Control, Deluxe Right (Hands Only Controls) 370
Lever, Control, Standard Left (Hand and Foot Controls) 360
Lever, Control, Standard Left (Hands Only Controls) 364
Lever, Control, Standard Right (Hand and Foot Controls) 358
Lever, Control, Standard Right (Hands Onlly Controls) 362
Lever, Lever Kit, Air Suspension Seat Components (Cloth) (- 267546) 652
Lever, Lever Kit, Air Suspension Seat Components (Vinyl) (- 267546) 656
Lever, Severe Duty Door (- 269401) 642
Lever, Severe Duty Door Kit (- 269401) 644
Lever, Standard Duty Door Kit (- 269401) 612
LIFT STRAPS (9804) 4024HT011 139
Lift, Single Point, Field Kit 554
Light Bulb Floodlamp , Lamp, Cab Wiring Harness (EH Controls) 284
Light Bulb Floodlamp , Lamp, Cab Wiring Harness (Manual Controls) 282
Light Bulb Floodlamp , Lamp, Dual Flashers 254
Light Bulb Floodlamp , Lamp, Dual Flashers Kit 256
Light Bulb Floodlamp , Tail Lamp, Work Lights 252
Light, Dome (EH Controls) 284
Light, Dome (Manual Controls) 282
Light, Rear 252
Lights 280
Lights and Switch, Work 252
Lights, Dual Flasher 254
LINE, TURBO (6568) 130
Lines, Brake (EH Controls) (Single Speed) 390
Lines, Brake (EH Controls) (Two Speed) 392
Lines, Brake (Manual Controls) (Single Speed) 386
Lines, Brake (Manual Controls) (Two Speed) 388
Lines, Hydrostatic Drive (Manual Controls) (Single Speed) 468
Lines, Hydrostatic Drive (Manual Controls) (Two Speed) 470
Lines, Hydrostatic Drive, LH (EH Controls) (Single Speed) 474
Lines, Hydrostatic Drive, LH (EH Controls) (Two Speed) 478
Lines, Hydrostatic Drive, RH (EH Controls) (Single Speed) 472
Lines, Hydrostatic Drive, RH (EH Controls) (Two Speed) 476
Lines, Loader Lowering Valve (EH Controls, Self Leveling) 530
Lines, Loader Lowering Valve (EH Controls, Standard) (- 194401) 528
Link, Lower Boom (179867 -) 584
Link, Lower Boom (SN-179866) (- 179866) 582
Link, Upper Boom (179867 -) 584
Link, Upper Boom (SN-179866) (- 179866) 582
Linkage, Boom (- 179866) 582

Page

Linkage, Boom (179867 -) 584
Linkage, Frame Covers and Boom Lock (EH Controls) 558
Linkage, Frame Covers and Boom Lock (Manual Controls) 556
Linkage, Loader Controls (Hands Only Controls) 376
Linkage, Loader Controls Linkage (Hands Only Controls) 376
Linkage, Pedals, Hand and Manual Foot Controls 374
Linkage, Steering (-192799) (- 192799) 354
Linkage, Steering (192800-) (192800 -) 356
Load Lowering Valve (EH Controls) (- 194401) 506
Load Lowering Valve Plumbing (EH Controls, Self Leveling) 530
Load Lowering Valve Plumbing (EH Controls, Standard) (- 194401) 528
Loader Boom (179867 -) 584
Loader Boom (SN-179866) (- 179866) 582
Loader Control Valve (EH Controls) 502
Loader Control Valve (Hand and Foot Controls) 494
Loader Control Valve (Hands Only Controls) 498
Loader Control Valve Components (EH Controls) 504
Loader Control Valve Components (Hand and Foot Controls) 496
Loader Control Valve Components (Hands Only Controls) 500
Loader Control Valve Harness (Manual Controls) 268
Loader Control Valve Harness (EH Controls) 278
Loader control Valve Harness Connectors and Terminals (EH Controls) 278
Loader Control Valve Harness Terminals and Connectors (Manual Connectors) 268
Loader Control Valve Wiring Harness (EH Controls) 270
Loader Control Valve Wiring Harness (Manual Controls) 260
Loader Controls Linkage (Hands Only Controls) 376
Loader Controls, Hand And Manual Foot Controls 374
Lock, Boom (EH Controls) 558
Lock, Boom (Manual Controls) 556
Lock, Engine Cover (With Heavy Duty Louvered Grill) 578
Lock, Engine Cover (With Standard Grill) 576
Lockout Solenoid, Auxiliary, Loader Control Valve (EH Controls) 504
Lockout Solenoid, Auxiliary, Loader Control Valve (Hand and Foot Controls) 496
Lockout Solenoid, Auxiliary, Loader Control Valve (Hands Only Controls) 500
Louver, Air Ducts, EH Controls (- 269401) 680
Louver, Air Ducts, Manual Controls (- 269401) 682
Louvered Grill, Heavy Duty 578
Low Sulfur Fuel Label 688, 690
Low Sulfur Fuel Label (English) (EH Controls) 692
Lower Boom Link (179867 -) 584
Lower Boom Link (SN-179866) (- 179866) 582
Lowering Valve (EH Controls) (-194401) (- 194401) 506
Lumbar Knob, Air Suspension Components (- 267546) 652
Lumbar Knob, Air Suspension Components (Vinyl) (- 267546) 656

M

MAIN BEARING CAPS (4610) 114
MAIN BEARING KIT, CRANKSHAFT (9901) 4024HT011 159
MAIN BEARING KIT, CRANKSHAFT, UNDERSIZED (9901) 4024HT011 152
MAIN BEARING, STD (4703) 116
Main Counterweight 562
Main Hydraulic Plumbing (EH Controls, With Bypass) (Single Speed) 460
Main Hydraulic Plumbing (EH Controls, With Bypass) (Two Speed) 462
Main Hydraulic Plumbing (EH Controls, Without Bypass) (Single Speed) 452
Main Hydraulic Plumbing (EH Controls, Without Bypass) (Two Speed) 454
Main Hydraulic Plumbing (Manual Controls, Without Bypass) (Single Speed) 448
Main Hydraulic Plumbing (Manual Controls, Without Bypass) (Two Speed) 450
Main Hydraulic Plumbing with Bypass, Manual Controls, Single Speed 456
Main Hydraulic Plumbing with Bypass, Manual Controls, Two Speed 458
Main Wiring Harness (EH Controls) 270
Main Wiring Harness (Manual Controls) 260
Main Wiring Harness Connectors (EH Controls) 272
Main Wiring Harness Connectors, Manual Controls 262
Manifold, Center Hydrostatic Pump (EH Controls) 422
Manifold, Center Hydrostatic Pump (Manual Controls) 414
MANIFOLD, EXHAUST (2803) 4024HT011 95
Manifold, Exhaust Manifold, 2803 EXHAUST MANIFOLD 95

PREVIEW - YOUFIXTHIS.COM

Download full manual at youfixthis.com

Key	Part No.	Part Name	Qty.	Engine Serial No.	Remarks
1	RE167207	Sensor	1		
2	RE46684	Fitting Plug	1		
3	51M7041	O-Ring	2		11.300 X 2.200 mm
4	RE48419	Sensor	1		TEMPERATURE
5	RE525016	Thermocouple	1		
6	RE519144	Sensor	2		MAGNETIC PICK-UP
7	51M7044	O-Ring	2		17.300 X 2.200 mm

PREVIEW - YOUFIXTHIS.COM

Download full manual at youfixthis.com

Standard Fan Drive Hydraulic Lines (With Bypass)
Conduites hydrauliques d'entraînement de ventilateur standard (avec by-pass)
Tuberías hidráulicas de mando de ventilador estándar (con derivación)

AT373115_TX1063625 B.2

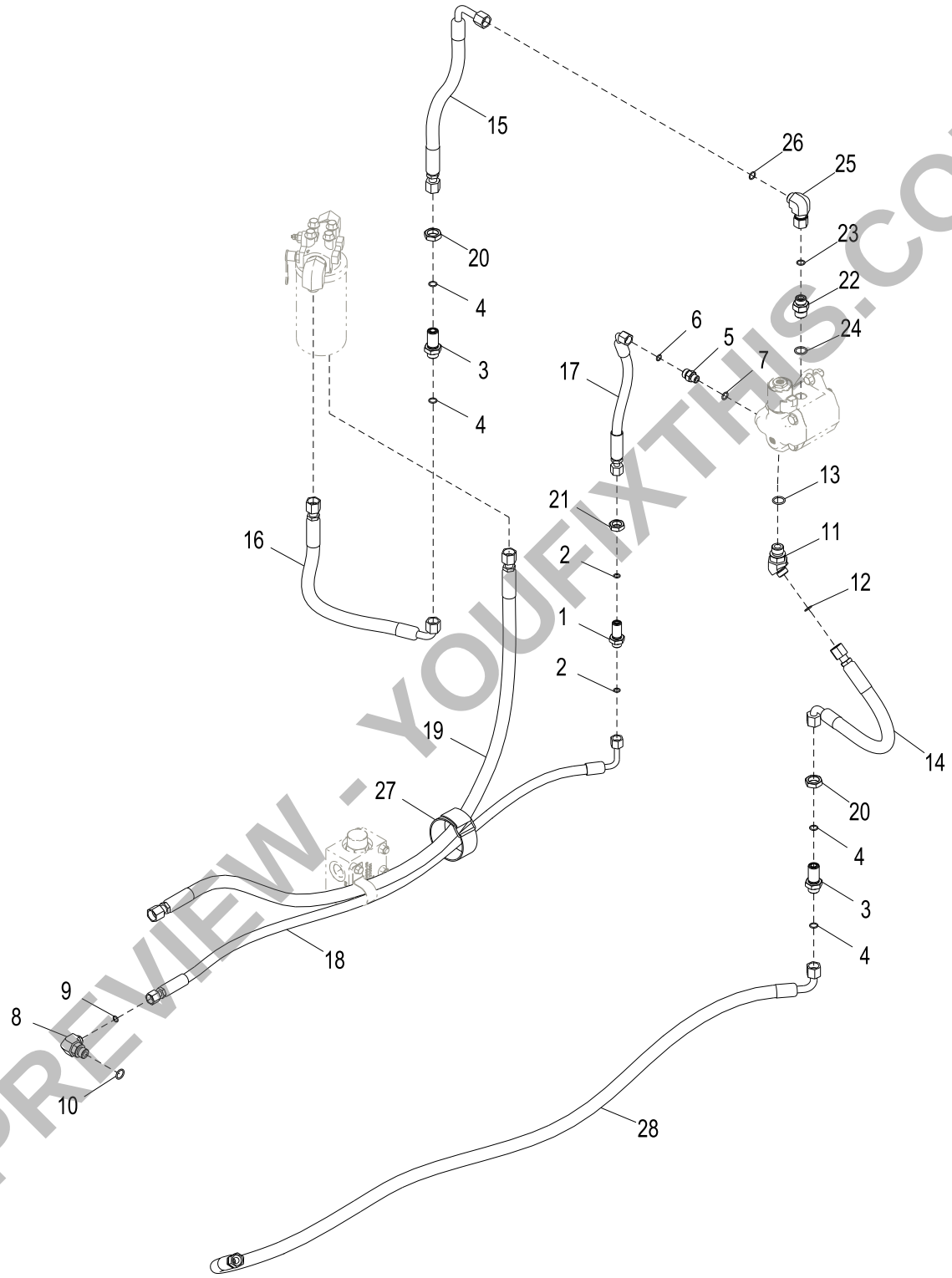

AT373115_TX1063625

PREVIEW - YOUFIXTHIS.COM

Download full manual at youfixthis.com

Fan Drive Harness (Manual Controls)
Faisceau d'entraînement de ventilateur (commandes manuelles)
Grupo de cables de mando de ventilador (controles manuales)

AT348459_TX1078746 A.1

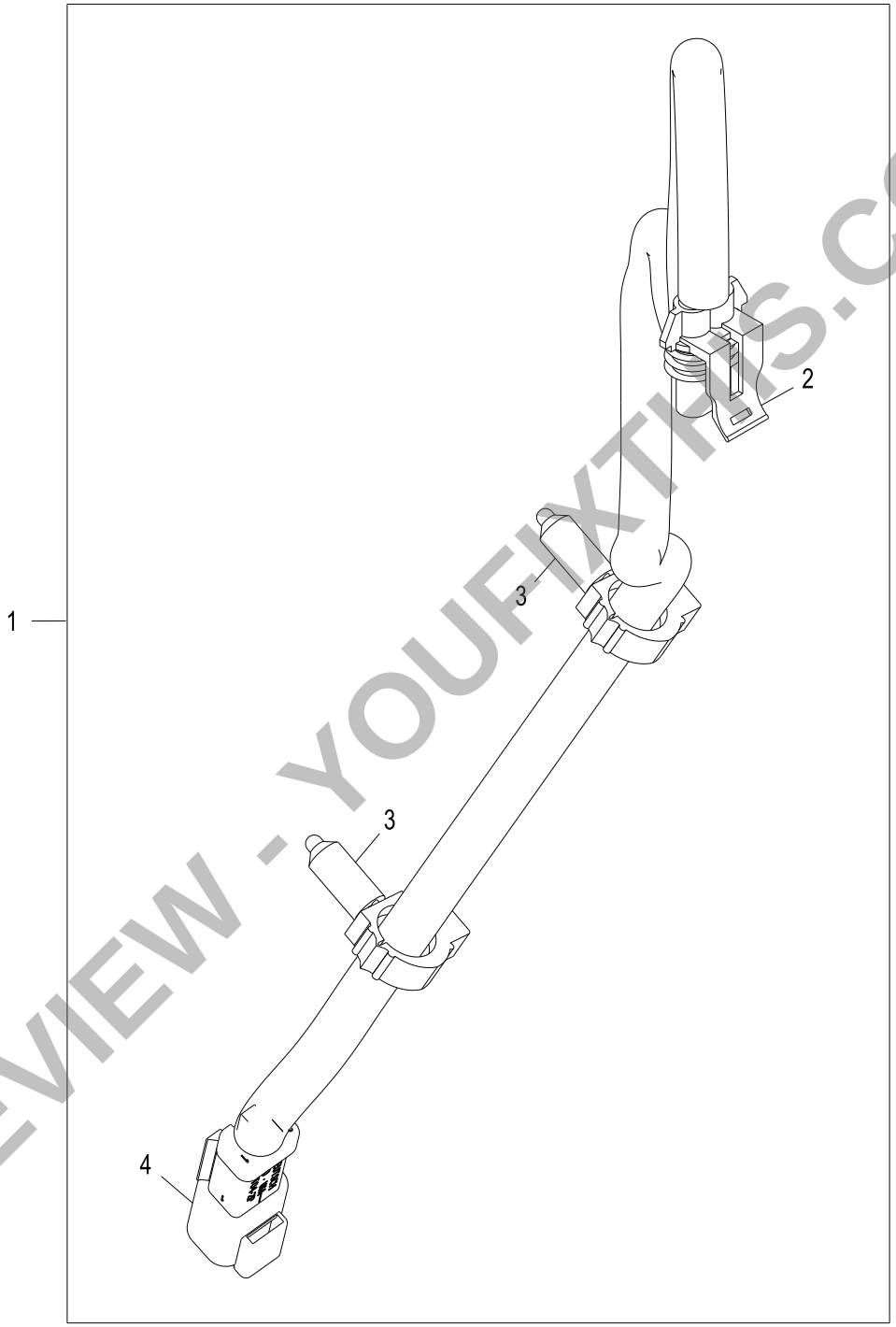

AT348459_TX1078746

PREVIEW - YOUFIXTHIS.COM

Download full manual at youfixthis.com

Key	Part No.	Part Name	Qty.	Serial No.	Remarks
1	**.....**	**Tire And Wheel Assembly**	**1**		**(AT336797 NLA) (WHOLE GOODS)**
2	T228267	Wheel	2		
3	KV12541	Tire Valve Stem	2		
4	AN132749	Tire Valve Stem	2		Inside
5	T228267	Wheel	2		
6	KV12541	Tire Valve Stem	2		
7	AN132749	Tire Valve Stem	2		Inside

PREVIEW - YOUFIXTHIS.COM

Download full manual at youfixthis.com

Sectional Pictorial Index
Index d'illustrations par sections.
Índice de ilustraciones por secciones

TX1066168 B.1

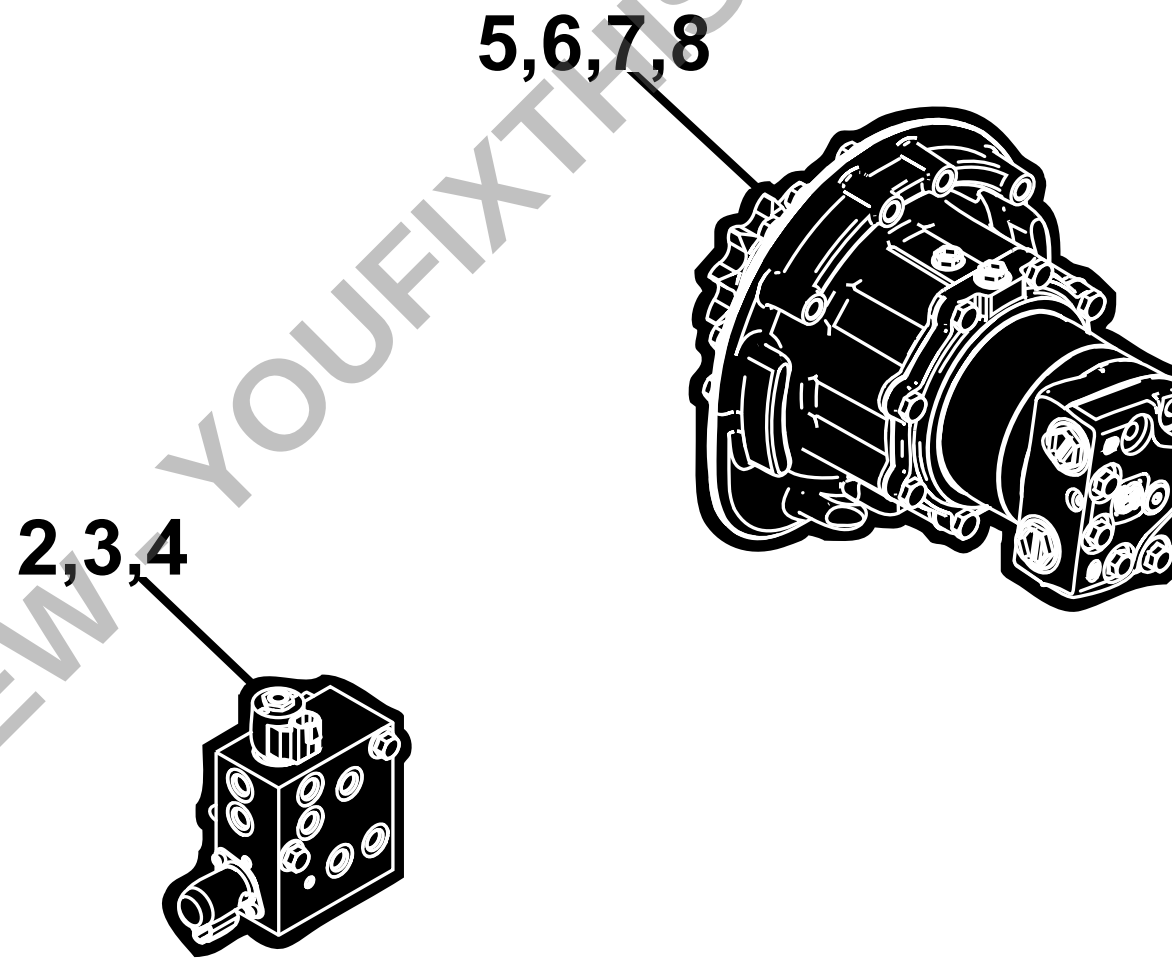

PREVIEW - YOUFIXTHIS.COM

Download full manual at youfixthis.com

Main Hydraulic Plumbing (EH Controls, With Bypass) (Two Speed)
Tuyauterie du circuit hydraulique principal (commandes EH, avec by-pass) (à deux vitesses)
Conjunto de tuberías hidráulicas principales (controles electrohidráulicos, con derivación) (dos velocidades)

AT386354_TX1082122 C.1

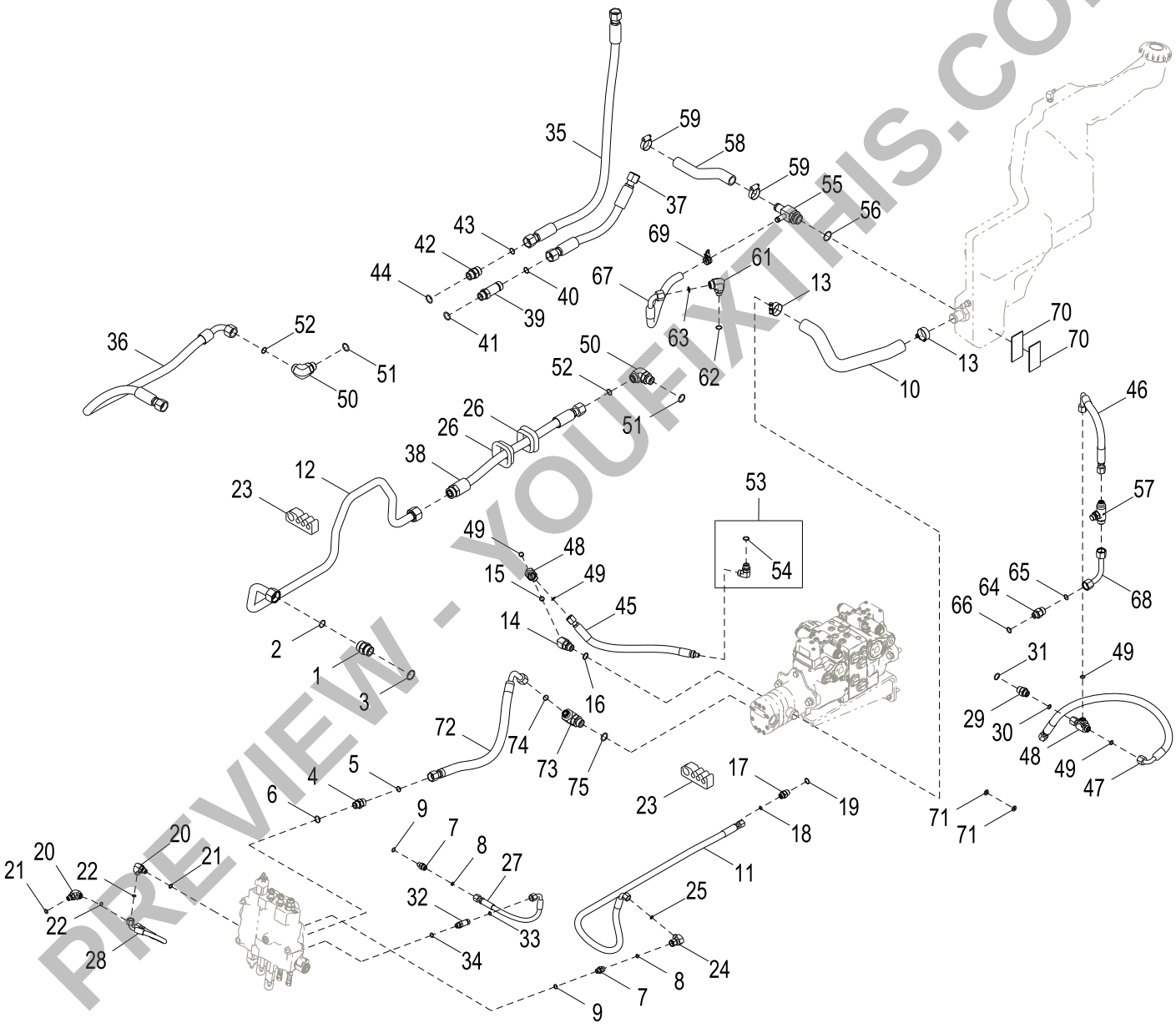

AT386354_TX1082122

PREVIEW - YOUFIXTHIS.COM

Download full manual at youfixthis.com

Load Lowering Valve Plumbing (EH Controls, Standard) (- 194401)
Tuyauterie de soupape d'abaissement de charge (commandes EH, standard) (- 194401)
Tuberías de válvula de descenso de carga (controles electrohidráulicos, estándar) (- 194401)

AT354522_TX1064542 A.1

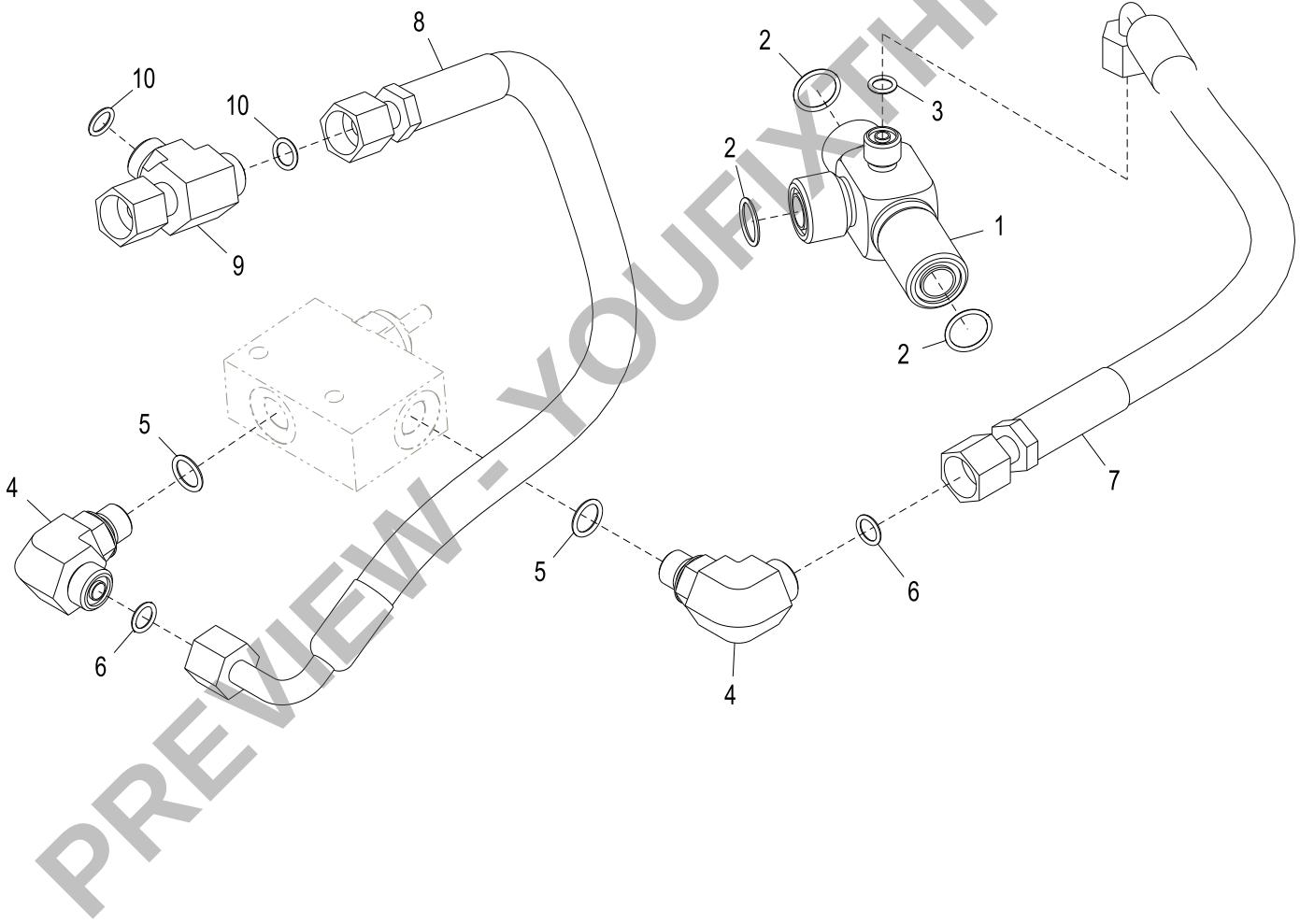

AT354522_TX1064542

PREVIEW - YOUFIXTHIS.COM

Download full manual at youfixthis.com

Sectional Pictorial Index
Index d'illustrations par sections.
Índice de ilustraciones por secciones

TX1065411 C.1

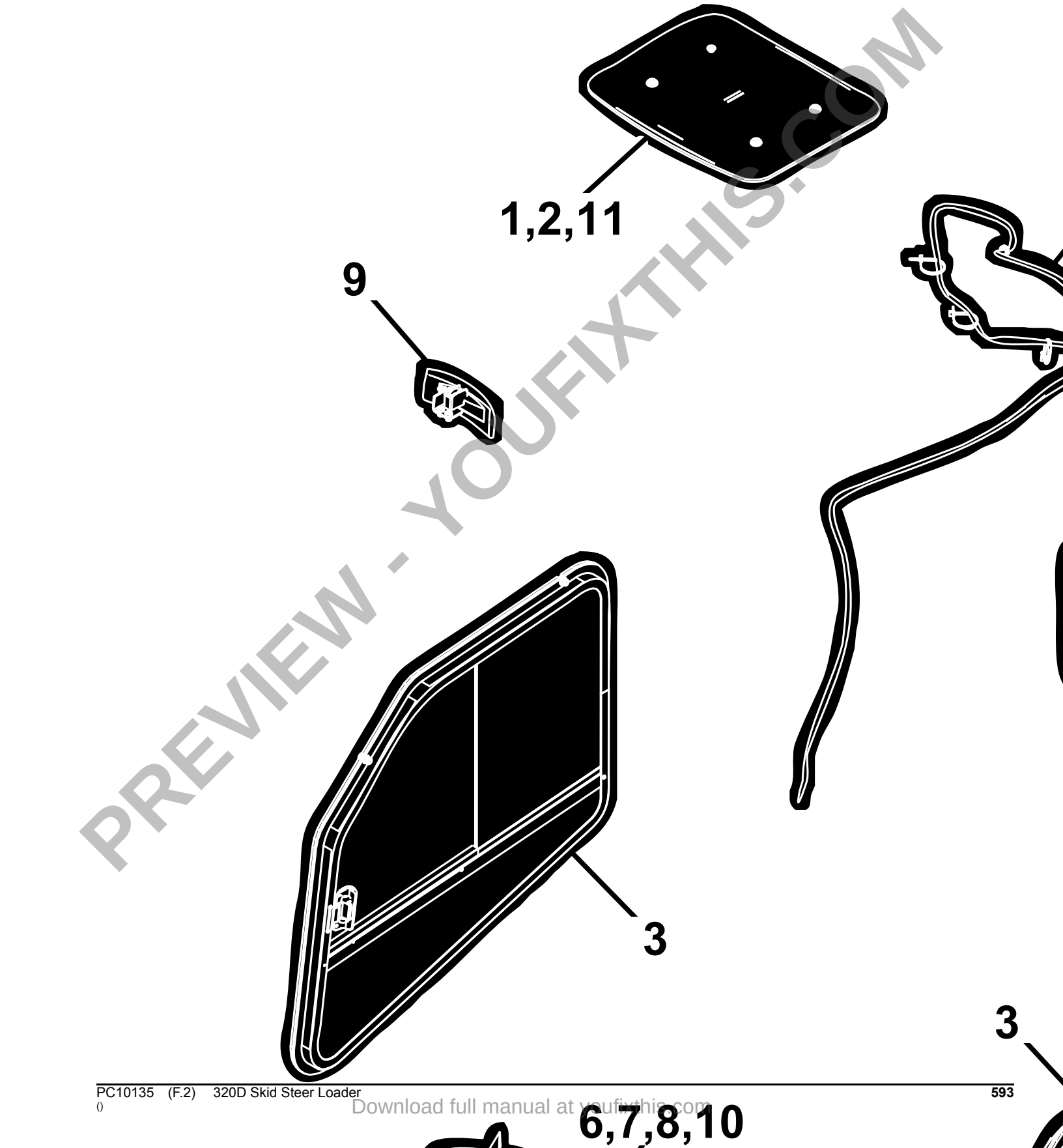

PREVIEW - YOUFIXTHIS.COM

Download full manual at youfixthis.com

Key	Part No.	Part Name	Qty.	Serial No.	Remarks
1	14M7396	Lock Nut	4		M8, Mechanical Suspension
2	24H1296	Washer	2		11/32" X 1-3/8" X 0.134"
3	AT361224	Seat	1		
4	AT315386	Seat Shock Absorber Kit	1		
5	.....	Shock Absorber	1		NSEP
6	.....	Bolt	2		NSEP
7	.....	Nut	2		NSEP
8	.....	Washer	1		NSEP
9	AT315387	Storage Compartment	1		Manual Holder
10	.....	Holder	1		NSEP
11	.....	Support	1		NSEP
12	AT365228	Seat Kit	1		Seat Cushion, Includes Seat Switch
	B32630	Spring Locking Pin	2		Not Illustrated
13	.....	Cushion	1		NSEP
14	.....	Cotter Pin	2		NSEP
15	.....	Spring	2		NSEP
16	AT365229	Seat Kit	1		Back Cushion
	B32630	Spring Locking Pin	2		Not Illustrated
17	.....	Cushion	1		NSEP
18	.....	Screw	2		NSEP
19	AT365230	Seat Kit	1		Skirt
	B32630	Spring Locking Pin	2		Not Illustrated
20	AT365231	Seat Kit	1		Slide
	B32630	Spring Locking Pin	2		Not Illustrated
21	.....	Slide Set	1		NSEP
22	.....	Slide Set	1		NSEP
23	.....	Nut	4		NSEP
24	.....	Bolt	2		NSEP
25	AT365232	Seat Kit	1		Knob and Handle
26	.....	Shaft	1		NSEP
27	.....	Thrust Bearing Race	2		NSEP
28	.....	Spring Pin	1		NSEP
29	.....	Nut	1		NSEP
30	.....	Handle	1		NSEP
31	.....	Guide	1		NSEP
32	H80440	Lock Nut	1		
33	KV20999	Strap	2		

PREVIEW - YOUFIXTHIS.COM

Download full manual at youfixthis.com

PREVIEW ONLY

You're viewing 25 of 728 pages

The full manual includes:

- All 728 pages, complete
- Searchable PDF (find any keyword)
- No watermarks
- Instant download
- Print-ready quality

GET FULL MANUAL NOW

John Deere 320D, 320D Skid Steer Parts Catalog

Scan or click anywhere
youfixthis.com

Click anywhere on this page to get the full manual