Table of contents

FOREWORD
TECHNICAL INFORMATION FEEDBACK FORM
Section 00 - GENERAL INFORMATION
Group 01 - Safety
Group 0003 - Torque Values
Section 01 - TRACKS
Group 0130 - Track System
Section 02 - AXLES, DIFFERENTIALS AND SUSPENSION SYSTEMS
Group 0250 - Axle Shaft, Bearings, and Reduction Gears
Group 0260 - Hydraulic System
Section 04 - ENGINE
Group 0400 - Removal and Installation
Section 05 - ENGINE AUXILIARY SYSTEM
Group 0510 - Cooling System
Group 0520 - Intake System
Group 0560 - External Fuel Supply System
Section 07 - DAMPENER DRIVE (FLEX COUPLING)
Group 0752 - Elements
Section 17 - FRAME OR SUPPORTING STRUCTURE
Group 1740 - Frame Installation
Group 1749 - Chassis Weights
Section 18 - OPERATOR′S STATION
Group 1800 - Removal and Installation
Group 1810 - Operator Enclosure
Group 1821 - Seat and Seat Belt
Group 1830 - Heating and Air Conditioning
Section 33 - EXCAVATOR
Group 3302 - Buckets
Group 3340 - Frames
Group 3360 - Hydraulic System
Section 43 - SWING OR PIVOTING SYSTEM
Group 4350 - Mechanical Drive Elements
Group 4360 - Hydraulic System
Section 99 - DEALER FABRICATED TOOLS
Group 9900 - Dealer Fabricated Tools

PREVIEW - YOUFIXTHIS.COM

Download full manual at youfixthis.com

Group 01 - Safety

Recognize Safety Information



Safety Alert Symbols



Safety Alert Symbols

This is the safety alert symbol. When this symbol is noticed on the machine or in this manual, be alert for the potential of personal injury.

Follow the precautions and safe operating practices highlighted by this symbol.

A signal word — DANGER, WARNING, or CAUTION — is used with the safety alert symbol. DANGER identifies the most serious hazards.

On the machine, DANGER signs are red in color, WARNING signs are orange, and CAUTION signs are yellow. DANGER and WARNING signs are located near specific hazards. General precautions are on CAUTION labels.

Follow Safety Instructions



Follow Safety Instructions

Read the safety messages in this manual and on the machine. Follow these warnings and instructions carefully. Review them frequently.

PREVIEW - YOUFIXTHIS.COM

Download full manual at youfixthis.com

Group 0003 - Torque Values

Metric Bolt and Cap Screw Torque Values

Metric Bolt and Cap Screw Torque Values

METRIC BOLT AND CAP SCREW TORQUE VALUES—Tolerance is ±10% unless otherwise specified

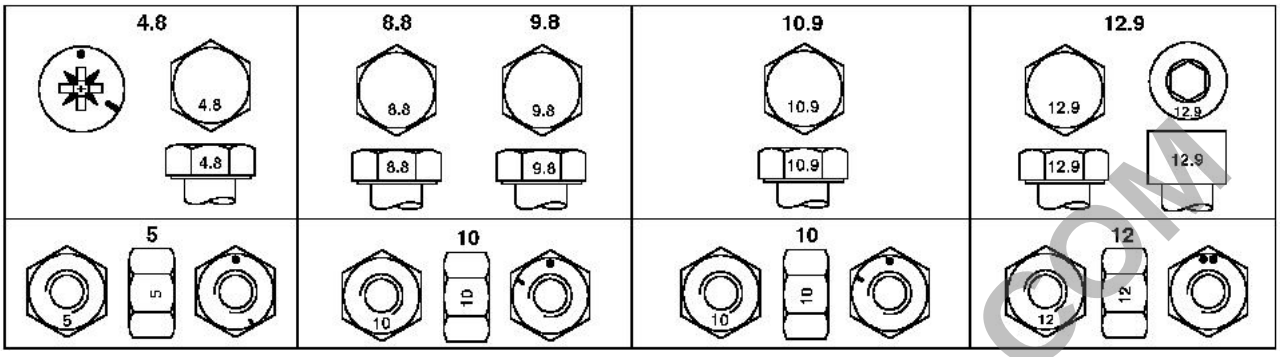

Top—Property Class and Head Markings; Bottom—Property Class and Nut Markings

	Class 4.8		Class 8.8 or 9.8		Class 10.9		Class 12.9	
Thread Size	**Lubricated [a] N˙m (lb-ft)**	**Dry [b] N˙m (lb-ft)**	**Lubricated [a] N˙m (lb-ft)**	**Dry [b] N˙m (lb-ft)**	**Lubricated [a] N˙m (lb-ft)**	**Dry [b] N˙m (lb-ft)**	**Lubricated [a] N˙m (lb-ft)**	**Dry [b] N˙m (lb-ft)**
M6	4.7 (3.5)	6 (4.4)	9 (6.6)	11.5 (8.5)	13 (9.5)	16.5 (12.2)	15.5 (11.5)	19.5 (14.5)
M8	11.5 (8.5)	14.5 (10.7)	22 (16)	28 (20.5)	32 (23.5)	40 (29.5)	37 (27.5)	47 (35)
M10	23 (17)	29 (21)	43 (32)	55 (40)	63 (46)	80 (59)	75 (55)	95 (70)
M12	40 (29.5)	50 (37)	75 (55)	95 (70)	110 (80)	140 (105)	130 (95)	165 (120)
M14	63 (46)	80 (59)	120 (88)	150 (110)	175 (130)	220 (165)	205 (150)	260 (190)
M16	100 (74)	125 (92)	190 (140)	240 (175)	275 (200)	350 (255)	320 (235)	400 (300)
M18	135 (100)	170 (125)	265 (195)	330 (245)	375 (275)	475 (350)	440 (325)	560 (410)
M20	190 (140)	245 (180)	375 (275)	475 (350)	530 (390)	675 (500)	625 (460)	790 (580)
M22	265 (195)	330 (245)	510 (375)	650 (480)	725 (535)	920 (680)	850 (625)	1080 (800)
M24	330 (245)	425 (315)	650 (480)	820 (600)	920 (680)	1150 (850)	1080 (800)	1350 (1000)
M27	490 (360)	625 (460)	950 (700)	1200 (885)	1350 (1000)	1700 (1250)	1580 (1160)	2000 (1475)
M30	660 (490)	850 (625)	1290 (950)	1630 (1200)	1850 (1350)	2300 (1700)	2140 (1580)	2700 (2000)
M33	900 (665)	1150 (850)	1750 (1300)	2200 (1625)	2500 (1850)	3150 (2325)	2900 (2150)	3700 (2730)
M36	1150 (850)	1450 (1075)	2250 (1650)	2850 (2100)	3200 (2350)	4050 (3000)	3750 (2770)	4750 (3500)

[a] "Lubricated" means coated with a lubricant such as engine oil, or fasteners with phosphate and oil coatings.

[b] "Dry" means plain or zinc plated without any lubrication.

Metric Bolt and Cap Screw Torque Value Instructions

CAUTION:
Use only metric tools on metric hardware. Other tools may not fit properly. Tool may slip and cause injury.
DO NOT use these values if a different torque value or tightening procedure is given for a specific application. Torque values listed are for general use only. Check tightness of fasteners periodically.
Shear bolts are designed to fail under predetermined loads. Always replace shear bolts with identical property class.

Fasteners should be replaced with the same or higher property class. If higher property class fasteners are used, these should only be tightened to the strength of the original.
Make sure fastener threads are clean and that you properly start thread engagement. This will prevent them from failing when tightening.
Tighten plastic insert or crimped steel-type lock nuts to approximately 50 percent of the dry torque shown in the chart, applied to the nut, not to the bolt head.
Tighten toothed or serrated-type lock nuts to the full torque value.

PREVIEW - YOUFIXTHIS.COM

Download full manual at youfixthis.com

Track Chain Disassemble and Assemble

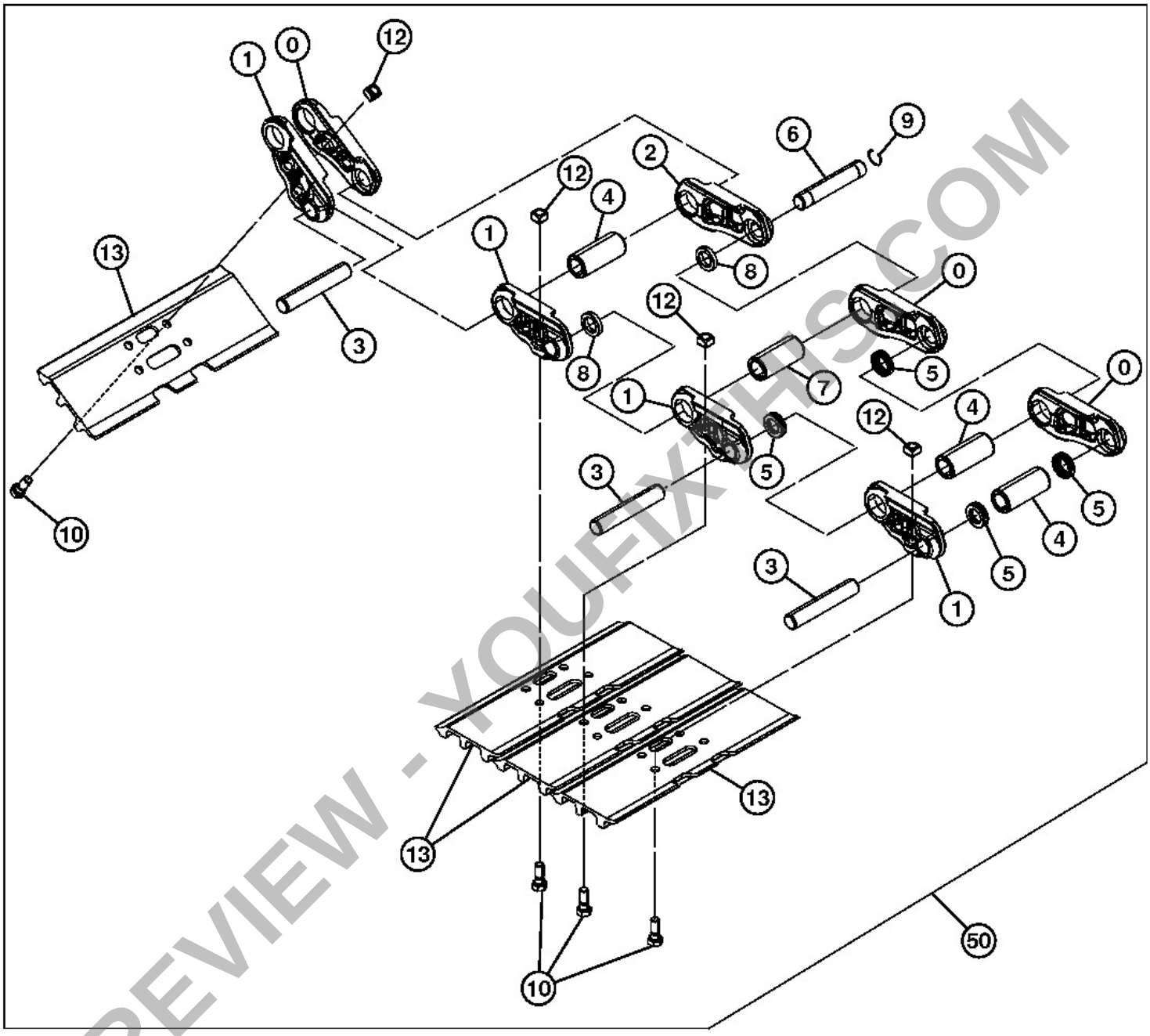

TX1002404

350DLC Track Chain Assembly

LEGEND:

0	Right Track Link (47 used)
1	Left Track Link (48 used)
2	Track Link

PREVIEW - YOUFIXTHIS.COM

Download full manual at youfixthis.com

Group 0130 - Track System

Track Roller Remove and Install

[1] - Swing upperstructure 90° and lower bucket to raise track off ground. Keep angle between boom and arm 90—110° and position round side of bucket on ground.

[2] -

CAUTION:

Prevent possible injury from unexpected machine movement. Position shop stands under frame to support machine while removing lower track roller.

Item	Measurement	Specification
Excavator	Weight (Approximate)	36 832 kg 81 200 lb

Put shop stands under machine.

[3] -

CAUTION:

Prevent possible injury from high pressure grease. Do not remove grease fitting (A) from valve (B).

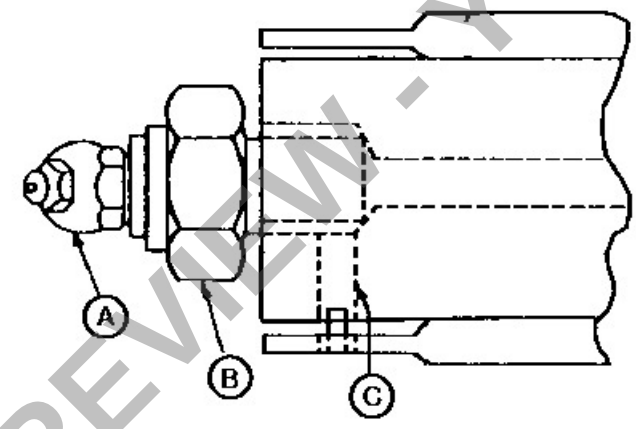

Grease Fitting

LEGEND:

A	Grease Fitting
B	Valve
C	Bleed Hole

Loosen valve (B) one to two turns to release grease through bleed hole (C).

[4] -

PREVIEW - YOUFIXTHIS.COM

Download full manual at youfixthis.com

Arm Cylinder Disassemble and Assemble

Specifications

SPECIFICATIONS	
Arm Cylinder Weight (approximate)	470 kg 1040 lb.
Arm Cylinder Piston Nut Torque	21 150 N·m 15,600 lb.-ft.
Arm Cylinder Rod Curvature	0.5 mm per 1 m 0.020 in. per 3.25 ft.
Arm Cylinder Piston Nut Torque	21 150 N·m 15,600 lb.-ft.
Set Screw Torque	96 N·m 71 lb.-ft.
Arm Cylinder Head-to-Barrel Cap Screw Torque	367 N·m 270 lb.-ft.

Service Equipment and Tools

SERVICE EQUIPMENT AND TOOLS
JT30043 Cylinder Service Stand
JT30043 Cylinder Service Stand
ST3276 Hex Piston Nut Wrench
ST8022 Installer
ST2970 Adjustment Tool
ST2211 Adjustment Tool
JT30043 Cylinder Service Stand
ST3276 Hex Piston Nut Wrench

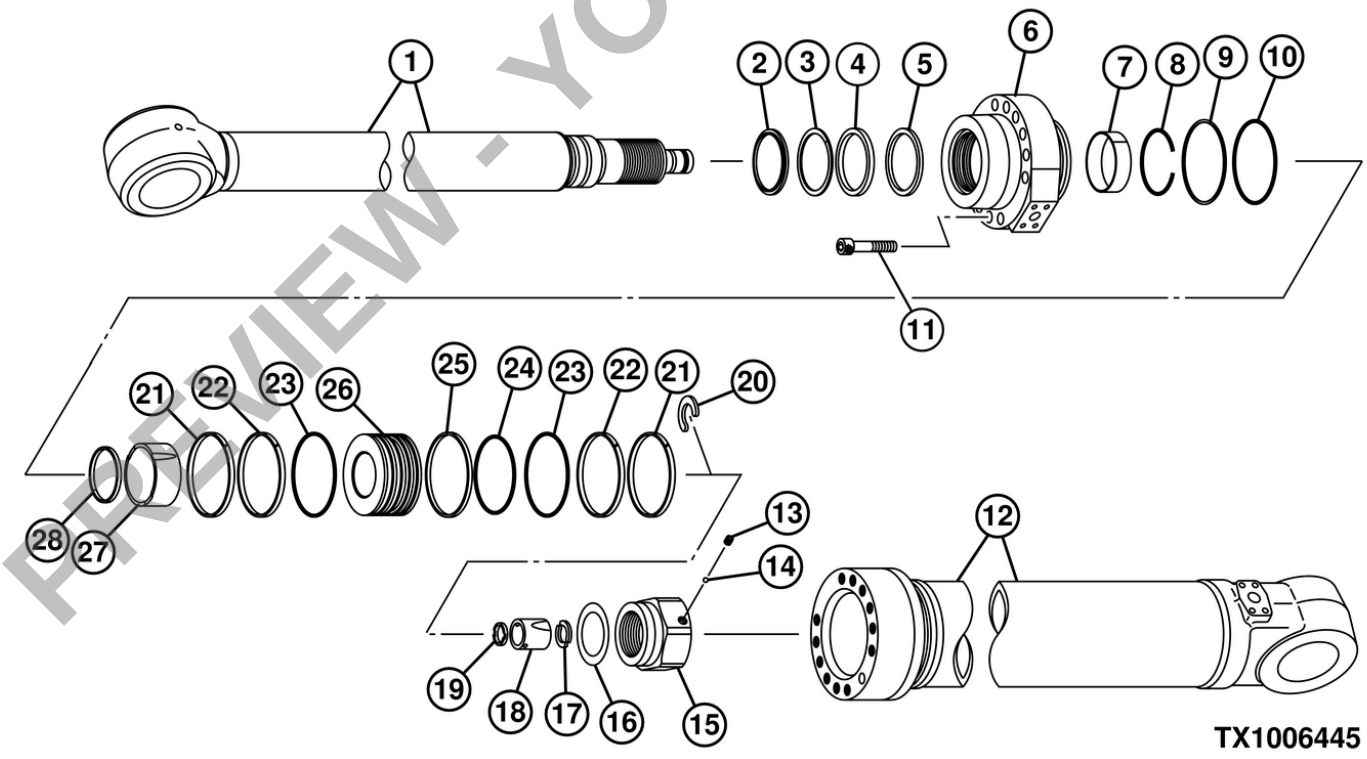

Arm Cylinder Components

LEGEND:

1	Rod
2	Dust Wiper
3	Backup Ring
4	U-Ring

PREVIEW - YOUFIXTHIS.COM

Download full manual at youfixthis.com

Foreword

This manual is written for an experienced technician. Essential tools required in performing certain service work are identified in this manual and are recommended for use.

Live with safety: Read the safety messages in the introduction of this manual and the cautions presented throughout the text of the manual.



CAUTION:

This is the safety-alert symbol. When you see this symbol on the machine or in this manual, be alert to the potential for personal injury.

Technical manuals are divided in two parts: repair and operation and tests. Repair sections tell how to repair the components. Operation and tests sections help you identify the majority of routine failures quickly.

Information is organized in groups for the various components requiring service instruction. At the beginning of each group are summary listings of all applicable essential tools, service equipment and tools, other materials needed to do the job, service parts kits, specifications, wear tolerances, and torque values.

Technical Manuals are concise guides for specific machines. They are on-the-job guides containing only the vital information needed for diagnosis, analysis, testing, and repair.

Fundamental service information is available from other sources covering basic theory of operation, fundamentals of troubleshooting, general maintenance, and basic type of failures and their causes.

PREVIEW - YOUFIXTHIS.COM

Download full manual at youfixthis.com

CAUTION:

Heavy component; use appropriate lifting device.

Item	Measurement	Specification
Track Roller	Weight	57 kg
		126 lb

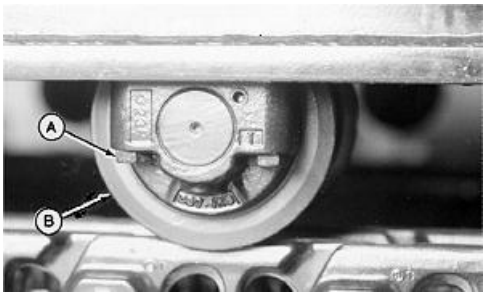

LEGEND:

A	Cap Screw (4 used)
B	Track Roller

Track Roller

Attach appropriate lifting device to track roller (B). Remove cap screws (A) and track roller (B).

[5] - Measure track roller tread diameter. See 350DLC Track Roller Tread Diameter . (SP326 Undercarriage Appraisal Manual.)

[6] - Repair or replace parts as necessary. See Track Roller Disassemble and Assemble . (See procedure in this group.)

[7] - Install track roller and tighten cap screws to specification.

Item	Measurement	Specification
Roller-to-Frame Cap Screw	Torque	840 N·m
		620 lb-ft

[8] - If equipped, install track roller guard and tighten cap screws to specification.

Item	Measurement	Specification
Track Roller Guard Cap Screw	Torque	670 N·m
		494 lb-ft

[9] - Tighten valve on track adjuster to specification.

Item	Measurement	Specification
Track Adjuster Valve	Torque	88 N·m
		55 lb-ft

[10] - Perform Check and Adjust Track Sag . (Operator´s Manual.)

PREVIEW - YOUFIXTHIS.COM

Download full manual at youfixthis.com

Service Recommendations For Non-Restricted Banjo (Adjustable) Fittings

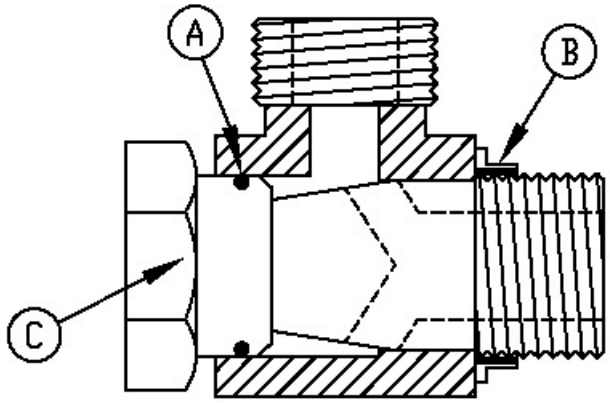

T11394B

Non-Restricted Banjo Fitting

[1] - Inspect all fitting sealing surfaces. They must be free of dirt and defects.

[2] - Inspect O-ring (A). It must be free of damage or defects.

[3] - Inspect sealing ring (B) for damage or defects.

[4] - Hold body in desired position while tightening stud by hand.

[5] - Tighten stud (C) to torque value shown on the chart. Do not allow body to twist when tightening stud.

→NOTE:

The L in the Tube Fitting OD Size column indicates “light” designed fitting and the S indicates “heavy” designed fitting.

Torque Value—Metric

	Torque Value		
Tube Fitting O.D. Size	**Metric Thread**	**N˙m**	**lb-ft**
6 L	M 10 x 1	30	22
8 L	M 12 x 1.5	40	30
10 L	M 14 x 1.5	60	44
12 L	M 16 x 1.5	100	74
15 L	M 18 x 1.5	130	96

PREVIEW - YOUFIXTHIS.COM

Download full manual at youfixthis.com

Section 02 - AXLES, DIFFERENTIALS AND SUSPENSION SYSTEMS

Table of contents

Group 0250 - Axle Shaft, Bearings, and Reduction Gears 1
Travel Gearbox Remove and Install 1
Travel Gearbox Disassemble and Assemble 4
Group 0260 - Hydraulic System 11
Travel Motor and Park Brake Remove and Install 11
Travel Motor and Park Brake Disassemble and Assemble 21
Travel Motor Cover Disassemble and Assemble 25
Travel Motor Start-Up Procedure 26

PREVIEW - YOUFIXTHIS.COM

Download full manual at youfixthis.com

Section 05 - ENGINE AUXILIARY SYSTEM

Table of contents

Group 0510 - Cooling System 1
Radiator Remove and Install 1
Oil Cooler Remove and Install 6
Charge Air Cooler Remove and Install 10
Fan Drive Motor Remove and Install 12
Fan, Fan Guard, and Fan Shroud Remove and Install 15
Serpentine Belt Remove and Install 17
Coolant Surge Tank Remove and Install 19
Fan Drive Pump Remove and Install 20
Fan Speed Solenoid Valve Remove and Install 22
Group 0520 - Intake System 24
Air Cleaner Remove and Install 24
Group 0560 - External Fuel Supply System 26
Fuel Tank Remove and Install 26
Primary Fuel Filter (Water Separator) Remove and Install 29
Final Fuel Filter Remove and Install 31

PREVIEW - YOUFIXTHIS.COM

Download full manual at youfixthis.com

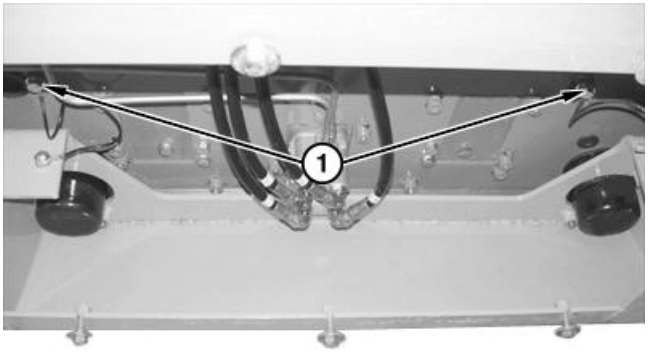

Behind Cab Wiring

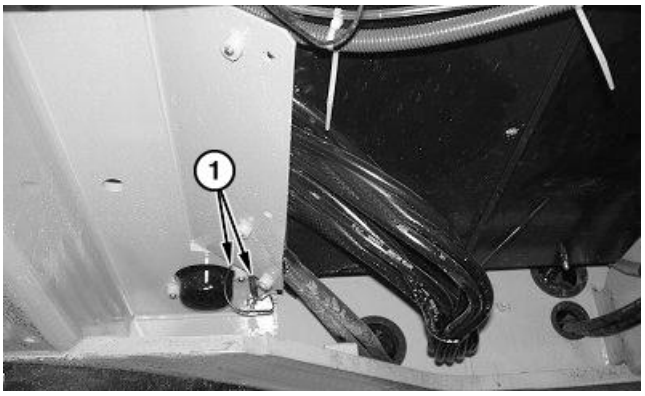

Under Cab Wiring

Disconnect electrical connectors (1).

[4] - Disconnect windshield washer hose (2).

[5] -

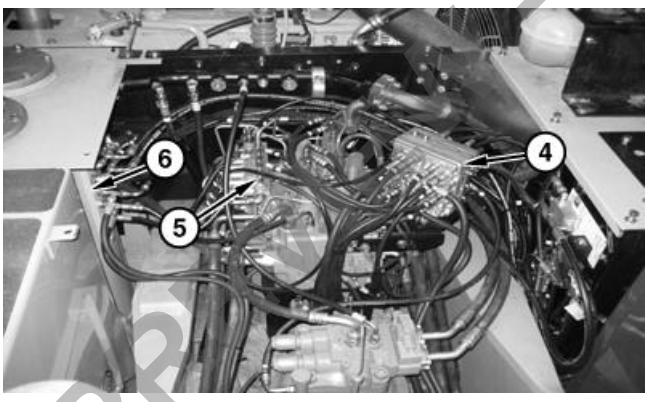

LEGEND:

4	Pilot Signal Manifold
5	Solenoid Valve Manifold
6	Hydraulic Tank

Hydraulic Hose Connections

Disconnect hydraulic hoses from pilot signal manifold (4), solenoid valve manifold (5), and hydraulic tank (6). See Pilot Control Valve-to-Manifold Component Location—Excavator Pattern . (Group 9025-15.) and Travel Hydraulic System Line Connection . (Group 9025-15.) Cap and tag all hoses and remove tie bands as necessary.

[6] - Recover refrigerant from air conditioning system. See Recover R134a Refrigerant . (Group 1830.)

[7] - Disconnect heater hoses from engine and air conditioner lines from receiver-dryer and air conditioning compressor. See Heater and Air Conditioner Component Location . (Group 9031-15.).

PREVIEW - YOUFIXTHIS.COM

Download full manual at youfixthis.com

	3.9 in.
10	578 mm
	22.8 in.
11	90 mm
	3.5 in.
12	581 mm
	22.9 in.
13	420 mm
	16.5 in.
14	100 mm
	3.9 in.
15	45 °
16	0 °
17	600 mm
	23.6 in.

PREVIEW - YOUFIXTHIS.COM

Download full manual at youfixthis.com

Number	Name	Use
• PM37418 (us) • PM37418 (canadian) • 242 LOCTITE ™ (loctite)	Thread Lock and Sealer (Medium Strength)	Apply to threads of pin-to-servo piston set screw.

[25] - Remove pin (30) from cover (31).

[26] - Remove servo piston (42) from cover (31).

[27] - Do Pump 1 and 2 Inspection . (See procedure in this group.)

[28] -

IMPORTANT:

Ensure that all components are clean during assembly to prevent hydraulic system contamination.

Install servo piston (42) and pin (30) into cover (31).

[29] - Clean threads of set screw (41) using PM37509 Cure Primer and apply PM37418 Thread Lock and Sealer (medium strength) to threads.

Number	Name	Use
• PM37509 (us) • PM38611 (canadian) • 7649 LOCTITE ™ (loctite)	Cure Primer	To speed cure time of adhesives and sealants.
• PM37418 (us) • PM37418 (canadian) • 242 LOCTITE ™ (loctite)	Thread Lock and Sealer (Medium Strength)	Apply to threads of pin-to-servo piston set screw.

[30] - Tighten set screw (41) and secure pin (30) to servo piston (42).

Item	Measurement	Specification
Servo Piston Set Screw	Torque	24.5 N·m 217 lb-in.

[31] - Install O-ring (36) into stop (35).

[32] - Install O-rings (12) into cover (31).

[33] - Install stop (35).

[34] - Install lock washers (33) and socket head cap screws (34). Tighten socket head cap screws.

Item	Measurement	Specification
Stop-to-Cover Socket Head Cap Screw	Torque	30 N·m 22 lb-ft

[35] -

PREVIEW - YOUFIXTHIS.COM

Download full manual at youfixthis.com

Item	Measurement	Specification
Cover-to-Holder Cap Screw	Torque	5 N˙m 44.3 lb-in.

[17] - Apply multi-purpose grease to spring pin (27).

PREVIEW - YOUFIXTHIS.COM

Download full manual at youfixthis.com

[14] -

IMPORTANT:

Note direction of oil groove in cushion bearing (23) and notch in cushion seal (24) for installation.

Remove cushion bearing (23) and cushion seal (24) from rod (1).

[15] - Remove components (17—21) from piston (22).

[16] - Remove cylinder head (6) from rod (1).

[17] -

IMPORTANT:

Note direction of dust wiper (2) and U-ring (4) for installation.

Remove components (2—5) and (7—10) from cylinder head (6).

[18] - Inspect dust seals and bushings in rod (1) and barrel (12) for wear or damage. Repair or replace parts as necessary. See Inspect Pins, Bushings and Bosses—Front Attachment . (Group 3340.)

[19] - Check for rod curvature on V-blocks using dial indicator.

Item	Measurement	Specification
Boom Rod	Curvature	0.5 mm per 1 m
		0.020 in. per 3.25 ft

[20] - Repair or replace parts as necessary.

[21] - Install bushing (7) into cylinder head (6) using a driver disk and a press. Press to bottom of bore.

[22] - Install snap ring (8).

[23] - Install backup ring (9) and O-ring (10).

[24] - Install buffer ring (5).

[25] - Install U-ring (4) with lip towards bushing (7).

[26] - Install backup ring (3).

[27] - Install dust wiper (2) with lip towards outside of cylinder.

[28] - Install assembled cylinder head (6) on rod (1).

[29] - Install O-ring (20) and seal ring (21) to piston (22) using ST8027 Installer. Adjust seal ring (21) using ST2979 and ST2310 Adjustment Tool.

PREVIEW - YOUFIXTHIS.COM

Download full manual at youfixthis.com

Swing Bearing Cross Section

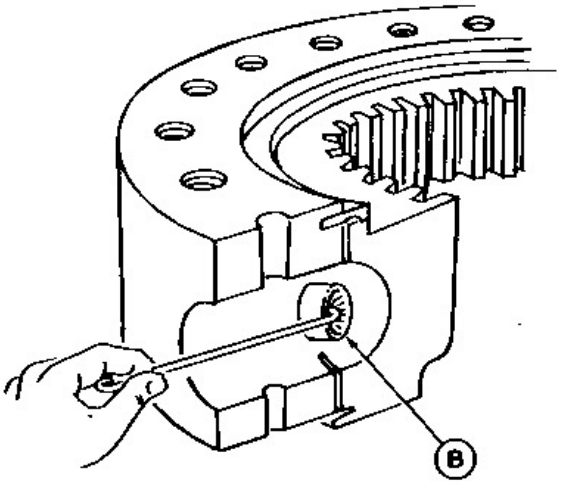

Swing Bearing Cross Section

Remove steel balls (A) and spacers (B).

[6] - Turn inner race to remove remaining steel balls and spacers.

[7] - Lift outer race off inner race.

[8] - Replace parts as necessary.

[9] - Install spacers (B) and steel balls (A).Turn inner race as needed to install spacers and steel balls.

[10] -

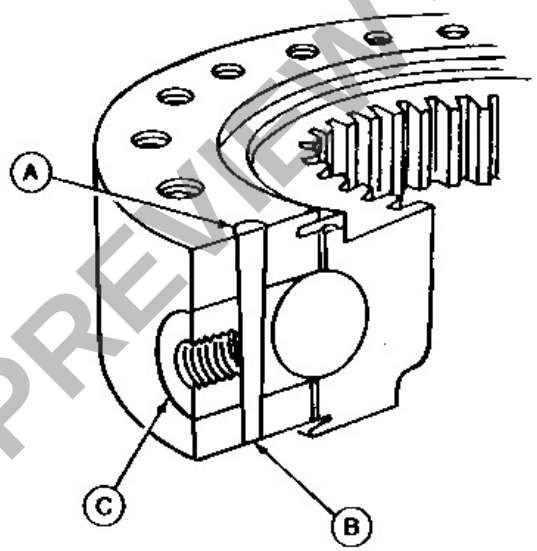

LEGEND:

A	Tack Weld
B	Taper Pin
C	Loading Plug

Swing Bearing Plug

Install loading plug (C).

[11] - Install taper pin (B) even with top of swing bearing.

PREVIEW - YOUFIXTHIS.COM

Download full manual at youfixthis.com

PREVIEW ONLY

You're viewing 17 of 443 pages

The full manual includes:

- All 443 pages, complete
- Searchable PDF (find any keyword)
- No watermarks
- Instant download
- Print-ready quality

GET FULL MANUAL NOW

John Deere 350DLC Repair Manual

Scan or click anywhere
youfixthis.com

Click anywhere on this page to get the full manual