VEHICLE SPECIFICATIONS

ENGINE

Make	Yanmar
Type	Diesel
Model	2V78
Horsepower (SAEJ1940)	13.4 kW (18 hp)
Cylinders	2, V-twin
Displacement	749 cc(46 cu in.)
Stroke/Cycle	4 Cycle
Bore	78 mm (3.07 in.)
Stroke	78.4 mm (3.09 in.)
Compression Ratio	22:1
Slow Idle	1000 ± 50 rpm
Valves	Overhead
Lubrication	Pressurized
Oil Filter	Full Flow Filter
Cooling System	Liquid Cooled
Coolant Capacity	3.6 L (3.8 U.S. qt)
Air Cleaner	Paper, Dry-type with Primary and Secondary Elements
Muffler	Horizontal discharge below frame
Engine Oil Capacity	
With Filter	2.27 L (2.4 U.S. qt)
Without Filter	2.08 L (2.2 U.S. qt)

FUEL SYSTEM

Fuel Tank Location	Rear
Fuel Tank Capacity (Total)	14.4 L (3.8 U.S. gal)
Fuel (min. octane)	Diesel, No. 1 or No. 2
Fuel Pump Location	Left Side Frame Rail - Under Hood
Fuel Pump Type	In-line with Electric Shutoff
Fuel Delivery	Indirect Injection
Fuel Shut-Off	Injection Pump
Fuel Filter	Replaceable, In-line
Fuel Gauge	Translucent Fuel Tank

PREVIEW - YOUFIXTHIS.COM

Download full manual at youfixthis.com

DIESEL ENGINE COOLANT – EUROPE

The engine cooling system when filled with a proper dilution mixture of anti-freeze and deionized or distilled water provides year-round protection against corrosion, cylinder liner pitting, and winter freeze protection down to –37°C (–34°F).

The following John Deere coolant is **PREFERRED:**

- **COOL–GARD COOLANT CONCENTRATE™.**

If above preferred coolant is not available, use any Automobile and Light Duty Engine Service **ethylene glycol base coolant**, meeting the following specification:

- ASTM D3306 (JDM H24C1).

Read container label completely before using and follow instructions as stated.

IMPORTANT: To prevent engine damage, DO NOT use pure anti-freeze or less than a 50% anti-freeze mixture in the cooling system. DO NOT mix or add any additives/conditioners to the cooling system in Lawn and Grounds Care/Golf and Turf Division equipment. Water used to dilute engine coolant concentrate must be of high quality—clean, clear, potable water (low in chloride and hardness–Table 1) is generally acceptable. DO NOT use salt water. Deionized or distilled water is best to use. Coolant that is not mixed to these specified levels and water purity can cause excessive scale, sludge deposits, and increased corrosion potential.

Water Quality

Property	Requirements
Total Solids, Maximum	340 ppm (20 grns/gal)
Total Hardness, Max.	170 ppm (10 grns/gal)
Chloride (as Cl), Max.	40 ppm (2.5 grns/gal)
Sulfate (as SO_4), Max.	100 ppm (5.8 grns/gal)

Mix 50 percent anti-freeze concentrate with 50 percent distilled or deionized water. This mixture will protect the cooling system down to -37°C(-34°F) and up to 108°C (226°F).

Certain geographical areas may require lower air temperature protection. See the label on your anti-freeze container or consult your John Deere dealer to obtain the latest information and recommendations.

DIESEL ENGINE COOLANT DRAIN INTERVAL – EUROPE

When using **John Deere Cool-Gard Coolant Concentrate** for Automobile and Light Duty Engine Service, drain and flush the cooling system and refill with fresh coolant mixture every **24 months or 2,000 hours** of operation, whichever comes first.

If above John Deere Automobile and Light Duty Engine Service coolant **is not** being used; drain, flush, and refill the cooling system according to instructions found on product container or in equipment operator's manual or technical manual.

PREVIEW - YOUFIXTHIS.COM

Download full manual at youfixthis.com

READING ELECTRICAL SCHEMATICS

The schematic is made up of individual circuits laid out in a sequence of related functions. It is formatted with all power wires (A) across the top and all ground wires (B) across the bottom. Current flow is generally from top to bottom through each circuit and component. All components are shown in the OFF position. The diagram does not list connector (C) information unless needed to avoid confusion. If the connector is shown, the number next to it is the terminal pin location (D) in the connector.

Each component is shown by a symbol (E), its name (F), and an identification code (G). The identification code contains a device identifying letter (H) and number (I).

The identifying letter is always the same for a specific component, but the identifying numbers are numbered consecutively from upper left to lower right. The terminal designation (J) is placed directly inside the symbol next to the connecting wire path. Switch positions (K) are placed directly outside the symbol. The solid line (L) shows the position the switch is currently in and dash lines (M) represent other switch positions.

Each circuit is identified at the bottom of the drawing by a section number (N) and section name (O).

The circuit number (P) and wire color (Q) of the wires are shown directly next to the wire path.

The same component name and identification code are used consistently on all diagrams in this section. Components can be easily cross-referenced.

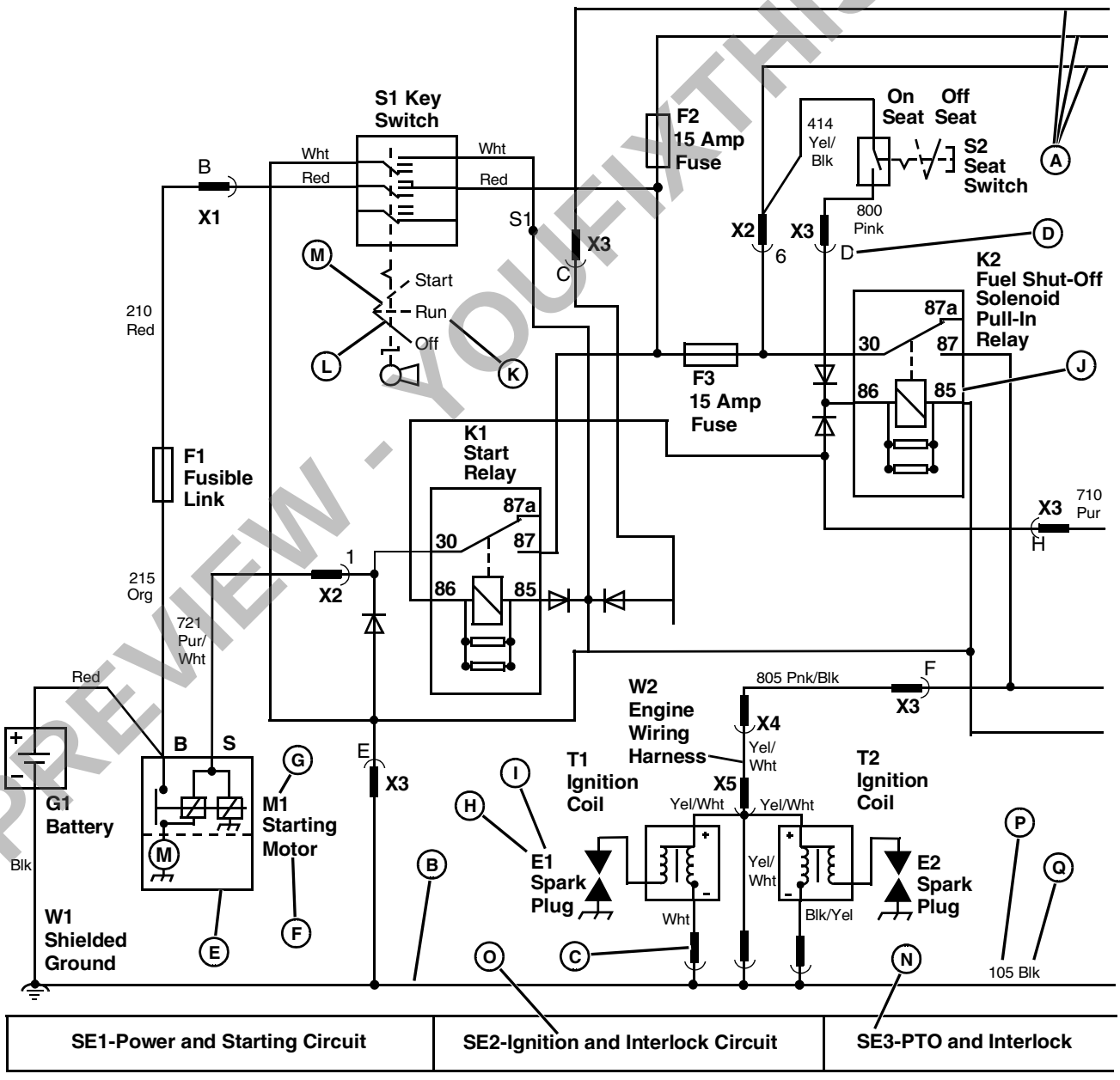

PREVIEW - YOUFIXTHIS.COM

Download full manual at youfixthis.com

HYDRAULIC SCHEMATIC

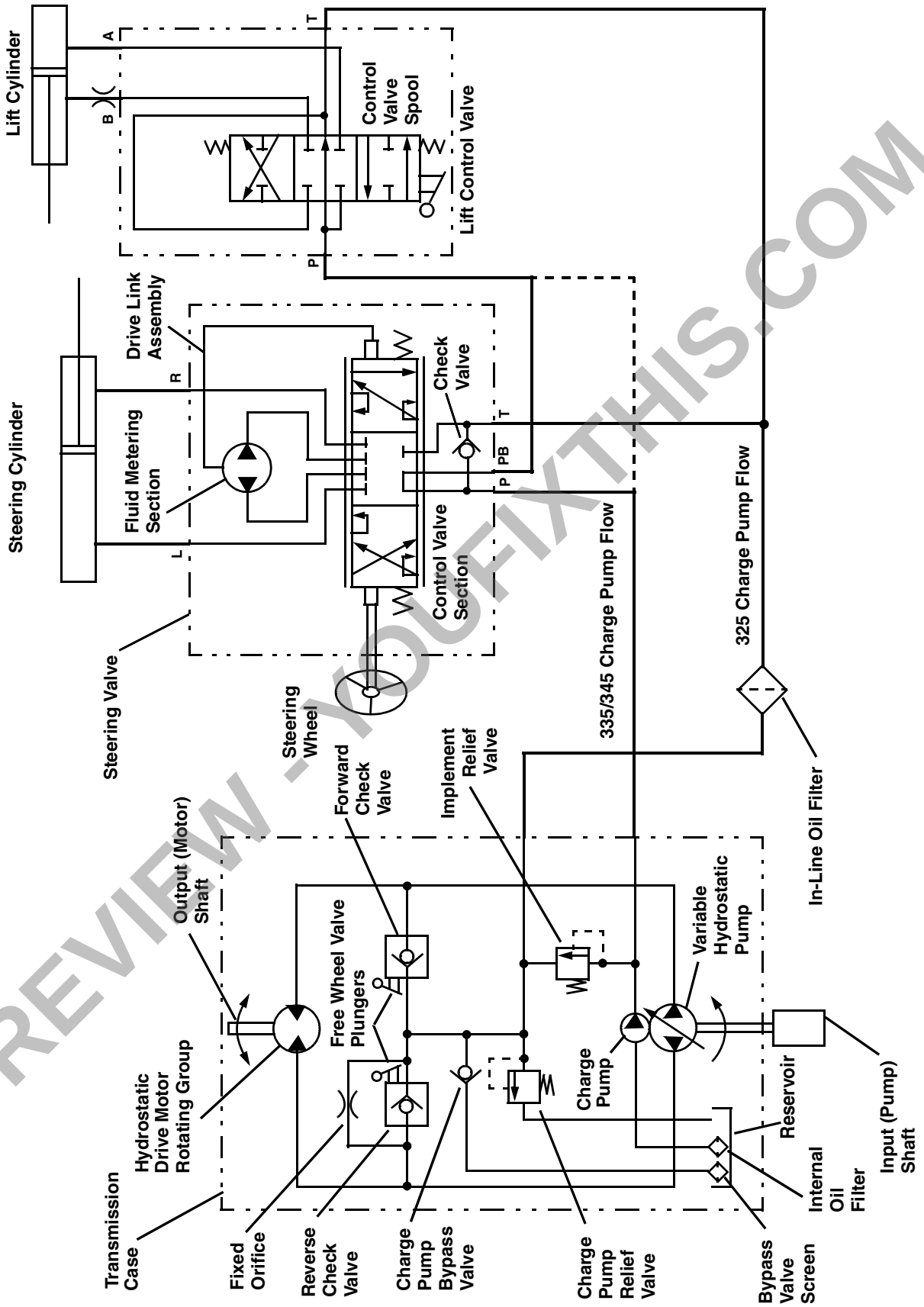

PREVIEW - YOUFIXTHIS.COM

Download full manual at youfixthis.com

FUEL INJECTORS—EXPLODED VIEW

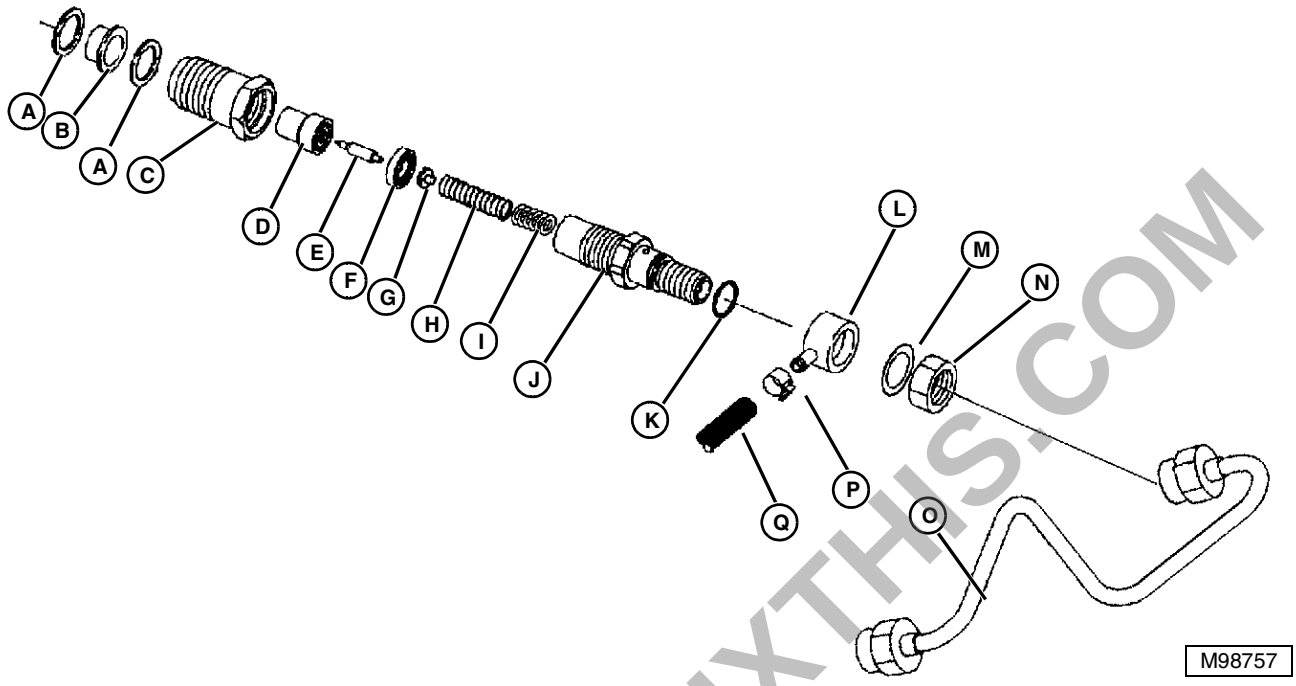

A. Sealing Washers (2 used)
B. Bushing
C. Injector Case Nut
D. Injector Body
E. Injector Valve
F. Valve Stop
G. Seat
H. Spring
I. Pressure Adjusting Shims
J. Injector Holder
K. O-Ring
L. Leak-Off Fitting
M. Sealing Washer
N. Leak-Off Fitting Nut
O. Injection Line
P. Clamp
Q. Leak-Off Return Hose

Remove:

IMPORTANT: Never steam clean or pour cold water on injection pump and injectors while they pump are running or warm. Doing so can damage the pump and the injectors. The injectors are matched to the cylinders, if removing more than one injector at a time, tag them according to the cylinder from which they were removed.

1. Allow engine to cool.
2. Disconnect headlights and remove hood.

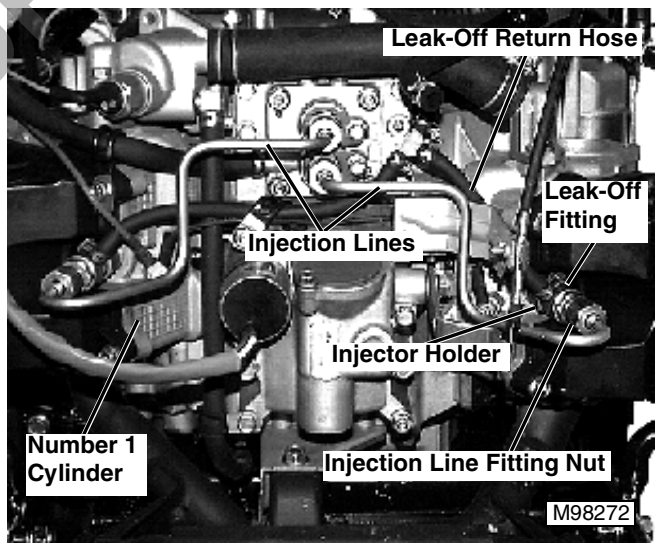

3. Thoroughly clean the front of the engine, especially the fuel injection lines and the areas around the pump and governor assemblies and the cylinder heads.

PREVIEW - YOUFIXTHIS.COM

Download full manual at youfixthis.com

METRIC FASTENER TORQUE VALUES

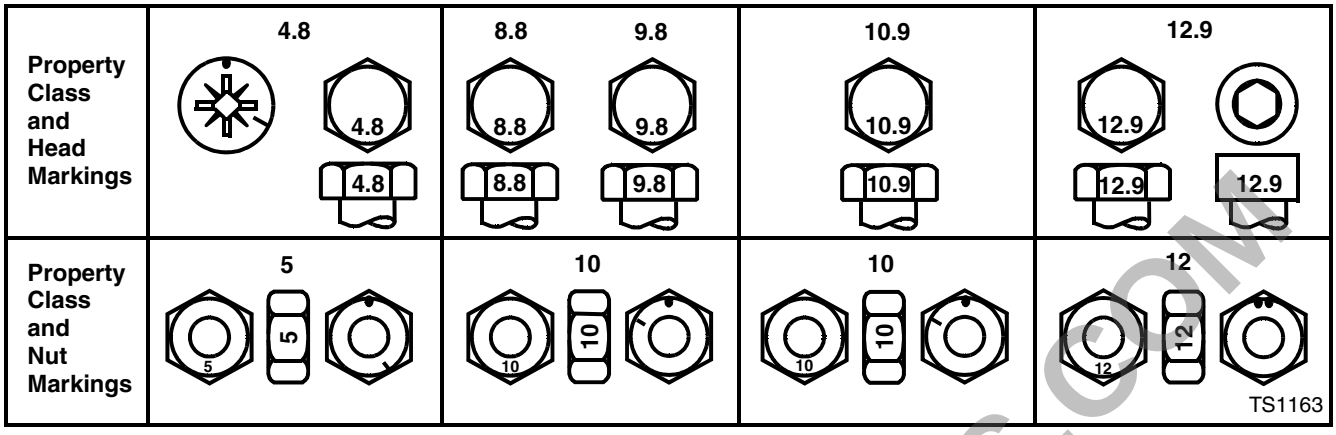

	Class 4.8				Class 8.8 or 9.8				Class 10.9				Class 12.9			
	Lubricated[a]		Dry[a]		Lubricated[a]		Dry[a]		Lubricated[a]		Dry[a]		Lubricated[a]		Dry[a]	
SIZE	N•m	lb-ft	N•m	lb-ft	N•m	lb-ft	N•m	lb-ft	N•m	lb-ft	N•m	lb-ft	N•m	lb-ft	N•m	lb-ft
M6	4.8	3.5	6	4.5	9	6.5	11	8.5	13	9.5	17	12	15	11.5	19	14.5
M8	12	8.5	15	11	22	16	28	20	32	24	40	30	37	28	47	35
M10	23	17	29	21	43	32	55	40	63	47	80	60	75	55	95	70
M12	40	29	50	37	75	55	95	70	110	80	140	105	130	95	165	120
M14	63	47	80	60	120	88	150	110	175	130	225	165	205	150	260	190
M16	100	73	125	92	190	140	240	175	275	200	350	225	320	240	400	300
M18	135	100	175	125	260	195	330	250	375	275	475	350	440	325	560	410
M20	190	140	240	180	375	275	475	350	530	400	675	500	625	460	800	580
M22	260	190	330	250	510	375	650	475	725	540	925	675	850	625	1075	800
M24	330	250	425	310	650	475	825	600	925	675	1150	850	1075	800	1350	1000
M27	490	360	625	450	950	700	1200	875	1350	1000	1700	1250	1600	1150	2000	1500
M30	675	490	850	625	1300	950	1650	1200	1850	1350	2300	1700	2150	1600	2700	2000
M33	900	675	1150	850	1750	1300	2200	1650	2500	1850	3150	2350	2900	2150	3700	2750
M36	1150	850	1450	1075	2250	1650	2850	2100	3200	2350	4050	3000	3750	2750	4750	3500

DO NOT use these hand torque values if a different torque value or tightening procedure is given for a specific application. Torque values listed are for general use only and include a ±10% variance factor. Check tightness of fasteners periodically. DO NOT use air powered wrenches.

Shear bolts are designed to fail under predetermined loads. Always replace shear bolts with identical grade.

Fasteners should be replaced with the same class. Make sure fastener threads are clean and that you properly start thread engagement. This will prevent them from failing when tightening.

When bolt and nut combination fasteners are used, torque values should be applied to the **NUT** instead of the bolt head.

Tighten toothed or serrated-type lock nuts to the full torque value.

[a] *"Lubricated" means coated with a lubricant such as engine oil, or fasteners with phosphate and oil coatings. "Dry" means plain or zinc plated (yellow dichromate - Specification JDS117) without any lubrication.*

Reference: JDS—G200.

PREVIEW - YOUFIXTHIS.COM

Download full manual at youfixthis.com

DIAGNOSIS

ENGINE SYSTEM

Test Conditions:

- Machine parked on level surface.
- Park brake engaged.
- Key switch OFF unless indicated otherwise.

Test/Check Point	Normal	If Not Normal
1. Engine dipstick and exterior engine surface—engine oil check.	Oil level between “L” and “H” marks. Oil not burnt, or contaminated with metal particles, fuel, or coolant. No external leakage. Filter clean.	Change oil and inspect for source of contamination. Check gaskets, seals, plugs, cylinder head, block, and intake manifold and breather. Change oil filter.
2. Coolant tank and radiator.	Coolant level between marks on tank when engine is warm. Coolant in radiator full to top. Coolant not contaminated with oil, or fuel, or discolored brown.	Add proper coolant mix. Drain and flush system. Check for source of contamination.
	Radiator screen free of debris.	Clean or replace.
	Water pump not leaking.	Inspect water pump (see WATER PUMP—REMOVAL AND INSTALLATION).
	Hoses not cracked or leaking; clamps and radiator cap tight.	Pressure test radiator and cap (see COOLING SYSTEM PRESSURE TEST).
	Fan blades not damaged or warped.	Replace fan.
3. Fuel tank, pump, lines, filter, filter shutoff valve.	Fuel level correct, not contaminated, correct grade of fuel, no water. Fuel pump in-line filter free of debris. Fuel shutoff valve in ON position.	Drain and clean fuel tank. Add fresh fuel. Replace filters. Move to ON position.
	Fuel hoses not cracked or leaking.	Replace.
	Fuel hose clamps tight.	Replace or tighten.
4. Air filter and air intake.	Air filter hose not cracked, clamps tight. Element not plugged. Air filter housing sealed, no dirt tracking inside filter element.	Replace and tighten clamps. Replace element or housing.
5. Fuel shut-off solenoid. (Key in START and RUN position.)	Fuel shut-off solenoid must pull-in and hold-in.	If solenoid will not pull-in and hold-in, see FUEL SHUT-OFF CIRCUIT in ELECTRICAL section.

NOTE: On Export and late model Domestic tractors there is a hood switch connector:

Export tractors—it connects to the hood switch on the front, left side hood mounting bracket and controls all electrical functions beyond the key switch and circuit board, excluding the headlight circuit. If the hood is open, no electrical power is supplied to the rest of the electrical components. Anytime the hood is opened or removed on Export tractors, the hood switch must be held closed to start the engine or test any electrical components or circuits.

Late Model Domestic tractors—it has a blue jumper wire installed into the connector instead of connecting to a hood switch; however, this blue jumper wire still controls all electrical functions beyond the key switch and circuit board, excluding the headlight circuit. Regardless if the hood is open or not, no electrical power is supplied to the rest of the electrical components if the blue jumper wire is missing, disconnected, corroded, or broken.

The Export hood switch or late model Domestic blue jumper wire should be checked before any electrical diagnostic procedures are performed.

PREVIEW - YOUFIXTHIS.COM

Download full manual at youfixthis.com

RECOGNIZE SAFETY INFORMATION

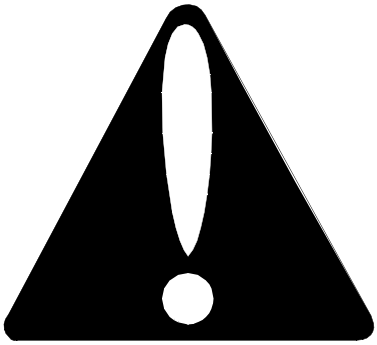

This is the safety-alert symbol. When you see this symbol on your machine or in this manual, be alert to the potential for personal injury.

Follow recommended precautions and safe servicing practices.

Understand Signal Words

A signal word—DANGER, WARNING, or CAUTION—is used with the safety-alert symbol. DANGER identifies the most serious hazards.

DANGER or WARNING safety signs are located near specific hazards. General precautions are listed on CAUTION safety signs. CAUTION also calls attention to safety messages in this manual.

REPLACE SAFETY SIGNS

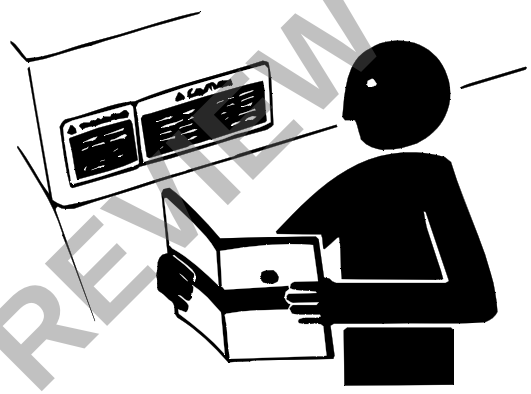

Replace missing or damaged safety signs. See the machine operator's manual for correct safety sign placement.

HANDLE FLUIDS SAFELY-AVOID FIRES

Be Prepared For Emergencies



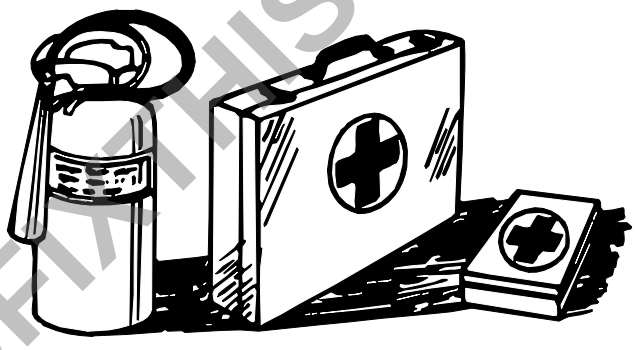

When you work around fuel, do not smoke or work near heaters or other fire hazards.

Store flammable fluids away from fire hazards. Do not incinerate or puncture pressurized containers.

Make sure machine is clean of trash, grease, and debris.

Do not store oily rags; they can ignite and burn spontaneously.

Be prepared if a fire starts.

Keep a first aid kit and fire extinguisher handy.

Keep emergency numbers for doctors, ambulance service, hospital, and fire department near your telephone.

PREVIEW - YOUFIXTHIS.COM

Download full manual at youfixthis.com

TESTS AND ADJUSTMENTS

OIL PRESSURE TEST

Reason:

To determine if the engine bearings or the lubrication system components are worn.

Test Equipment:

- JT03017 Hose Assembly
- JT05577 Pressure Gauge 689 kPa (100 psi)
- JT0334a Connector

Procedure:

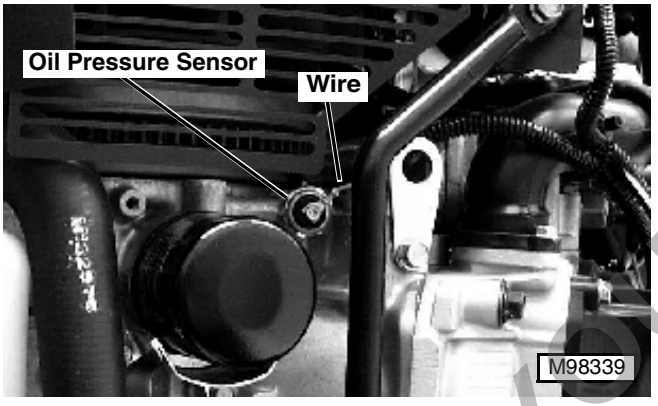

1. Remove wire and oil pressure sensor on right side of engine, next to the oil filter.
2. Install JT0334a Connector.
3. Connect JT03017 Hose Assembly and JT05577 Pressure Gauge.

NOTE: Export and late model Domestic tractors respectively—hold hood switch closed or make sure blue jumper wire is good.

4. Start engine and warm engine to operating temperature (approximately five minutes).
5. Check oil pressure at FAST idle. Oil pressure should meet or exceed specification.

Specification:

Engine Oil Pressure . . . . . 241 kPa (35 psi)

Results:

- If oil pressure is not within specifications, inspect the oil pump.
- If oil pump is within specifications, the engine may have parts worn beyond specification.

6. Coat threads of sensor with John Deere TY15934 No. 2 PERMATEX sealant and install. DO NOT over-tighten.
7. Connect wire to sensor.

CYLINDER COMPRESSION TEST

Reason:

To determine the condition of the pistons, rings, cylinder walls and valves.

Test Equipment:

- JT01682 Compression Gauge Assembly
- JDG472 Adapter

Procedure:

1. Remove hood.

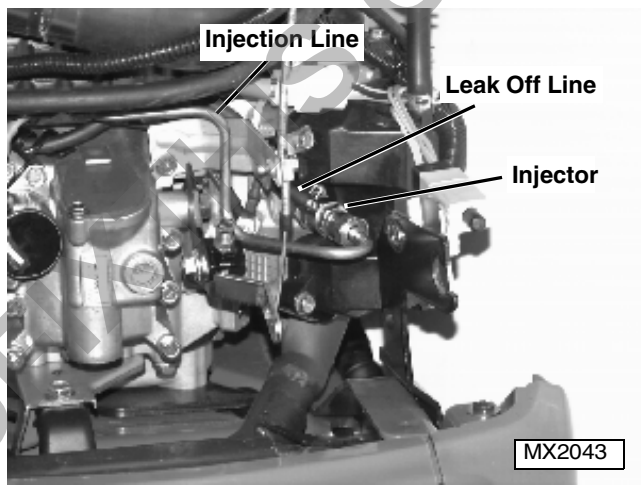

2. Remove injection line, leak-off line, and injector (see FUEL INJECTOR—REMOVE AND INSTALL, in the REPAIR section).
3. Disconnect fuel shutoff solenoid connector.

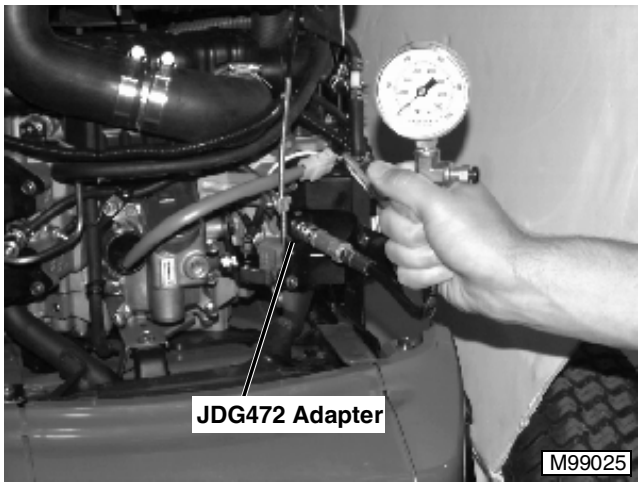

IMPORTANT: Injector sealing washer must be used when installing JDG472 Adapter to prevent damage to injector sealing surface.

4. Install JDG472 Adapter.
5. Connect JT01682 Compression Gauge Assembly to adapter.

PREVIEW - YOUFIXTHIS.COM

Download full manual at youfixthis.com

		Standard	Limit
Top Ring	Piston groove width	1.270—1.290 mm (0.050—0.051 in.)	—
	Ring width	1.190—1.210 mm (0.047—0.048 in.)	—
	Side clearance	0.06—0.10 mm (0.002—.004 in.)	—
	End gap	0.20—0.40 mm (0.008—0.016 in.)	1.5 mm (0.059)
Second Ring	Piston groove width	1.530—1.550 mm (0.060—0.061 in.)	—
	Ring width	1.47—1.49 mm (0.058—0.059 in.)	—
	Side clearance	0.04—0.08 mm (0.002—0.003 in.)	—
	End gap	0.35—0.55 mm (0.014—0.022 in.)	1.5 mm (0.059)
Oil Ring	Piston groove width	3.010—3.030 mm (0.1185—0.1192 in.)	—
	Ring width	2.97—2.99 mm (0.117—0.118 in.)	—
	Side clearance	0.02—0.06 mm (0.001—0.002 in.)	—
	End gap	0.20—0.40 mm (0.008—0.016 in.)	1.5 mm (0.059)

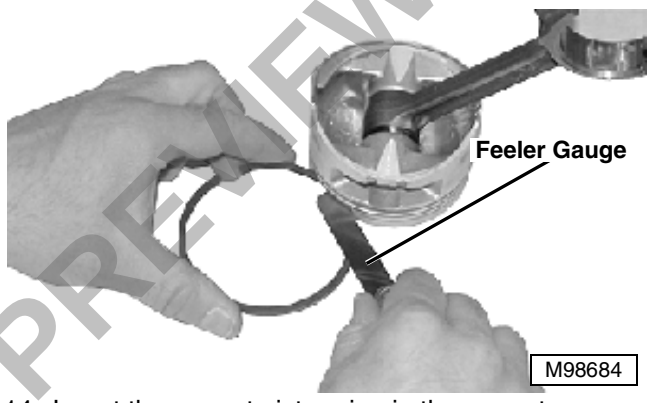

14. Insert the correct piston ring in the correct groove in piston. Using a feeler gauge, measure all three ring side clearances. If only one ring is bad, replace as complete set, DO NOT replace only one ring and mix with original rings.

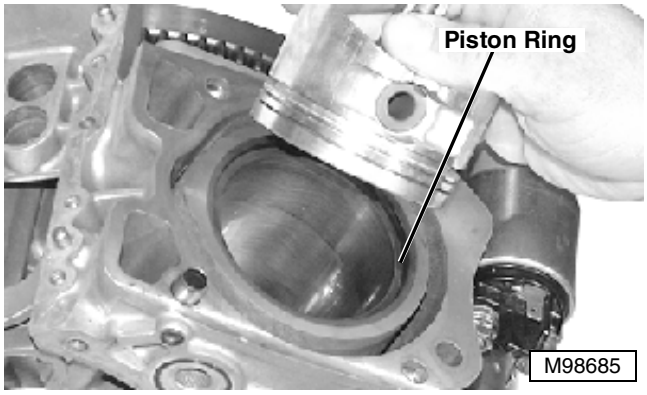

15. Install a piston ring into cylinder. Using the piston/rod assembly, push the piston ring into the cylinder approximately 30 mm (1.180 in.).

PREVIEW - YOUFIXTHIS.COM

Download full manual at youfixthis.com

ADDITIONAL ELECTRICAL WIRING HARNESSES—355D DOMESTIC (EARLY AND LA

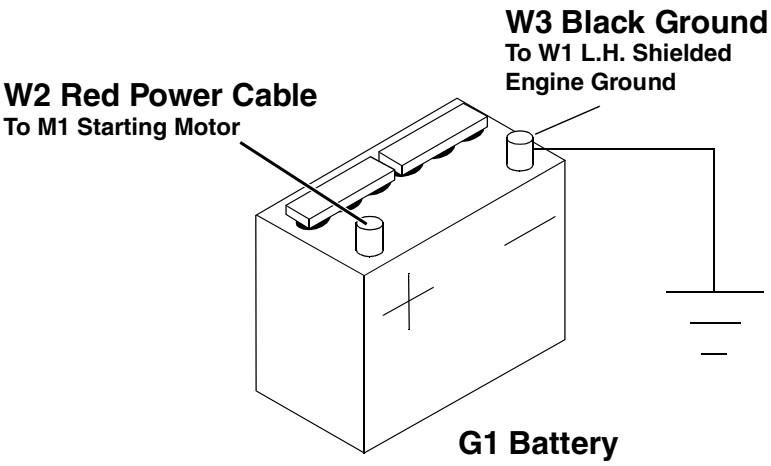

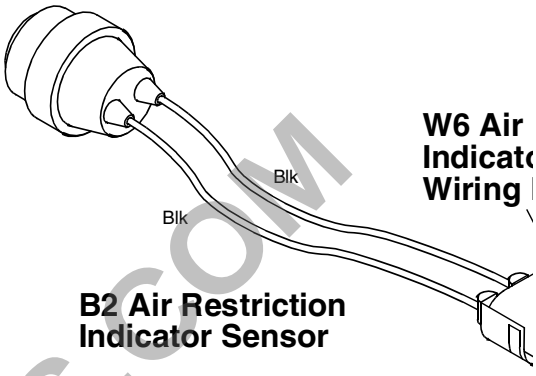

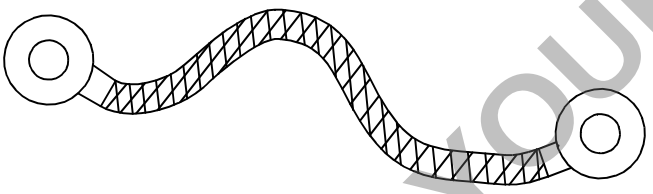

W4 Braided Ground Cable
From R.H. Engine Ground
To R.H. Chassis Ground

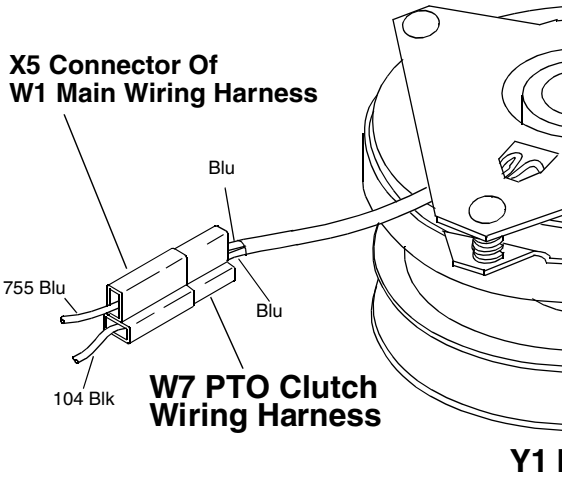



W5 Glow Plug Wiring Harness
From L.H. R1 Glow Plug To R.H. R2 Glow Plug

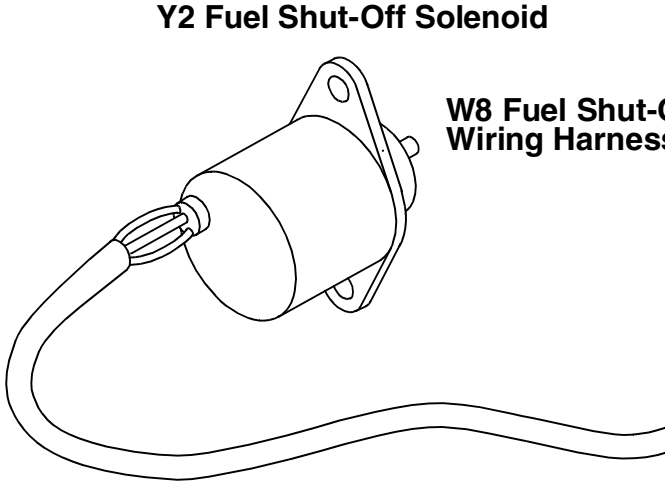

PREVIEW - YOUFIXTHIS.COM

Download full manual at youfixthis.com

COOLANT TEMPERATURE SENSOR POWER CIRCUIT—355D DOMESTIC

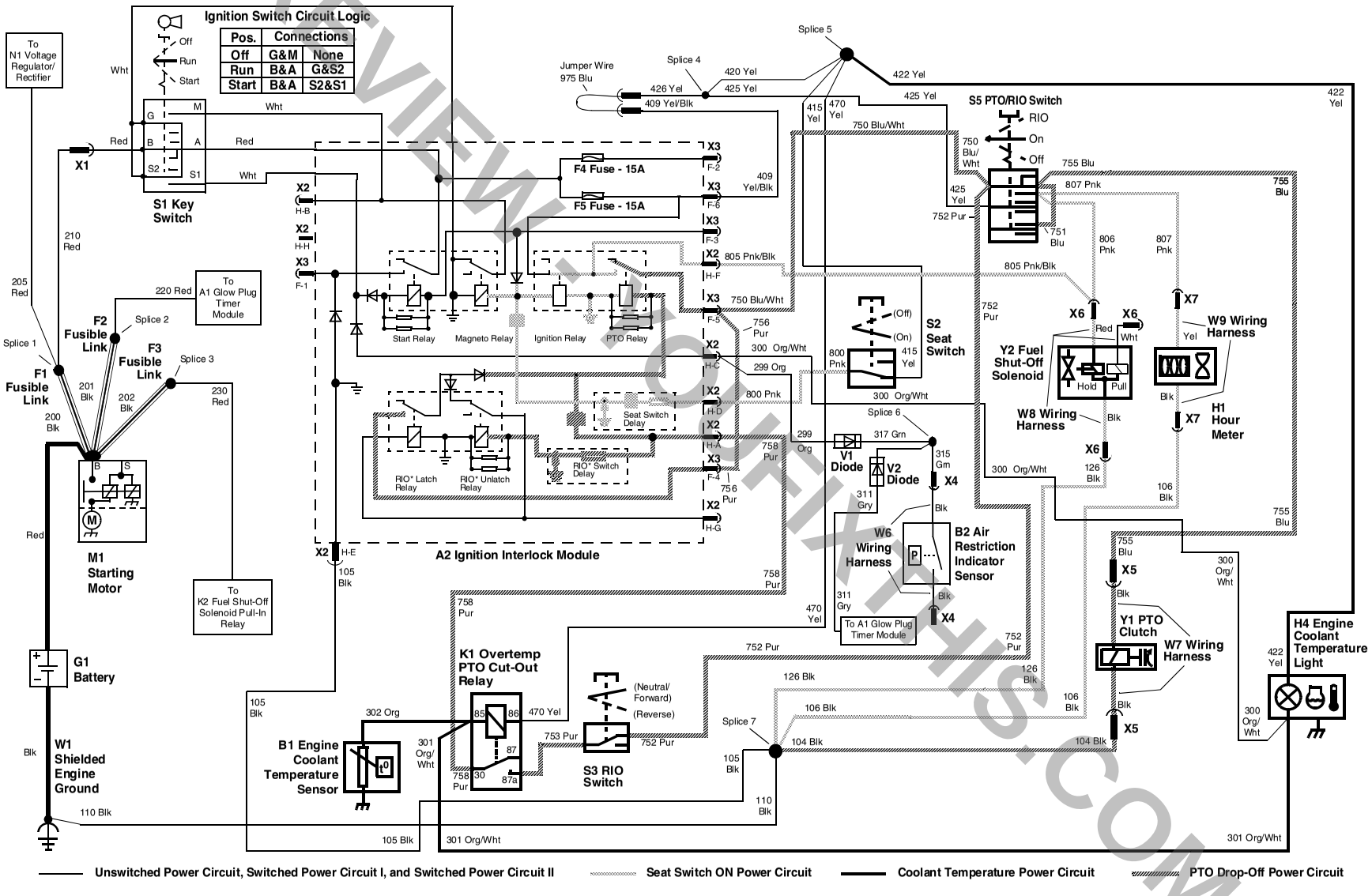

PREVIEW - YOUFIXTHIS.COM
Download full manual at youfixthis.com

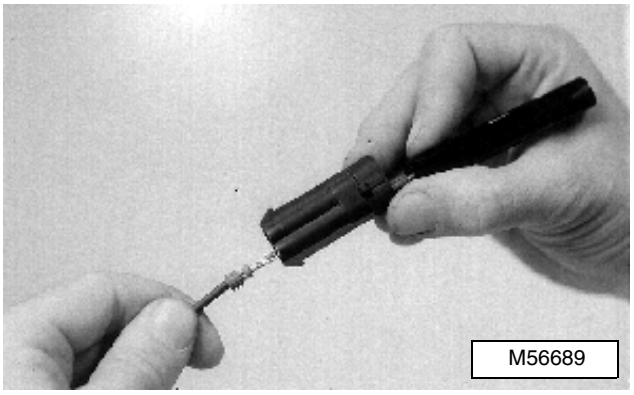

4. Hold the removal tool fully seated and pull wire from connector body.

REPLACEMENT

1. Remove wire from connector body as described above.

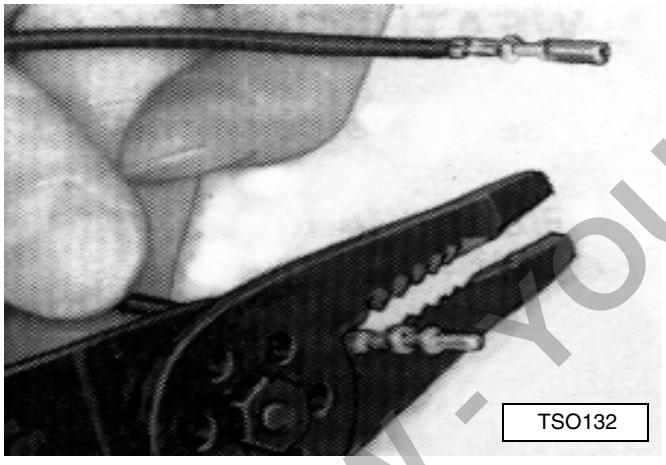

2. Use JDG145 Universal Electrical Plier to remove wire as close as possible to old contact.

IMPORTANT: METRIPACK® connectors are keyed A, B, C, etc. for proper contact mating. Be sure contacts and wire colors/numbers match and are in proper alignment.

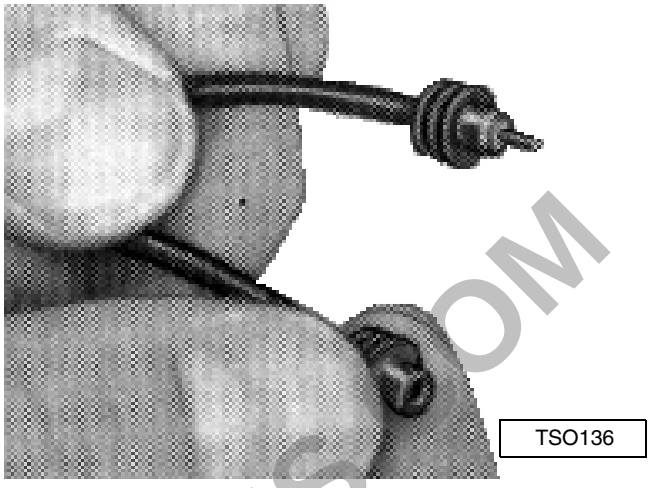

3. Install correct size cable seal on wire.

NOTE: Cables seals are available for three sizes of wire:

- Large—1.0 mm (16 gauge) wire
- Medium—0.8 mm (18 gauge) wire
- Small—0.5 mm (20 gauge) wire

4. Strip insulation from wire to expose 6 mm (1/4 in.) and align cable seal with edge of insulation.

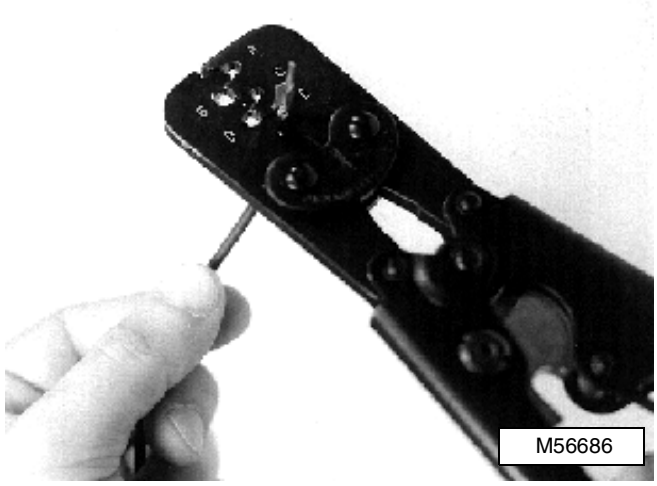

5. Place proper size contact on wire and use JDG776 Crimper to crimp contact in place with a “W” type crimp.

PREVIEW - YOUFIXTHIS.COM

Download full manual at youfixthis.com

TRANSAXLE CONTROL LINKAGE

Function:

The function of the internal linkage is to control the movement of the hydrostatic swash plate to include forward, reverse, return to neutral and true neutral.

Theory of Operation:

When the hydrostatic control arm (B) is moved to the forward position, the swashplate control cam (C) moves an equal amount. A ball joint pivot (G) attached to the control cam transfers movement to the swashplate through the shift blocks (A). As the swashplate is moved, the angle of the swashplate changes allowing the pump pistons to reciprocate.

When force is removed from the swashplate control arm the swashplate returns to the neutral position. The neutral control spring (F) applies pressure on the lobe attached to the swashplate control cam. This forces the swashplate back to the neutral position.

When in neutral, the lobe on the swash plate control cam is retained between the two legs of the torsion spring. The spring legs rest on the neutral adjustment eccentric cam (E). When the neutral adjustment eccentric is turned, it moves the spring legs and swash plate control cam to obtain true neutral. The neutral adjustment eccentric is held in place by nut (D).

A–Shift Blocks
B–Hydrostatic Control Arm
C–Swashplate Control Cam
D–Neutral Adjustment Eccentric Nut
E–Neutral Adjustment Eccentric
F–Neutral Control Spring
G–Ball Joint Pivot
H–Variable Position Swashplate

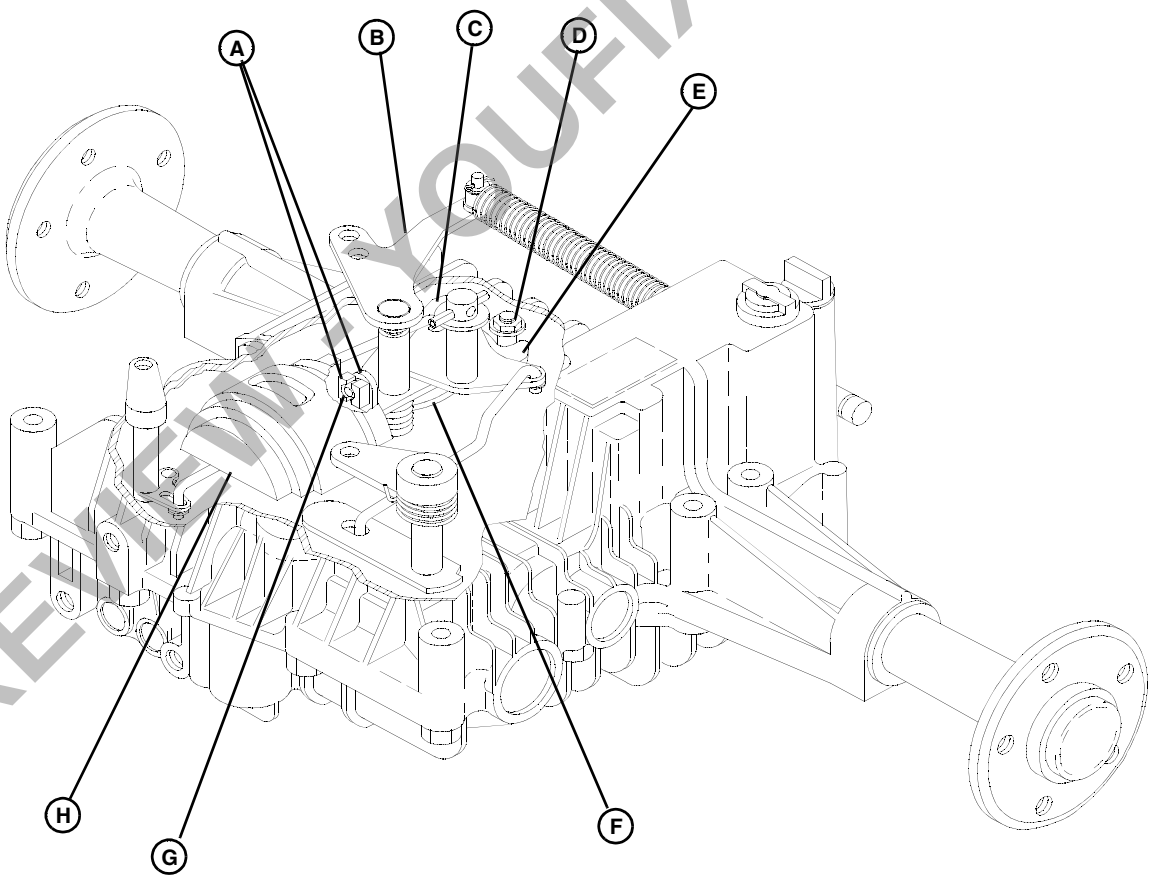

M82807AE

PREVIEW FROM YOUFIXTHIS.COM

Download full manual at youfixthis.com

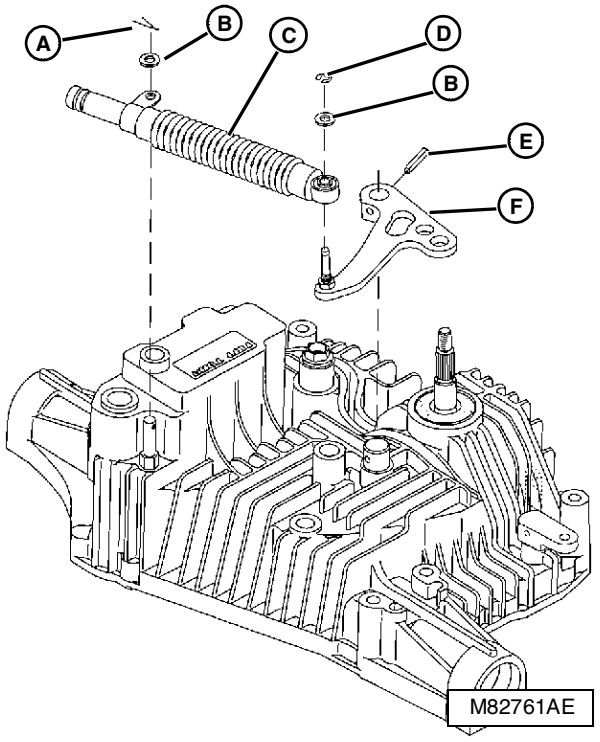

76. Install control arm (F) and roll pin (E).
77. Install shock absorber (C), washers (B), cotter pin (A), and retaining ring (D).

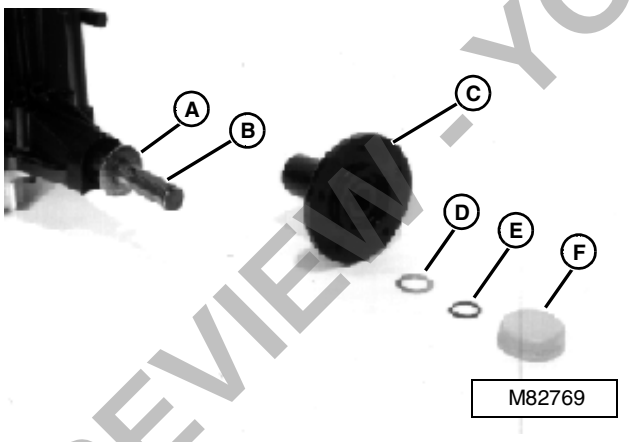

A–Washer
B–Key
C–Hub
D–Washer
E–Retaining Ring
F–Cap

78. Apply MPG-2® Polymer Multipurpose Grease to axle shafts.
79. Install parts (A—F).

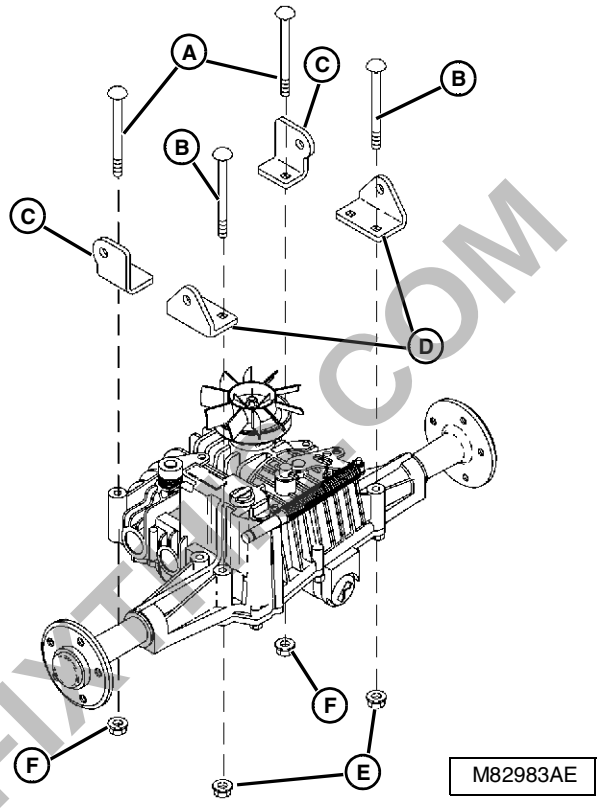

NOTE: When installing nuts (E and F), leave loose. Nuts are tightened AFTER transaxle is installed in tractor.

80. Install rear mounting brackets (D), carriage bolts (B) and nuts (E). Leave nuts loose.
81. Install front mounting brackets (C) as shown. Install carriage bolts (A) and lock nuts (F). Leave nuts loose.
82. Fill transaxle to proper level with clean hydrostatic/ hydraulic low viscosity HY-GARD® oil. (See SPECIFICATIONS AND GENERAL INFORMATION section.)

Case Seals—Replacement:

1. Remove rear wheel. (See procedure in MISCELLANEOUS section.)

PREVIEW - YOUFIXTHIS.COM

Download full manual at youfixthis.com

REPAIR

BRAKE ASSEMBLY

The brake assembly is an internal feature of the hydrostatic transmission. Inspection and repair of the brake assembly requires disassembly of the transmission. (See POWER TRAIN section.)

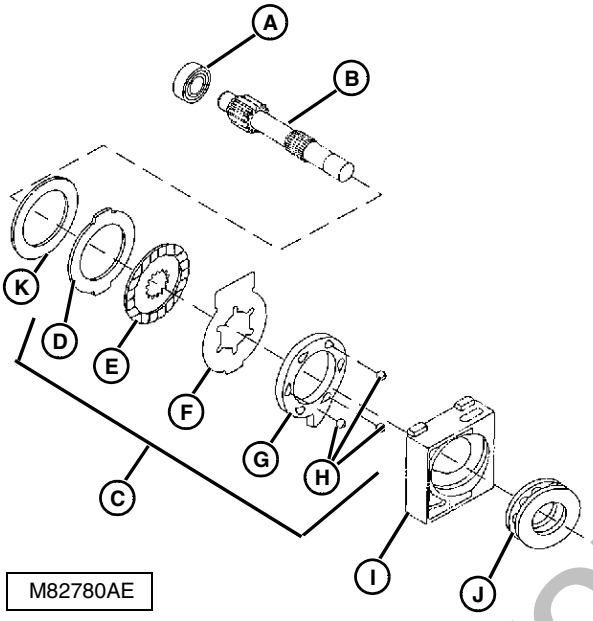

Motor Shaft and Brake Assembly

A–Bearing
B–Motor Shaft
C–Brake Assembly
D–Steel Plate (Thick)
E–Friction Plate
F–Steel Plate (Thin)
G–Actuator Plate
H–Ball (3 used)
I–Housing
J–Thrust Bearing
K–Shim (early models)

PREVIEW: YOUFIXTHIS.COM

Download full manual at youfixthis.com

44-MOWER—SPINDLES

Remove and Install:

1. Remove mower blade(s).
2. Remove mower drive belt.

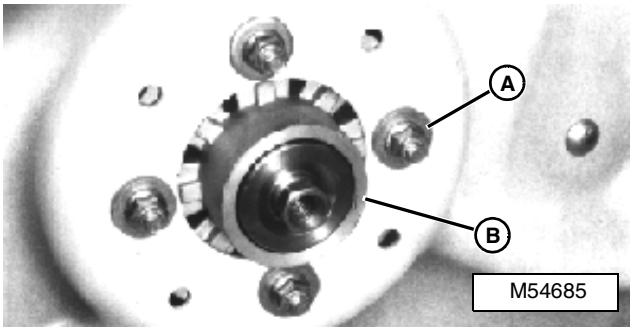

3. Remove four nuts and washers (A) and spindle (B).
4. Make repairs as necessary. (See *Disassembly/ Inspection* procedure.)

Installation is done in the reverse order of removal.

- Tighten nuts to **26 N•m (230 lb-in.)**.

Disassembly/Inspection:

CAUTION

Mower blades are sharp. Wear gloves or wrap blade with rag to prevent personal injury.

IMPORTANT: Do not install hexagon end of spindle shaft in a vise to remove spindle sheave nut. The hexagon end of the spindle shaft will be damaged resulting in improper blade operation. Two blade configurations are available. Mulching - Two blades, and Rear Discharge - One blade and a spacer.

1. Install blades or spacer and blade (K), washer (L), and cap screw (M) on spindle shaft. Make sure that the concave side of the washer faces the blade. If only the nut (A) or spindle sheave (B) need to be replaced, and the spindle is still in the deck, use a block of wood to prevent the blade from turning. If spindle is not in the deck, put blade in a soft jaw vise. Tighten cap screw (M) to **122 N•m (90 lb-ft)**.
2. Hold the blade with a vise or a block of wood. Remove nut (A), spindle sheave (B), and lubrication fitting (I).
3. Remove cap screw, washer, blade and spacer or blades.
4. Pull spindle shaft (J) out of spindle hub (F).
5. Remove seal rings (C) noting location of notched side.

NOTE: Remove bearings only if replacement is necessary.

6. Bearings (E) are seated against hub shoulder (H) and cannot be removed with a press. Remove seals (D) and bearings (E) using a punch.
7. Remove spacer (G).
8. Inspect all parts for wear or damage. Replace parts as necessary.

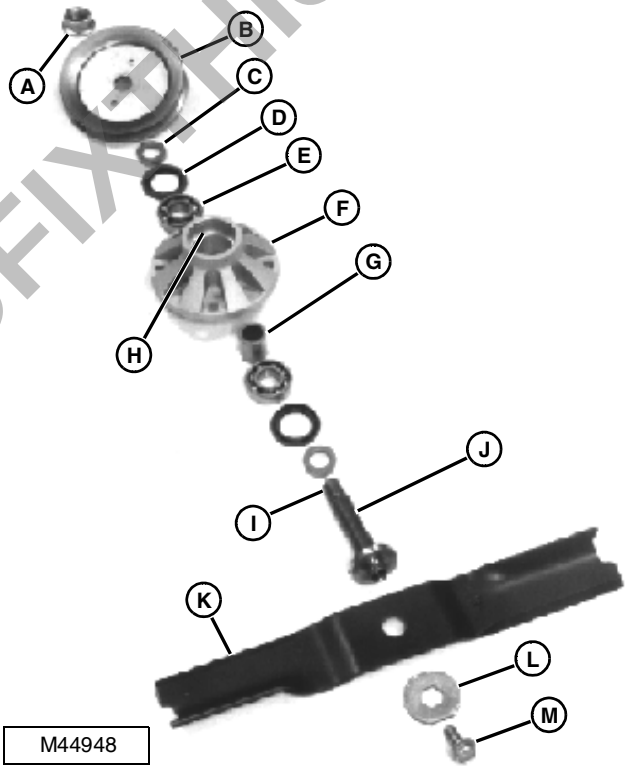

A. Nut
B. Spindle Sheave
C. Seal Ring (2 used)
D. Seal (2 used)
E. Bearing (2 used)
F. Spindle Hub
G. Spacer
H. Spindle Hub Shoulder
I. Lubrication Fitting
J. Spindle Shaft
K. Blade
L. Washer
M. Cap Screw

PREVIEW - YOUFIXTHIS.COM

Download full manual at youfixthis.com

PREVIEW ONLY

You're viewing 17 of 403 pages

The full manual includes:

- All 403 pages, complete
- Searchable PDF (find any keyword)
- No watermarks
- Instant download
- Print-ready quality

GET FULL MANUAL NOW

John Deere 355D Technical Manual

Scan or click anywhere
youfixthis.com

Click anywhere on this page to get the full manual