Group 25
SEPARATION

REMOVING SOUND-GARD BODY

When the tractor is equipped with a Sound-Gard Body (or a 4-post Roll-Gard), it may be necessary to remove the body or Roll-Gard in order to service components that would otherwise be inaccessible.

Disconnect the battery ground cable.

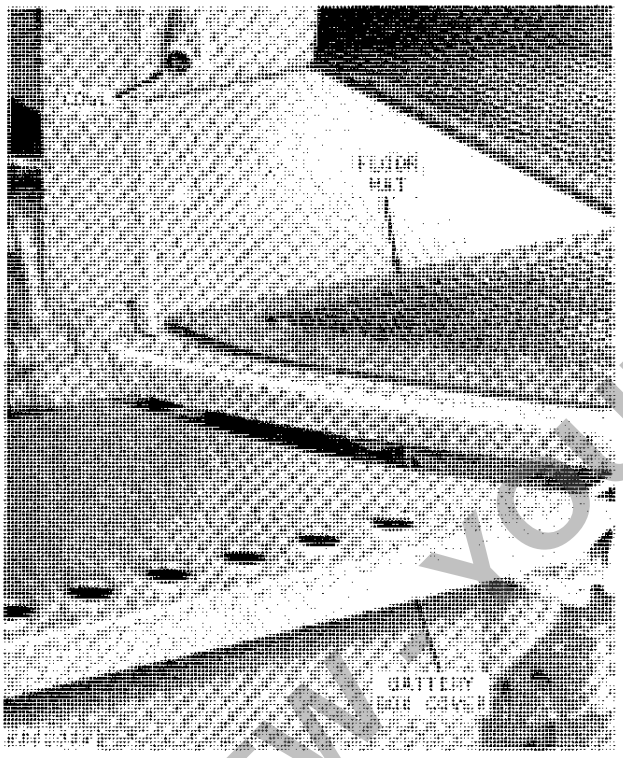

Fig. 1—Body Removal Steps (Front)

Remove the cowl, floor mat, and battery box covers (Fig .1). Then remove the Control Island floor panel, and disconnect body wiring harness at connectors.

Remove the front mounting bolts (Fig. 2).

CAUTION: Follow all safety precautions found on page 80-10-6 when working with the air conditioning system.

Disconnect refrigerant couplers (Fig. 3) on tractors with air conditioning by holding the coupler body stationary with a wrench, and unscrewing coupler with another wrench. If refrigerant can be heard escaping as the coupler is loosened, re-tighten coupler and loosen again.

Remove the rear Control Island-to-body bolts (Figs. 3 and 4).

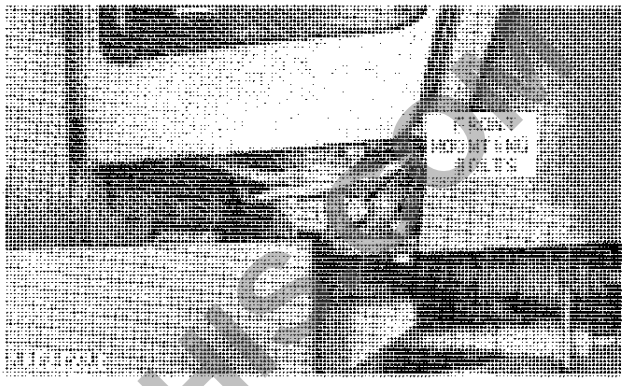

Fig. 2—Front Mounting Bolts

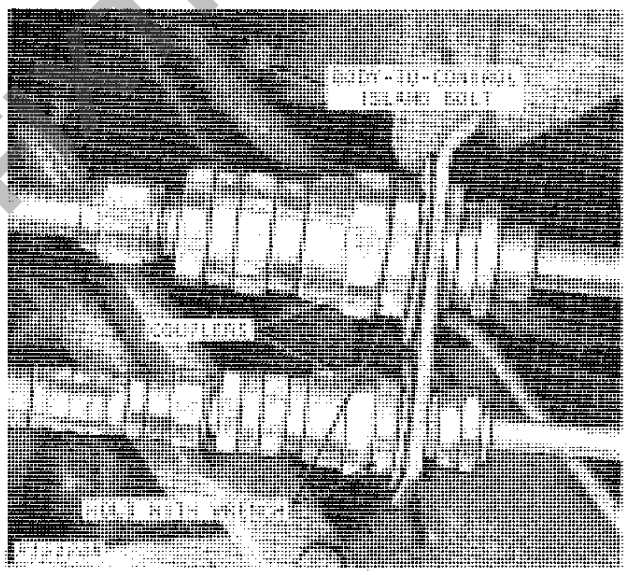

Fig. 3—Air Conditioning Couplers

Disconnect transmission and speed control rods (Fig. 4). Disconnect control valve operating rod on Quad-Range tractors.

Disconnect the rockshaft and selective control valve rods (Fig. 5) at the front end.

Remove the mounting cap screws and lock plate.

On tractors equipped with a heater, partially drain the cooling system. Disconnect the heater hoses at connections under right-hand fender next to rear post.

Litho in U.S.A.

PREVIEW YOUFIXTHIS.COM

Download full manual at youfixthis.com



Blurred on purpose. The manual you buy has this page in full quality.

PREVIEW - YOUFIXTHIS.COM

Download full manual at youfixthis.com

Group 10
AIR INTAKE SYSTEM



Blurred on purpose. The manual you buy has this page in full quality.

PREVIEW - YOUFIXTHIS.COM

Download full manual at youfixthis.com

Group 5
GENERAL INFORMATION AND DIAGNOSIS

GENERAL INFORMATION

The engine is a 6-cylinder valve-in-head vertical in-line four cycle engine. Two types of fuel, each with the appropriate fuel delivery device, are available—gasoline or diesel.



For basic theory of engine operation see FOS Manual 30—ENGINES.

DIAGNOSING ENGINE MALFUNCTIONS

Will Not Start

Fuel System Malfunction—See Section 30
- Foreign matter in fuel
- Improper fuel
- Faulty fuel pump
- Fuel shut off at tank
- Restricted air intake system
- Faulty injection nozzles
- Plugged fuel filter
- Carburetor malfunction
- Sticking choke

Electrical System Malfunction—See Section 40
- Corroded or loose battery connections
- Faulty or loose wiring
- Weak battery
- Faulty key switch
- Faulty safety start switches
- Faulty ignition system

Uneven Running or Frequent Stalling

Basic Engine Problem—See This Section
- Improper valve clearance
- Cylinder head gasket leaking
- Valves sticking or burned
- Worn or broken compression rings
- Low compression
- Incorrect timing
- Coolant temperature below normal
- Engine overheating

Fuel System Malfunction—See Section 30
- Low fuel supply
- Restricted fuel lines or filters
- Faulty fuel pump
- Faulty injection pump
- Faulty injection nozzles
- Exhaust system restricted
- Carburetor adjusted incorrectly
- Leaking carburetor or intake manifold gaskets

Electrical System Malfunction—See Section 40
- Faulty ignition system

Engine Misses

Basic Engine Problem—See This Section
- Weak valve springs
- Incorrect valve clearance
- Burned, warped, pitted, or sticking valves
- Low compression
- Worn camshaft lobes (could be caused by faulty damper)
- Incorrect timing
- Engine overheating

Fuel System Malfunction—See Section 30
- Air in fuel
- Faulty injection nozzles
- Faulty injection pump
- Water in fuel
- Mixture of gasoline and diesel fuels
- Faulty fuel pump
- Faulty carburetor

Electrical System Malfunction—See Section 40
- Incorrect type spark plugs (pre-ignition)
- Leaks in wiring
- Faulty ignition systems

Lack of Power

Basic Engine Problem—See This Section
- Blown cylinder head gasket
- Worn camshaft lobes
- Incorrect valve clearance
- Incorrect valve timing
- Burned, warped, pitted or sticking valves
- Weak valve springs
- Low compression
- Incorrect timing
- Wrong viscosity crankcase oil
- Engine overheating

Litho in U.S.A.

PREVIEW - YOUFIXTHIS.COM

Download full manual at youfixthis.com

4030 TRACTOR

TECHNICAL MANUAL

TM-1055 (JAN-78)

CONTENTS

SECTION 10—GENERAL
- Group 5—General Tractor Specifications
- Group 10—Predelivery, Delivery, and After-Sale Services
- Group 15—Tune-Up
- Group 20—Lubrication
- Group 25—Separation
- Group 30—Specifications and Special Tools

SECTION 20—ENGINE
- Group 5—General Information and Diagnosis
- Group 10—Cylinder Head, Valve Train, and Camshaft
- Group 15—Cylinder Block, Liners, Pistons, and Rods
- Group 20—Crankshaft, Main Bearings, and Flywheel
- Group 25—Lubricating System
- Group 30—Cooling System
- Group 35—Governor
- Group 40—Specifications and Special Tools

SECTION 30—FUEL SYSTEM
- Group 5—Diagnosing Malfunctions
- Group 10—Air Intake System
- Group 15—Diesel Fuel System
- Group 20—Gasoline Fuel System
- Group 25—Speed Control Linkage
- Group 30—Specifications and Special Tools

SECTION 40—ELECTRICAL SYSTEM
- Group 5—Information and Wiring Diagrams
- Group 10—Delcotron Charging Circuit
- Group 15—Delco-Remy Starting Circuit
- Group 20—John Deere Starting Circuit
- Group 25—Ignition System
- Group 30—Lighting and Accessory Circuits
- Group 35—Specifications and Special Tools

SECTION 50—POWER TRAIN
- Group 5—Perma-Clutch
- Group 10—Creeper Transmission
- Group 15—Syncro-Range Transmission
- Group 20—Quad-Range Transmission
- Group 25—Differential
- Group 30—Final Drive
- Group 35—PTO, Perma-Clutch
- Group 40—Specifications and Special Tools

SECTION 60—STEERING AND BRAKES
- Group 5—General Information

SECTION 70—HYDRAULIC SYSTEM
- Group 5—General Information
- Group 6—General Hydraulic Systems Tests and Diagnosis
- Group 10—Main Reservoir, Filters, Valves, and Oil Cooler
- Group 15—Hydraulic Pumps
- Group 20—Early Model Power Steering
- Group 22—Late Model Power Steering
- Group 25—Power Brakes
- Group 30—Rockshaft
- Group 35—Selective Control Valve, Breakaway Couplers, and Remote Cylinders
- Group 40—Specifications and Special Tools

SECTION 80—MISCELLANEOUS
- Group 5—Front Axles
- Group 10—Air Conditioning System
- Group 15—Heating System
- Group 20—Specifications and Special Tools

All information, illustrations and specifications contained in this technical manual are based on the latest information available at the time of publication. The right is reserved to make changes at any time without notice.

Copyright© 1978
DEERE & COMPANY
Moline, Illinois
All rights reserved

PREVIEW - YOUFIXTHIS.COM
Download full manual at youfixthis.com

INTRODUCTION

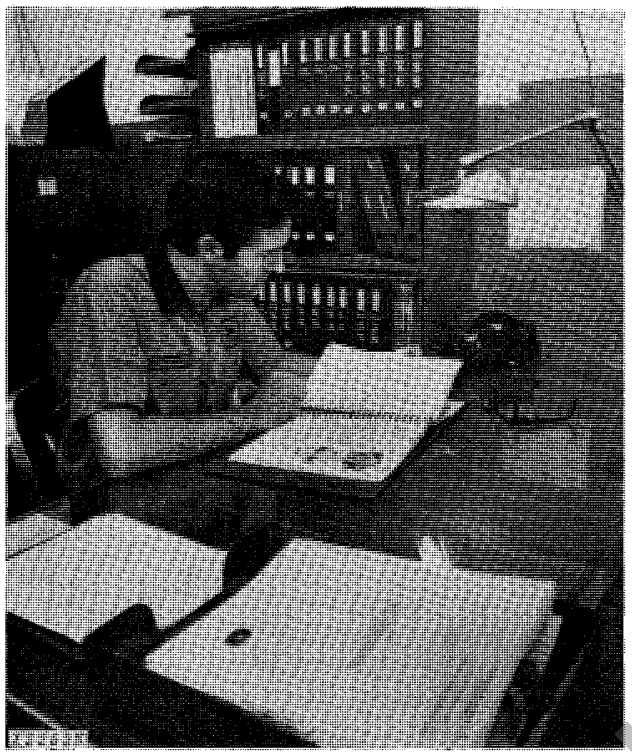

Use FOS Manuals for Reference

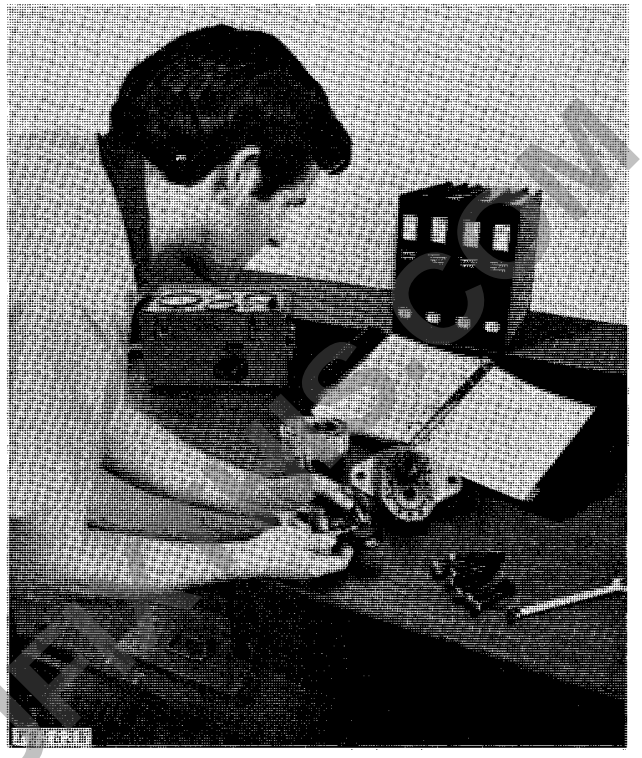

Use Technical Manuals for Actual Service

This technical manual is part of a twin concept of service:

- **FOS Manuals — for reference**
- **Technical Manuals — for actual service**

The two kinds of manuals work as a team to give you both the general background and technical details of shop service.

Fundamentals of Service (FOS) Manuals cover *basic* theory of operation, *fundamentals* of trouble shooting, *general* maintenance, and *basic* types of failures and their causes. FOS Manuals are for training new people and for reference by experienced people.

Technical Manuals are *concise* service guides for a *specific* machine. Technical Manuals are on-the-job guides containing only the vital information needed by a journeyperson mechanic.



When a serviceperson should refer to a FOS Manual for more information, a FOS symbol like the one at the left is used in the TM to identify the reference.

Some features of this technical manual:

- *Table of contents at front of manual*
- *Exploded views showing parts relationship*
- *Photos showing service techniques*
- *Specifications grouped for easy reference*

This technical manual was planned and written for you — a journeyperson mechanic. Keep it in a permanent binder in the shop where it is handy. Refer to it whenever in doubt about correct service procedures or specifications.

Using the technical manual as a guide will reduce error and costly delay. It will also assure you the best in finished service work.

⚠ This safety alert symbol identifies important safety messages in this manual. When you see this symbol, be alert to the possibility of personal injury and carefully read the message that follows.

Litho in U.S.A.

PREVIEW - YOUFIXTHIS.COM

Download full manual at youfixthis.com

Fuel System Malfunction—See Section 30
- Plugged fuel filters
- Improper fuel
- Faulty injection pump
- Faulty injection nozzles
- Faulty fuel pump
- Restricted air cleaner
- Restricted exhaust system
- Low intake manifold pressure
- Obstructed fuel line
- Faulty carburetor

Power Train Malfunction—See Section 50
- Clutch slipping

Engine Overheats

Basic Engine Problem—See This Section
- Defective head gasket
- Incorrect engine timing
- Crankcase oil level low
- Low coolant level
- Radiator or side grille screen dirty
- Loose or broken fan belt
- Faulty thermostat
- Cooling system limed up
- Defective radiator pressure cap
- Faulty water pump

Service Problem—See Section 10
- Engine overloaded
- Crankcase oil level low
- Improper fuel

Fuel System Malfunction—See Section 30
- Excessive fuel delivery
- Faulty carburetor

Excessive Oil Consumption

Basic Engine Problem—See This Section
- Restricted oil passage from valve cover
- Worn valve guides or valve stems
- Oil control rings worn or broken
- Scored liners or pistons
- Excessive ring groove wear in piston
- Rings sticking in grooves of piston
- Oil return holes in piston clogged
- Insufficient piston ring tension
- Piston ring gaps not staggered
- Excessive main or connecting rod bearing clearance
- Worn crankshaft thrust bearing (misaligned piston and rod)
- Front or rear crankshaft oil seal faulty
- Crankcase oil too thin
- Oil pressure too high
- Oil level too high

Service Problem—See Section 10
- Crankcase oil too thin
- Oil level too high

Fuel System Malfunction—See Section 30
- Restricted air intake

Low Oil Pressure

Basic Engine Problem—See This Section
- Excessive main and connecting rod bearing clearance
- Low oil level
- Leakage at internal oil passages
- Faulty oil pump
- Improper regulating valve adjustment
- Improper oil
- Defective engine oil cooler

Service Problem—See Section 10
- Low oil level
- Improper oil

Electrical System Malfunction—See Section 40
- Defective oil pressure indicator lamp
- Faulty oil pressure sending unit

High Oil Pressure

Basic Engine Problem—See This Section
- Stuck or improperly adjusted regulating valve

Excessive Fuel Consumption

Basic Engine Problem—See This Section
- Low compression
- Incorrect engine timing

Service Problem—See Section 10
- Engine overloaded

Fuel System Malfunction—See Section 30
- Leaks in fuel system
- Restricted air cleaner
- Faulty injection nozzles
- Faulty injection pump
- Faulty carburetor

Electrical System Malfunction—See Section 40
- Faulty ignition system

Black or Gray Exhaust Smoke

Basic Engine Problem—See This Section
- Incorrect engine timing

Service Problem—See Section 10
- Improper grade of fuel
- Engine overloaded

PREVIEW - YOUFIXTHIS.COM

Download full manual at youfixthis.com

Brush Assembly

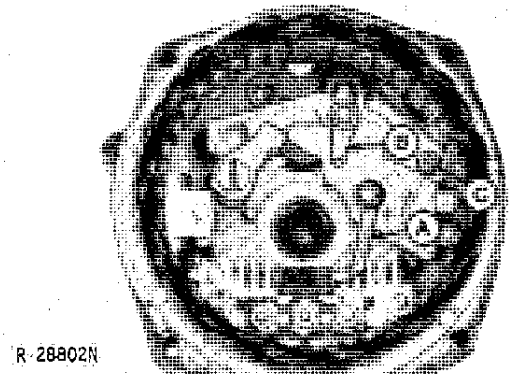

A—Brush Contact from Diode Trio
B—Brush Contact from Regulator
C—Regulator Ground Screw

Fig. 17—Checking Brushes for Grounds (72-Amp Alternator Shown)

A grounded brush assembly results in either no output or uncontrolled output, depending on where the ground is located.

Check insulating washers on screws holding both brush leads (A and B, Fig. 17). Replace if necessary. If circuit is grounded elsewhere, replace regulator.

A grounded brush assembly may also damage the diode trio. Before assembling alternator, check diode trio as instructed at right.

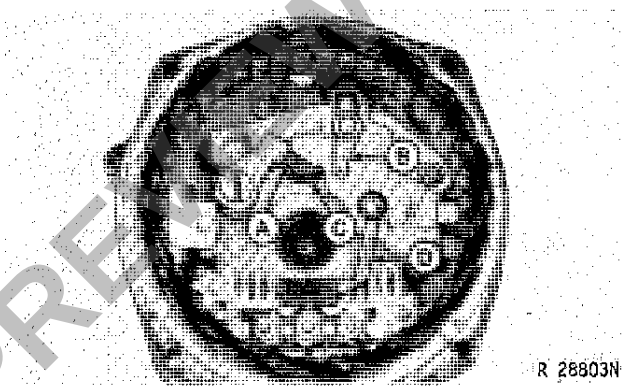

Fig. 18—Checking Brushes for Open Circuit (61 or 72-Amp Alternator)

Use an ohmmeter or test lamp to test for continuity between points A and B, Fig. 18 or 19. Also check between points C and D. Replace brush assembly if either check does not show continuity.

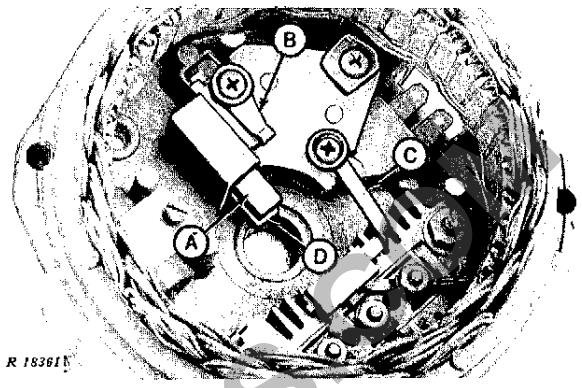

Fig. 19—Checking Brushes for Open Circuit (37 or 55-Amp Alternator)

Diode Trio

To check the diode trio, first remove the stator, then remove the attaching screw and the diode trio, noting the insulator positions.

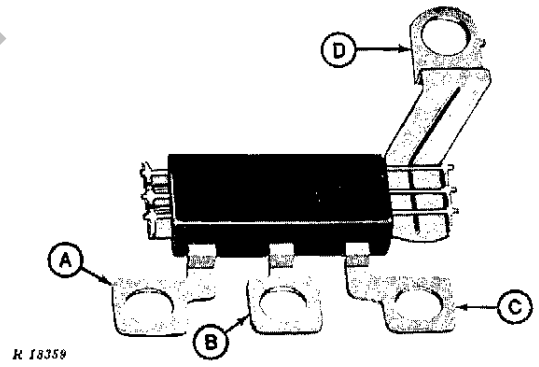

Fig. 20—Checking Diode Trio

Use an ohmmeter or test lamp to test for continuity between points A and D, Fig. 20. Then reverse leads and test for continuity between same points in opposite direction. A good diode trio will have continuity in one direction only.

Repeat tests between points B and D and between points C and D. Replace diode trio unless tests show continuity in only one direction in each case.

PREVIEW - YOUFIXTHIS.COM
Download full manual at youfixthis.com

Group 25
DIFFERENTIAL

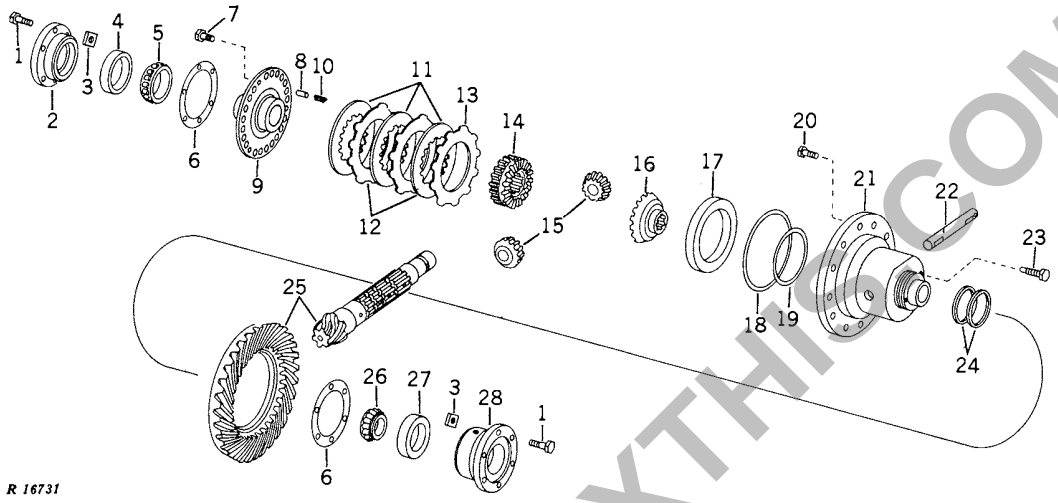

1—Special Cap Screw (12 used)
2—Left-Hand Bearing Quill
3—Square Nut (2 used)
4—Bearing Cup
5—Bearing Cone
6—Shim (use as required)
7—Special Cap Screw (12 used)
8—Spring Pin (3 used)
9—Differential Housing Cover
10—Spring (3 used)
11—Drive Disk (3 used)
12—Separator Plate (2 used)
13—Backing Plate
14—Bevel Lock Gear
15—Bevel Pinion (2 used)
16—Bevel Gear
17—Piston
18—Packing
19—O-ring
20—Special Cap Screw (12 used)
21—Differential Housing
22—Bevel Pinion Shaft
23—Special Cap Screw
24—Sealing Ring (2 used)
25—Ring Gear and Pinion
26—Bearing Cone
27—Bearing Cup
28—Right-Hand Bearing Quill

Fig. 1—Differential Parts (Differential Lock Illustrated)

GENERAL INFORMATION

The tractor may be equipped with a hydraulically-operated differential lock. If not so equipped, follow only the appropriate parts of the following information.

REMOVAL

NOTE: Before separating a tractor with Perma-Clutch or working on the differential, remove the hexagonal drive shaft (Fig. 2) that extends from the flywheel through the transmission pump to the rear of the transmission case. Protect machined end of rod from damage and remove from the rear using a small pliers. Removing shaft prevents bending or damage during disassembly and assembly.

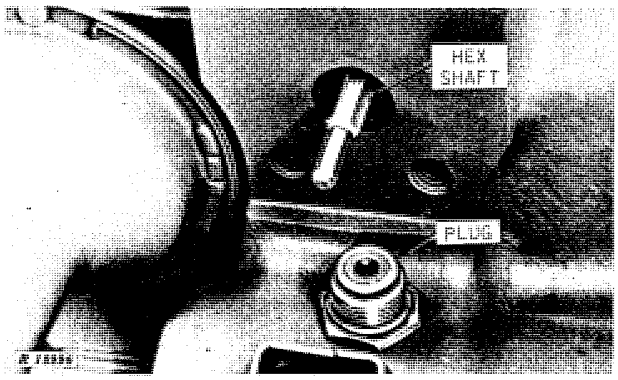

Fig. 2—Removing Hex. Shaft

PREVIEW: YOUFIXTHIS.COM
Download full manual at youfixthis.com

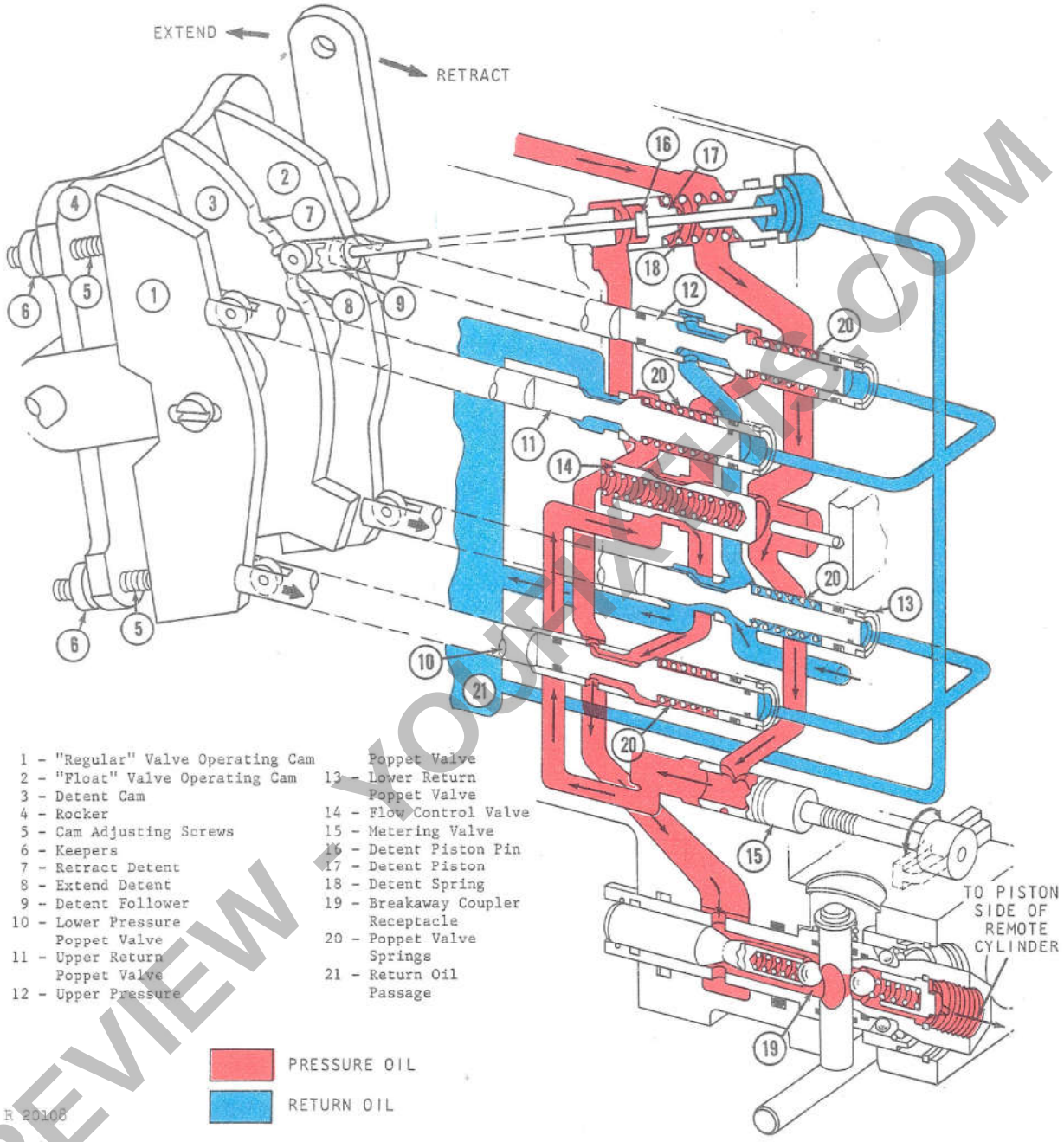

Fig. 3—Selective Control Valve

PREVIEW - YOUFIXTHIS.COM

Download full manual at youfixthis.com

REMOVAL

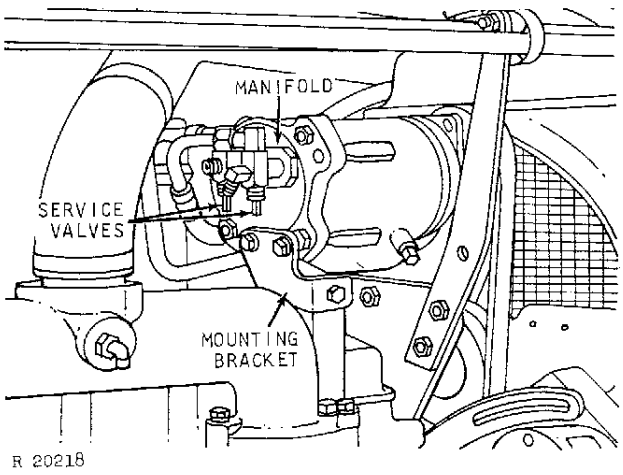

Fig. 10–Compressor Mounting

If the compressor is operable, operate for 10 minutes by running engine at 1900 rpm with temperature control set for maximum cooling and blower speed on high position, before removing compressor. This allows the refrigerant oil to be circulated in the system and more nearly gives the correct quantity of oil in the compressor.

Shut-off engine and discharge refrigerant from system as instructed in DISCHARGING THE SYSTEM.

NOTE: When removing compressor only, the compressor may be discharged without discharging the remaining part of the system. Remove the service valve caps and slowly turn each service valve adjusting stem to the front-seated position (Fig. 7). Discharge compressor (page 80-10-7).

1. Slowly loosen the screw that connects the compressor manifold to the compressor (Fig. 10).

⚠ CAUTION: High pressure may still exist at the discharge fitting. If this pressure is released too rapidly, there may be a considerable discharge of refrigerant and oil.

2. Remove the compressor manifold and plug openings with caplugs, after all the pressure has been relieved.

3. Cover compressor openings immediately with a coverplate to protect O-rings and prevent entry of moisture and dirt into compressor.

4. Disconnect compressor clutch coil wires and remove the compressor drive belt.

5. Remove compressor from the mounting bracket. Drain and measure oil from compressor.

REPAIR

The compressor should be tested for leaks before starting disassembly. Refer to LEAK TESTING COMPRESSOR, page 80-10-18.

A compressor that has an internal leak (discharge to suction side), will require replacement or rebuilding. External leaks can usually be corrected by installing a new shaft seal assembly.

Major repairs or testing should be done only by a qualified refrigeration serviceman who has the necessary tools and equipment.

Removing Compressor Hub and Drive Plate Assembly

1. Mount the compressor vertically in a holding fixture (Fig. 11). The holding fixture may be purchased commercially, or can be made in the shop.

2. Using the clutch holding wrench (KD-2018), hold the clutch hub while removing the hub and drive plate lock nut from the compressor shaft (Fig. 11).

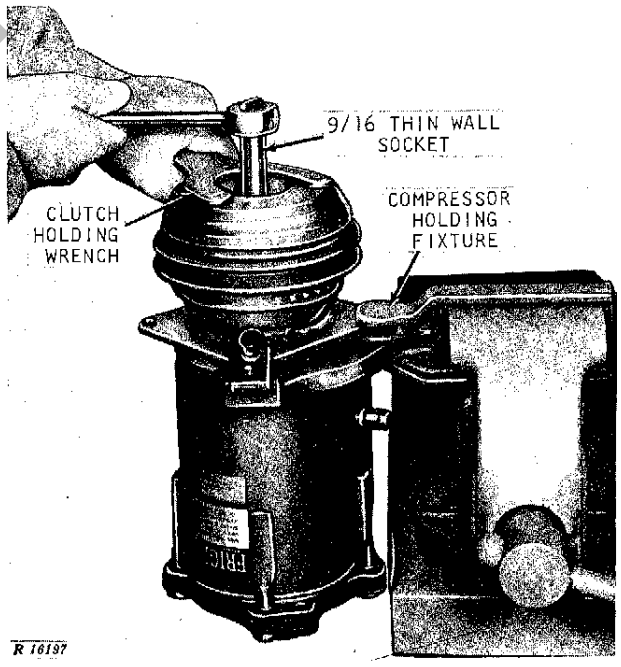

Fig. 11–Removing Lock Nut

3. Using a threaded hub puller (KD-2016A) remove the hub and drive plate assembly (Fig. 12). Remove the hub pulling tool.

4. Remove hub and drive plate retainer ring and spacer (Fig. 13).

PREVIEW - YOUFIXTHIS.COM
Download full manual at youfixthis.com

Step	*Result*
(38) Use two flat washers to crimp a heater hose shut with locking pliers as shown: Repeat temperature drop check as in Step 37. 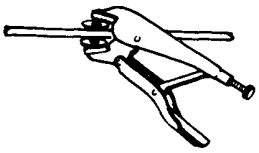 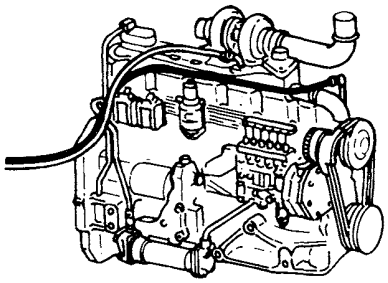	In Spec.: **GO TO 39** Out of Spec.: **GO TO 40**
(39) Heater valve is internally leaking or heater hoses are reversed. 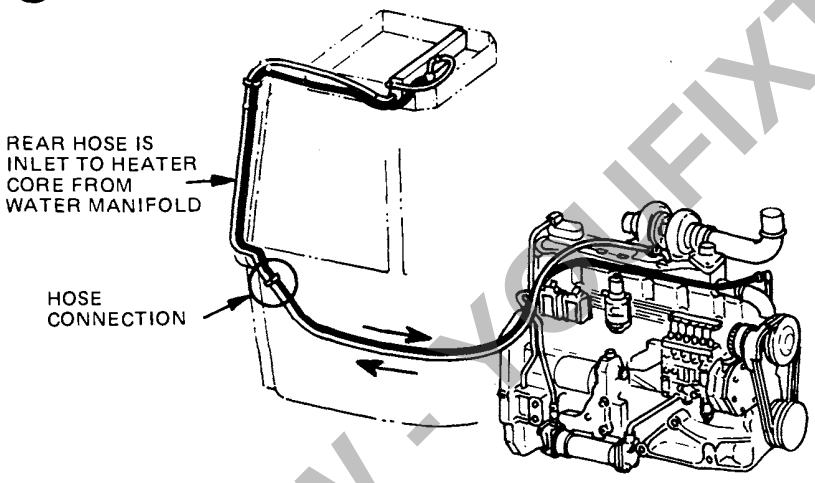	Repair. Then... **GO TO 37**
(40) Check door, windows, panels and seams of SGB for air leakage. 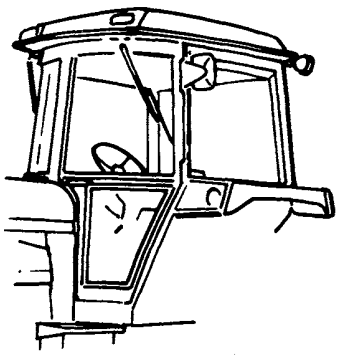	No Leaks: **GO TO 41** Leaks: Repair. Then... **GO TO 37**
(41) Lack of cooling can be caused by dirty components. Check the following: 1. Recirculating filter 2. Blower air duct and fan cage 3. Condenser 4. Radiator (or) 5. Evaporator NOTE: Check for damaged cooling fins of condenser, radiator and evaporator.	Not Dirty: **GO TO 42** Dirty: Clean. Then... **GO TO 37**

R33782

PREVIEW - YOUFIXTHIS.COM
Download full manual at youfixthis.com

Section 20
ENGINE

CONTENTS OF THIS SECTION

Page

GROUP 5—GENERAL INFORMATION AND DIAGNOSIS
- General Information 5-2
- Diagnosing Engine Malfunctions 5-2

GROUP 10—CYLINDER HEAD, VALVES, CAMSHAFT, AND TIMING GEARTRAIN
- General Information 10-1
- Diagnosing Malfunctions 10-1
- Preliminary Valve Checks 10-1
- Cylinder Head and Valves
  - Removal and Repair 10-2
  - Assembly and Installation 10-3
  - Valve Clearance Adjustment 14-4
- Camshaft
  - Removal 10-4
  - Repair 10-5
  - Installation 10-5
- Timing Gear Train 10-6
- Removal 10-6
- Inspection and Repair 10-6
- Assembly and Installation 10-7

GROUP 15—CYLINDER BLOCK, LINERS, PISTONS AND RODS
- General Information 15-1
- Diagnosing Malfunctions 15-1
- Removal 15-2
- Repair
  - Pistons 15-2
  - Liners 15-3
  - Rods 15-4
- Assembly 15-4
- Installation 15-5

GROUP 20—CRANKSHAFT, MAIN BEARINGS, AND FLYWHEEL
- General Information 20-1
- Checking End Play 20-1
- Diagnosing Malfunctions 20-1
- Removal 20-1
- Inspection and Repair
  - Crankshaft and Flywheel 20-1
  - Clutch Shaft Pilot Bushing Adapter 20-2
  - Main Bearings and Journals 20-2
  - Damper Pulley 20-3
  - Rear Crankshaft Oil Seal, Housing, Flywheel, and Wear Sleeve 20-3
  - Front Oil Seal and Wear Sleeve 20-3
- Assembly 20-3

Page

GROUP 25—LUBRICATION SYSTEM
- General Information 25-1
- Diagnosing Malfunctions 25-1
- Checking Oil Pressure 25-1
- Adjusting Oil Pressure 25-1
- Oil Pump
  - Removal 25-1
  - Inspection and Repair 25-2
  - Assembly and Installation 25-2
- Oil Pressure Regulating Valve 25-3
- Oil Filter 25-3
- Oil Cooler 25-3

GROUP 30—COOLING SYSTEM
- General Information 30-1
- Diagnosing Malfunctions 30-1
- Radiator and Fan 30-1
- Water Pump 30-1
- Water Manifold and Thermostats 30-2

GROUP 35—GASOLINE ENGINE GOVERNOR
- General Information 35-1
- Diagnosing Malfunctions 35-1
- Removal 35-1
- Repair 35-1
- Assembly 35-2
- Adjustment 35-3

GROUP 40—SPECIFICATIONS
- Cylinder Head, Valves, and Camshafts 40-1
- Cylinder Block, Liners, Pistons, and Rods 40-2
- Crankshaft, Main Bearings and Flywheel 40-2
- Lubrication System 40-2
- Cooling System 40-3
- Gasoline Engine Governor 40-3
- Special Tools 40-4
- Engine Break-In 40-4

Litho in U.S.A.

PREVIEW - YOUFIXTHIS.COM

Download full manual at youfixthis.com

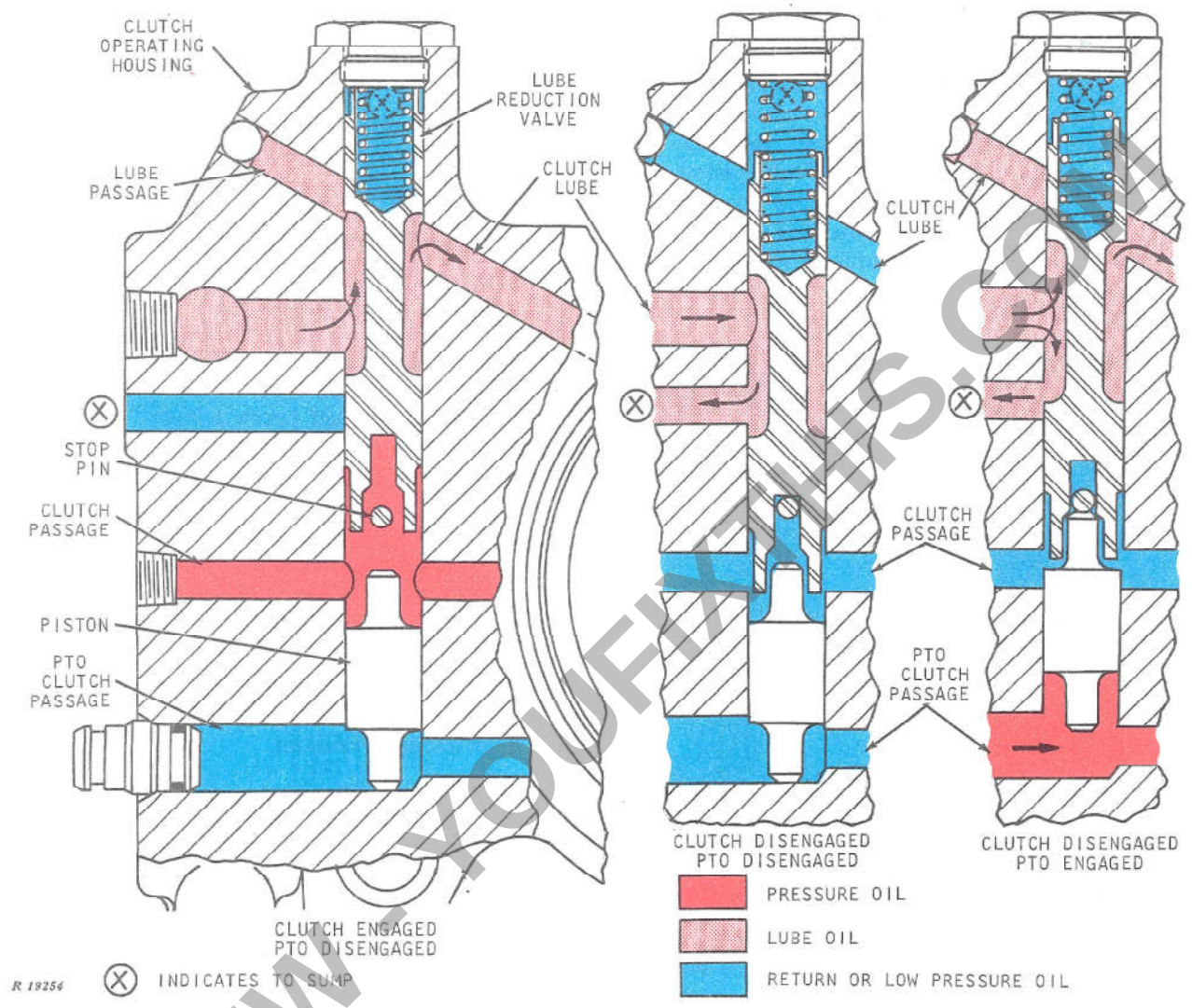

Fig. 6—Lubrication Reduction Valve Operation

Lubrication Reduction Valve

The lubrication reduction valve located in the clutch operating bearing housing assists shifting (particularly with cold, thick oil) by reducing the lubrication oil flow when the clutch is disengaged.

Fig. 6 shows the lubrication reduction valve in three different positions. On the left side of the illustration the transmission clutch is engaged and the PTO clutch is disengaged. Pressure oil to the clutch operating piston pushes the lubrication reduction valve up against spring pressure, routing the entire lubrication flow to the clutch disks for cooling. Metering holes in the PTO clutch hub provide approximately 2 gpm to the PTO clutch for cooling. The remainder of the flow (6 gpm) is routed to the transmission clutch disk through the large hole in the PTO clutch hub. The PTO clutch is not engaged and the lubrication flow will produce a slight drag, which is not detrimental since the PTO brake is engaged.

If the PTO were engaged while the clutch was engaged (position not shown), the piston could move up against the stop pin or assume an intermediate position between the two clutch passages, without affecting the lubrication flow to either clutch.

In the center of Fig. 6, both the transmission clutch and the PTO clutch are disengaged. The spring forces the lubrication reduction valve down, routing all lubrication oil to sump instead of cooling the clutch disks. This reduces clutch drag and eases shifting.

PREVIEW YOUFIXTHIS.COM
Download full manual at youfixthis.com

REPAIR

If the transmission drive shaft (Fig. 10) must be disassembled, remove snap ring from rear end of transmission drive shaft and use a press or a puller to remove rear bearing cone.

Be sure that oil passages in all shafts are open and free of dirt and sludge. Plugged oil passages will result in excessive wear of parts.

Use Fig. 10 for identification of parts and as a guide for disassembly and assembly of the parts on the transmission drive shaft. The blockers are equipped with spring loaded detent balls so exercise care to avoid losing the balls during disassembly.

Use special tool cone JDT-4 to load springs and balls into blocker (Fig. 9). Transfer loaded blocker assembly to its drive collar.

After pressing bearing cones on to transmission drive shaft, install the thickest snap ring that will fit properly in each groove. Transmission drive shaft is now ready for installation in transmission case.

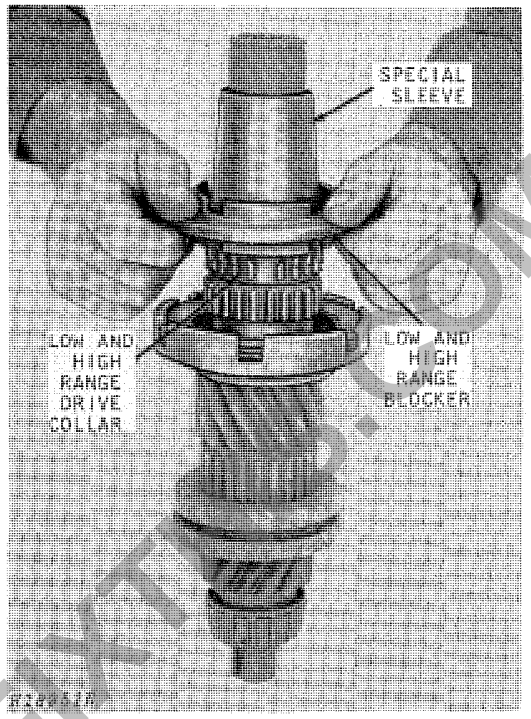

Fig. 9–Installing Low and High Range Blocker

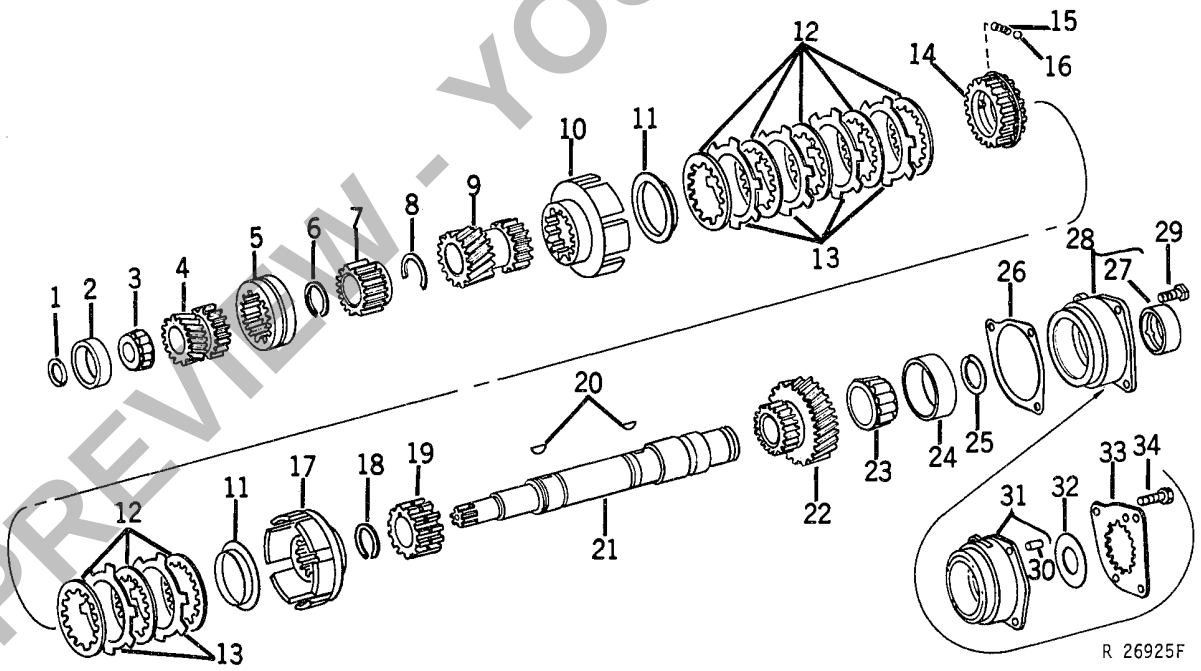

1–Snap Ring
2–Bearing Cup
3–Bearing Cone
4–Reverse Range Pinion
5–Reverse Range Shifter Collar
6–Snap Ring
7–Reverse Range Drive Collar
8–Snap Ring
9–Low Range Pinion
10–Low Range Drum
11–Retainer (2 used)
12–Disk (8 used)
13–Plate (6 used)
14–Blocker
15–Spring (4 used)
16–Ball (4 used)
17–High Range Drum
18–Snap Ring
19–Drive Collar
20–Woodruff Key (2 used)
21–Transmission Drive Shaft
22–High Range Pinion
23–Bearing Cone
24–Bearing Cup
25–Snap Ring
26–Shim (use as required)
27–Bushing
28–Front Bearing Housing
29–Special Cap Screw (3 used)
*30–Dowel Pin (2 used)**
*31–Front Bearing Housing**
*32–Thrust Washer**
*33–Shifter Collar Plate**
*34–Special Cap Screw (3 used)**
**–Creeper Transmission*

Fig. 10–Transmission Drive Shaft Parts (Late Model)

Litho in U.S.A.

PREVIEW - YOUFIXTHIS.COM
Download full manual at youfixthis.com

Group 30
FINAL DRIVE

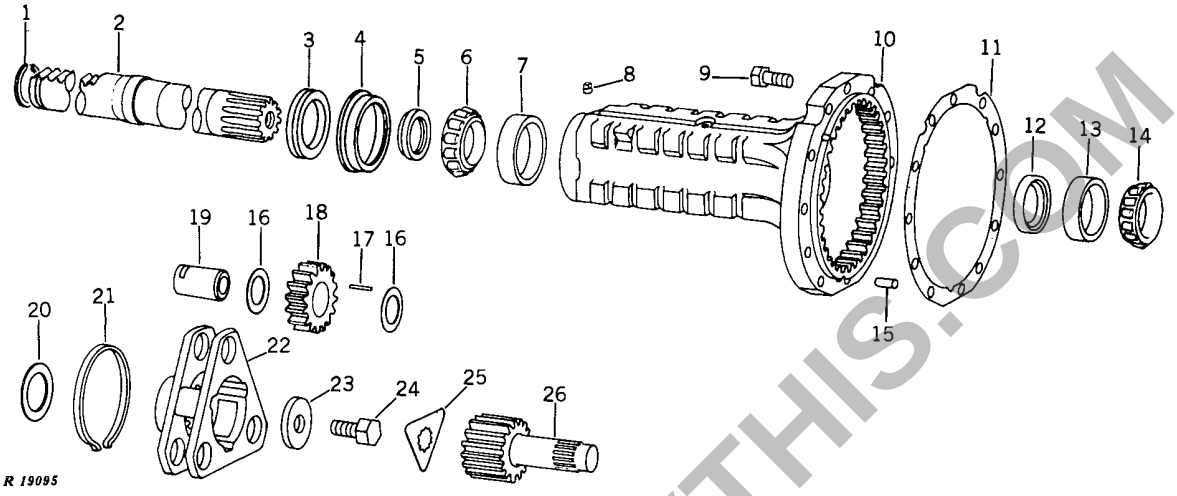

1—Snap Ring
2—Rear Axle Shaft
3—Oil Seal
4—Oil Seal Cup
5—Spacer
6—Bearing Cone
7—Bearing Cup
8—Pipe Plug
9—High-Strength Cap Screw (12 used)
10—Rear Axle Housing with Gear
11—Gasket
12—Oil Seal
13—Bearing Cup
14—Bearing Cone
15—Dowel Pin (3 used)
16—Thrust Washer (6 used)
17—Bearing Roller (99 used)
18—Planet Pinion (3 used)
19—Planet Pinion Shaft (3 used)
20—Thrust Washer
21—Snap Ring
22—Planet Pinion Carrier
23—Washer
24—Special Hex. Bolt
25—Lock Plate
26—Final Drive Shaft and Sun Pinion

Fig. 1—Final Drive Parts

GENERAL INFORMATION

Each final drive unit contains one rear axle mounted on two tapered roller bearings with oil seals, and a planetary gear system which provides the final speed reduction.

REMOVAL

See Section 10, Group 25 for instructions.

REPAIR

Be sure to remove lock plate (25, Fig. 1) before attempting to remove special hex. bolt (24).

Remove planet pinion carrier assembly from splined end of rear axle shaft.

Each planet pinion shaft can be removed as snap ring is expanded to clear groove in planet carrier. Avoid losing any of the bearing rollers which are used in each planet pinion. Replace rollers in sets.

To remove axle, press out of rear axle housing with housing supported outside of oil seal circumference to avoid damaging outer oil seal.

If the final drive gear in the rear axle housing is damaged or worn, the gear and rear axle housing must be replaced as an assembly.

Check inner oil seal for damage or evidence of excessive leakage, and replace if necessary. Install with sealing lip spring toward oil compartment.

ASSEMBLY

If bearing cone (6, Fig. 1) or spacer (5) require replacement, heat new parts in hot oil not to exceed 300°F and drive into place on shaft while hot.

When assembling planet pinion carrier, be sure that snap ring is properly seated in groove on planet pinion carrier.

PREVIEW - YOUFIXTHIS.COM
Download full manual at youfixthis.com

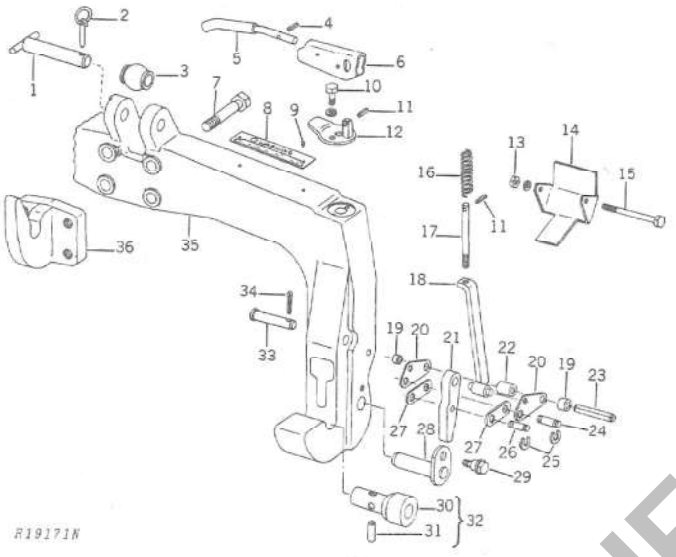

1–Pin
2–Quik-Lock Pin
3–Ball
4–Spring Pin (2 used)
5–Handle (2 used)
6–Lever (2 used)
7–Cap Screw (4 used)
8–Plate
9–Screw (2 used)
10–Cap Screw (4 used)
11–String Pin (4 used)
12–Bracket (2 used)
13–Nut (2 used)
14–Shield (2 used)
15–Cap Screw (2 used)
16–Spring (2 used)
17–Rod (2 used)
18–Bar (2 used)
19–Spacer (4 used)
20–Link (4 used)
21–Latch (2used)
22–Spacer (2 used)
23–Spring Pin (2 used)
24–Pin (2 used)
25–Retaining Ring (8 used)
26–Pin (2 used)
27–Link (4 used)
28–Pin (2 used)
29–Cap Screw (2 used)
30–Adapter (2 used)
31–Spring Pin (2 used)
32–Adapter (2 used)
33–Pin (2 used)
34–Cotter Pin (2 used)
35–Frame
36–Hook

Fig. 35–Heavy-Duty Quik-Coupler

POWER WEIGHT-TRANSFER HITCH

General Information

The power weight-transfer hitch consists of a pressure gauge, special rockshaft piston cover, control valve, coupler, double-acting remote cylinder (used as a single-acting cylinder), and transfer link.

The two-way directional control valve and pressure gauge are plumbed into the special rockshaft piston cover. The hitch then uses the load sensing portion of the rockshaft valve assembly during weight-transfer operation.

The coupler is connected to the draft links.

The remote cylinder is connected to the coupler at the cylinder end and to the center link pivot bracket at the rod end. The hose opposite the stop rod bracket is attached to the control valve. The other hose is connected to a receptacle in the load control arm adjustment opening.

The telescoping transfer link is attached to the top of the coupler and to the implement.

Operation

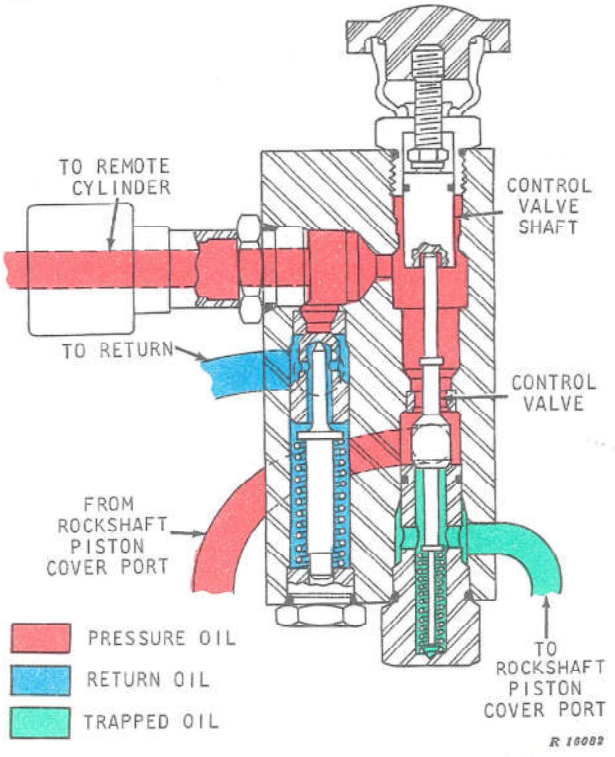

Fig. 36–Control Valve Operation

PREVIEW - YOUFIXTHIS.COM
Download full manual at youfixthis.com

The evaporator is where the actual cooling and drying of warm, moist cab air takes place. The flow of refrigerant entering the evaporator is regulated by a diaphragm-type valve, called an expansion valve. This valve uses an orifice to reduce the flow of high pressure liquid refrigerant into the evaporator, causing the refrigerant pressure and temperature to drop.

Warm cab air, pulled over the evaporator by the pressurizer blowers, gives up its heat to the cooler refrigerant, thereby cooling the air and causing the refrigerant to boil, or vaporize. Because the pressure in the evaporator is low, the boiling point of the refrigerant is also low.

Moisture (in the air) is collected on the evaporator core during the cooling process and drained away. With the cab air cooled and dehumidified, the desired effect has been produced and the cycle is now complete.

The expansion valve and a thermostatic temperature control switch are the two controls used in the air conditioning system to maintain the proper cooling balance.

A temperature sensing bulb is connected to the expansion valve by means of a capillary tube filled with a low pressure gas. The sensing bulb is clamped to the evaporator outlet pipe and is well insulated from external heat sources. Too little or too much refrigerant passing through the expansion valve into the evaporator, will limit the cooling efficiency of the system.

If too little refrigerant passes through the expansion valve, the refrigerant gas will become too hot, permitting the gas in the sensing bulb to expand enough to open the expansion valve.

If too much liquid refrigerant passes through the expansion valve, some of the liquid will still be vaporizing as it leaves the evaporator. This lowers the temperature at the outlet, which in turn lowers the temperature of the gas in the sensing bulb and allows the expansion valve to close.

The thermostatic temperature control switch is a rotary type switch that is connected to a temperature sensing tube inserted in the evaporator core. The switch end of the gas-filled sensing tube has a diaphragm which controls two external contacts wired to the compressor clutch. When the cab air needs to be cooled, corresponding to the preselected control setting, the compressor will turn on. The compressor will continue to function until the selected temperature is reached.

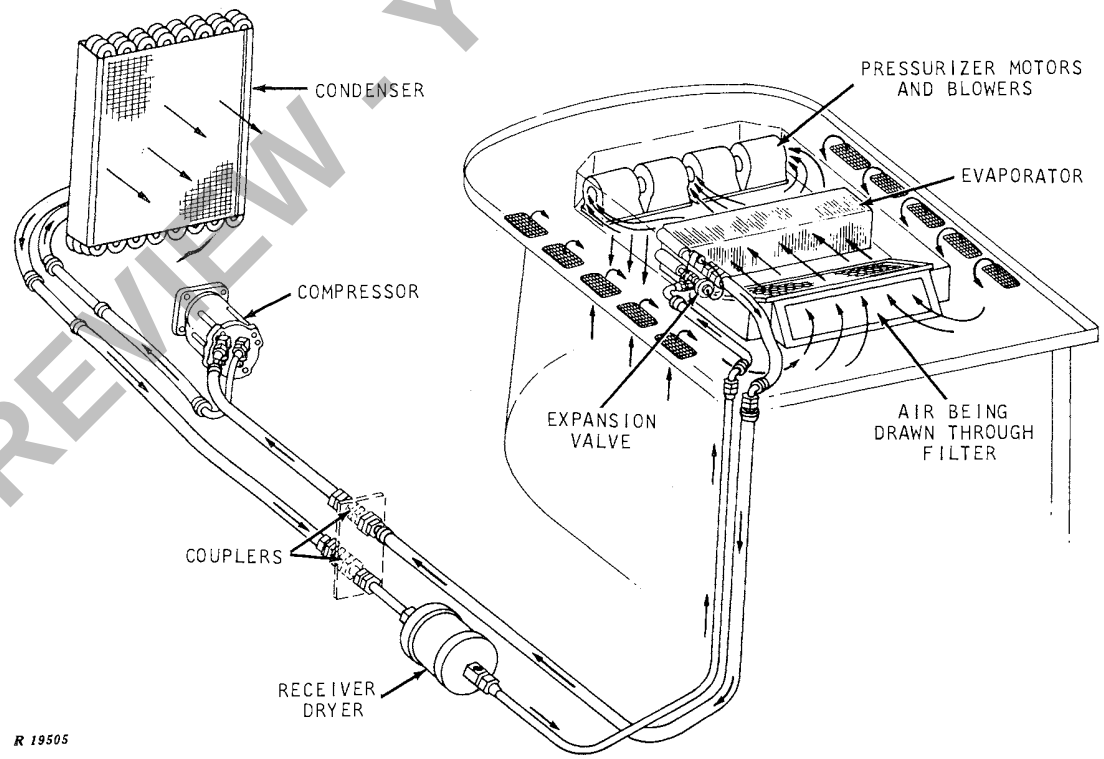

Fig. 2—Air Conditioning System

PREVIEW - YOUFIXTHIS.COM
Download full manual at youfixthis.com

PREVIEW ONLY

You're viewing 18 of 580 pages

The full manual includes:

- All 580 pages, complete
- Searchable PDF (find any keyword)
- No watermarks
- Instant download
- Print-ready quality

GET FULL MANUAL NOW

John Deere 4030 Technical Manual

Scan or click anywhere
youfixthis.com

Click anywhere on this page to get the full manual