1 Component Check

NOTE: For component location and wiring information, see the following:

- *See Cab Harness (W5) Component Location. (Group 9015-10)*
- *See Cab Harness (W5) Wiring Diagram. (Group 9015-10)*
- *See Transmission Harness (W7) Component Location. (Group 9015-10)*
- *See Transmission Harness (W7) Wiring Diagram. (Group 9015-10)*

Turn key switch OFF.

Disconnect the following sensors.

Sensor Reference Voltage Check		
Sensor and Harness Location	**Pin (Sensor Connector)**	**Wire**
TCL Sensor (B2) (W5)	A	T01 BLU
Right Motor Speed Sensor (B3) (W7)	A	T03 BLU
Transmission Speed Control Sensor (B4) (W5)	A	T07 BLU
Steer Sensor (B5) (W5)	A	T10 BLU
Charge Pressure Sensor (B33) (W7)	B	T20 BLU
Decelerator Sensor (B1) (W5)	A	T05 BLU
Engine Speed Control (R10) (W5)	A	T08 BLU
Left Motor Speed Sensor (B7) (W7)	A	T18 BLU

Turn key switch ON.

Check for voltage at the sensor pins listed in the table.

Is voltage 4.8 volts or less?

YES: Short to ground on circuit with less than 4.8 volts.

NO: Go to Code Check.

RH60123,0000765 -19-26AUG15-3/4

2 Code Check

Check for active codes. See Transmission Control Unit (TCU) Menu Structure. (Group 9015-20.)

Are there any active codes that correspond to the previous sensors in the table?

YES: Go to Diagnostic Trouble Code (DTC) Quick Reference List—Transmission Control Unit (TCU). (Group 9001-30.)

NO: Checks complete.

RH60123,0000765 -19-26AUG15-4/4

F314 — Sensor Supply Short to Power

The sensor supply voltage is greater than 5.5 volts.

RH60123,0000766 -19-26AUG15-1/4

Sensor Supply Short to Power Diagnostic Procedure

Continued on next page

RH60123,0000766 -19-26AUG15-2/4

PREVIEW - YOUFIXTHIS.COM

Download full manual at youfixthis.com

System Functional Schematic Diagram

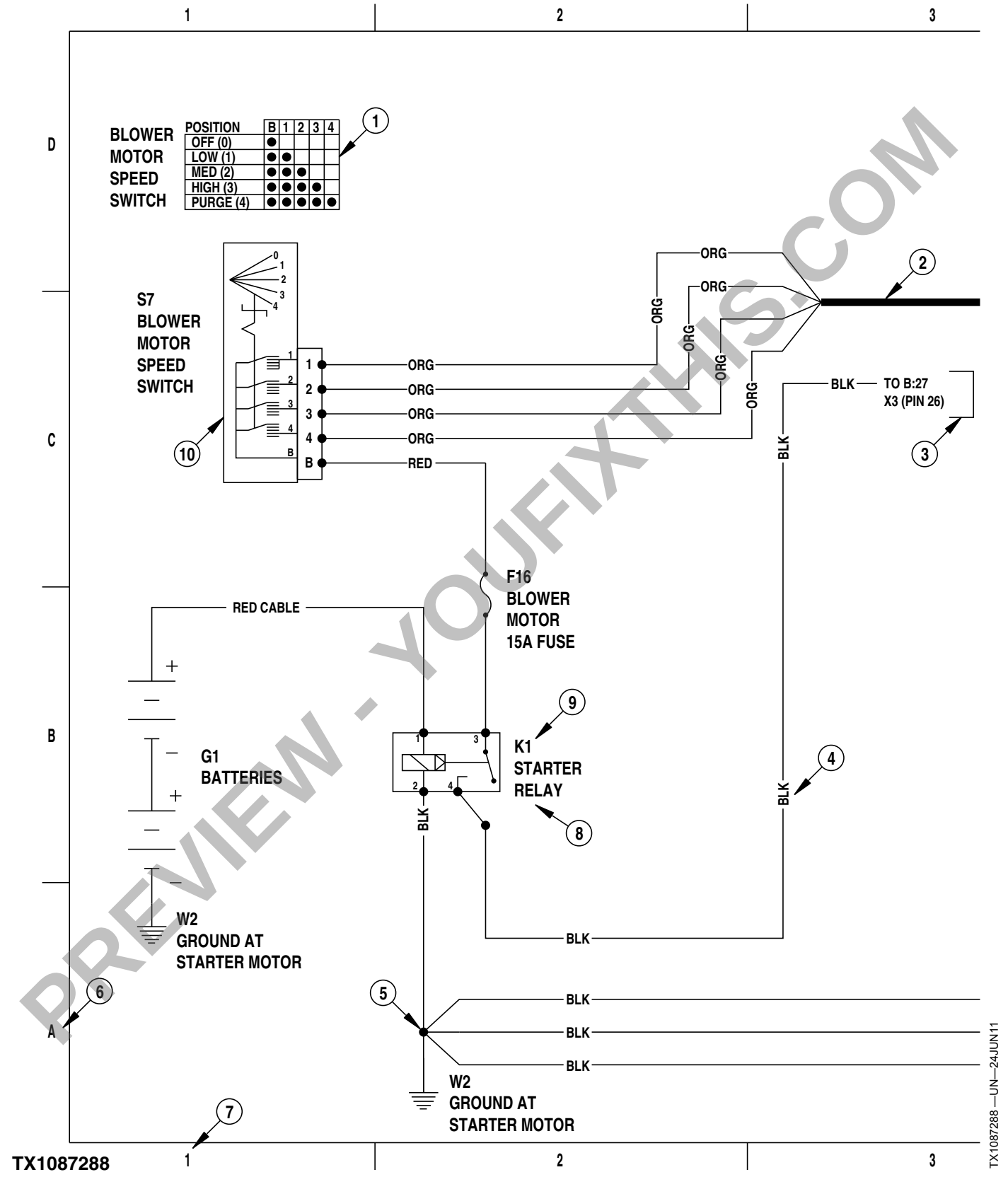

System Functional Schematic Diagram

Continued on next page

KK70125,00005B4 -19-16FEB11-2/4

PREVIEW - YOUFIXTHIS.COM

Download full manual at youfixthis.com

Wiring Diagram

7 END #1	8 NUMBER	9 COLOR	10 END #2
V11	A06	ORG	X144
Y16	A06A	ORG	X144
X4	A06B	ORG	X144
G3/G4	B01	RED	M1
X49	E05	WHT	X4
X49	E06	GRY	X4
X49	E07	GRN	X4
X49	E08	ORG	X4
X49	E09	BLU	X4
X49	E10	BRN	X4
X38	E13	WHT	X4
Y35	E15	RED	X147
Y36	E15A	RED	X147
X4	E15B	RED	X147
G3/G4	G03	BLK	W27
W27	G03A	BLK	X148
V11	G03B	BLK	X148
Y16	G03C	BLK	X148
X145	G03D	BLK	W27
X37	H13	GRN	X4
G3/G4	J08	TAN	X4
B4	M03	PUR	X4
B3	M04	PUR	X4
B19	M06	PUR	X4
B23	N02	YEL	X4

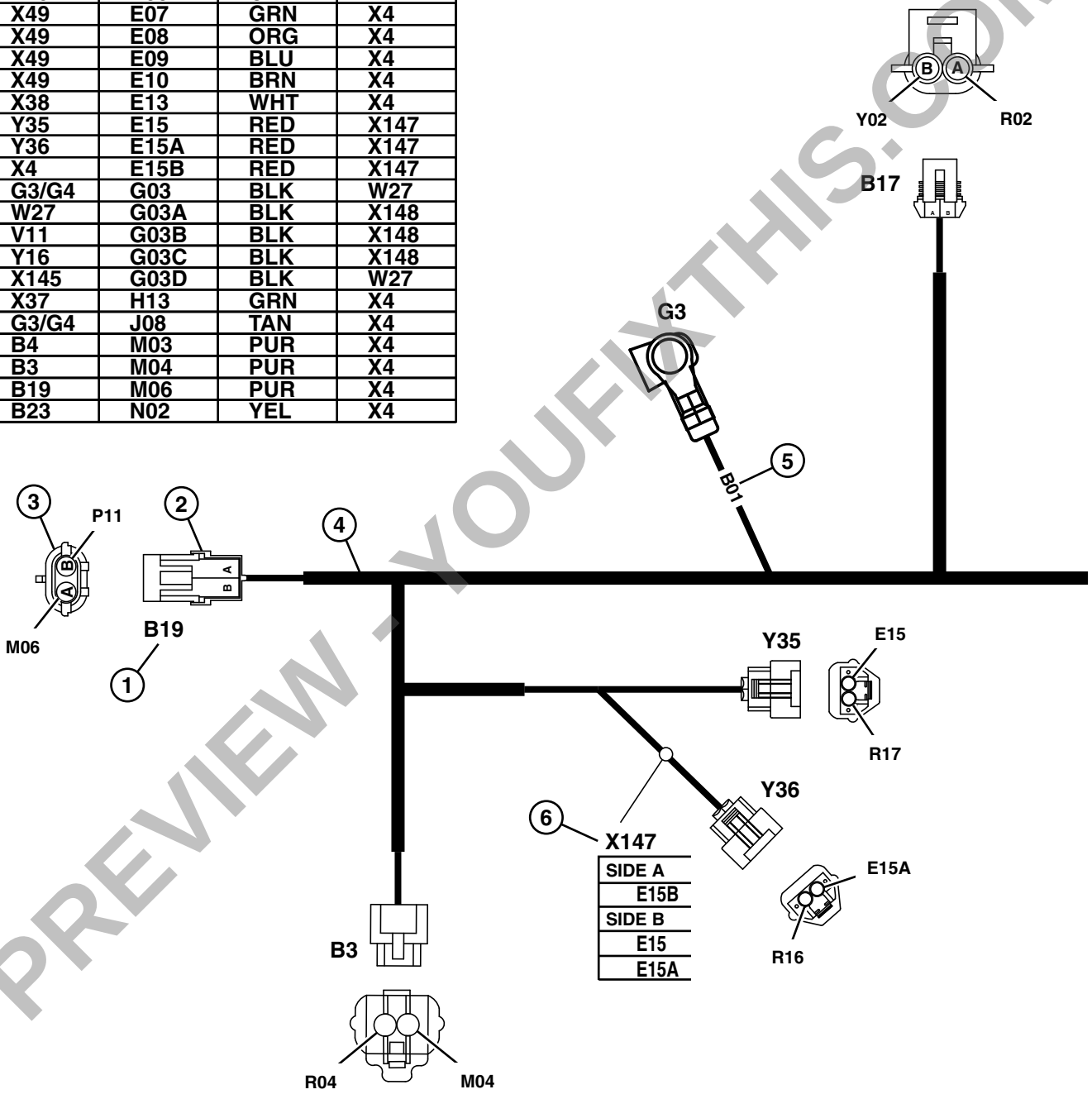

TX1088140

TX1088140 —UN—18FEB11

Wiring Diagram Example

KK70125,00005B4 -19-16FEB11-4/4

PREVIEW - YOUFIXTHIS.COM
Download full manual at youfixthis.com

Hydraulic System Schematic

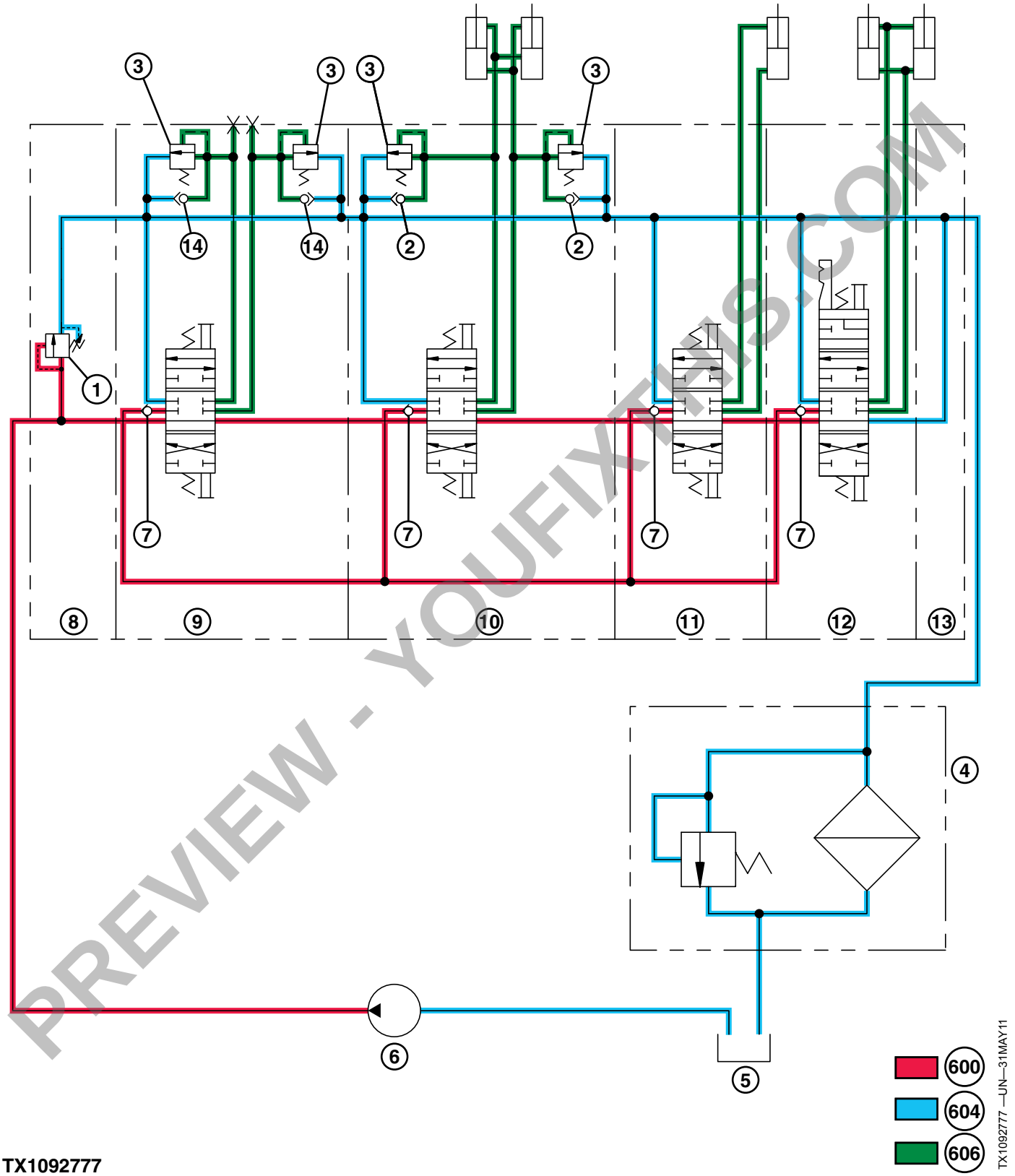

TX1092777

Hydraulic System Schematic—Neutral

Continued on next page

MR50960,0000037 -19-06JUL17-1/2

PREVIEW - YOUFIXTHIS.COM
Download full manual at youfixthis.com

Transmission Control Unit (TCU) Calibration

SPECIFICATIONS	
Transmission Oil Temperature	55—65°C 135—150°F
Charge Oil Pressure	2172—2655 kPa 21.7—26.6 bar 315—385 psi
Low Speed Cal Target Motor Speed	2100 rpm

Recalibrate whenever transmission components are adjusted or replaced.

A pump null adjustment must be made before calibration following pump repair. See Pump Displacement Control Valve (PDCV) Neutral (Null) Adjustment. (Group 9026-25.)

NOTE: Do this procedure on level ground with enough room to accelerate to full speed for approximately 46—61 m (150—200 ft.), or with machine off ground supported by blocks.

1. Remove TCU cover.
2. Record diagnostic trouble codes and the number of occurrences and clear all stored diagnostic trouble codes. See Diagnostic Trouble Codes (DTC) Quick Reference List. (Group 9015-20.)

Check any active DTCs per following procedure before attempting calibration:

- If the last digit of the diagnostic trouble code number is (0, 2, 3, or 5), an open circuit, shorted circuit, or no feed back is indicated. **Do not attempt calibration**.
- If the last digit of the diagnostic trouble code number is (6, 7, 8, or 9), **it indicates an incorrect calibration or a component failure**.
- If diagnostic trouble code 311, 314, 321, or 324 is displayed **do not calibrate**.
- If the last digit of the diagnostic trouble code number is (1 or 4), a calibration error or circuit failure is indicated. Access main menu and select **DIAG** in Transmission Control Unit. Compare calibrated values to real time values. **If values do not match, recalibrate**.

3. Start engine and run at slow idle.

   The TCU window will scroll a machine ID number, software version, followed by **PARK** being displayed. The green **POWER** light will be illuminated and the red **STATUS** light will be unlit, unless an active diagnostic trouble code is displayed.

4. Warm machine to normal operating temperature.

Specification

Transmission Oil—Temperature.....55—65°C
135—150°F

NOTE: The park lock lever must be up in locked position and transmission control lever (TCL) in neutral so charge pressure can be read correctly.

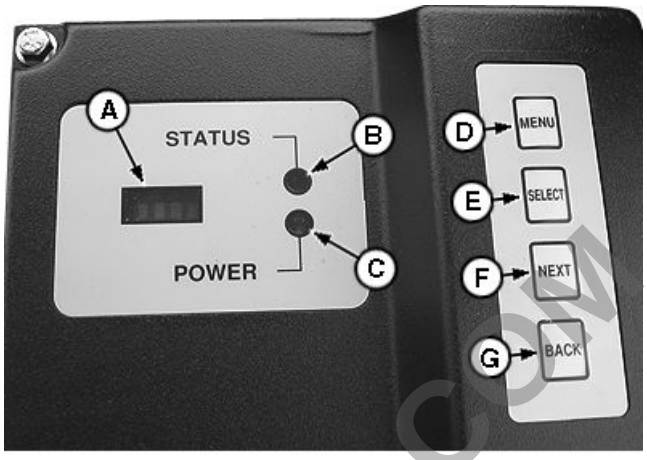

TX1012349A —UN—21SEP06

Transmission Control Unit (TCU)

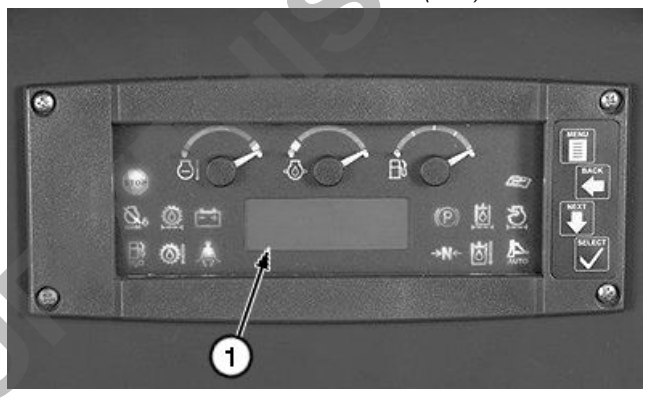

TX1033227A —UN—11DEC07

Monitor Display Unit

1— Monitor Display Unit (MDU)

5. Pull park lock lever up and move TCL to neutral.

   Check for charge pressure on TCU. Press **MENU** until **DIAG** is displayed.

   Press **SELECT**. If charge pressure is low, see High/Low Charge Pressure Malfunctions. (Group 9026-15.)

Specification

Charge Oil—Pressure..... 2172—2655 kPa
21.7—26.6 bar
315—385 psi

6. Use the following procedure to adjust the transmission control **RATE** to **Med** (medium) before starting calibration:

NOTE: RATE must be set at **Med** *for both forward (FSpd) and reverse (RSpd) for calibration.*

   a. Press **MENU** until **RATE** is displayed.

   b. Press **NEXT** until **FSpd** is displayed. If **Med** is not displayed, press **NEXT** until **Med** is displayed.

Continued on next page

AA95137,00008F1 -19-01JUN11-1/3

PREVIEW - YOUFIXTHIS.COM
Download full manual at youfixthis.com

❷ Short Circuit Check	Turn key switch OFF.	
	Disconnect fuel level sensor (B10). See Transmission Harness (W7) Component Location. (Group 9015-10.)	
	Disconnect SDM connector (X6). See Cab Harness (W5) Component Location. (Group 9015-10.)	
	Turn key switch ON.	**YES:** Short to power between pin A of fuel level sensor and pin N of SDM (H1) connector (X6). Repair or replace harness(es).
	Check for voltage at pin A (wire Y33 YEL) at fuel level sensor (B10) connector. See Transmission Harness (W7) Wiring Diagram. (Group 9015-10.)	**NO:** Go to next step in this check.
	Fuel level sensor (B10) disconnected.	
	SDM connector (X6) disconnected.	
	Key switch on.	
	Check for voltage at pin B (wire R04 BLK) at fuel level sensor (B10) connector. See Cab Harness (W5) Wiring Diagram	**YES:** Short to power between pin B of fuel level sensor and pin B of SDM (H1) connector (X6). Repair or replace harness(es).
	Is system voltage present?	**NO:** Go to Open Circuit Check.

WS68074,0001073 -19-04APR07-4/6

❸ Open Circuit Check	Turn key switch OFF.	
	Disconnect fuel level sensor (B10). See Transmission Harness (W7) Component Location. (Group 9015-10.)	
	Disconnect SDM (H1) connector (X6). See Cab Harness (W5) Component Location. (Group 9015-10.)	
	Check continuity between pin A of fuel level sensor (B10) connector and pin N of SDM (H1) connector (X6). See Transmission Harness (W7) Wiring Diagram and see Cab Harness (W5) Wiring Diagram. (Group 9015-10.)	**YES:** Go to Reprogram Controller.
	Is continuity indicated?	**NO:** Open circuit between pin A of sensor (B10) connector and pin N of connector (X6). Repair or replace harness(es).

WS68074,0001073 -19-04APR07-5/6

❹ Reprogram Controller	Reprogram standard display monitor (SDM) (H1).	
	Check for active codes.	**YES:** Replace controller.
	Is SDM code 000096.03 still present?	**NO:** Checks complete.

WS68074,0001073 -19-04APR07-6/6

000096.04 — Fuel Level Sender Short to Gnd

There is a short to ground present on the fuel level sensor circuit.

Continued on next page

WS68074,0001074 -19-04APR07-1/5

PREVIEW - YOUFIXTHIS.COM

Download full manual at youfixthis.com

TX1144425 —UN—24SEP13

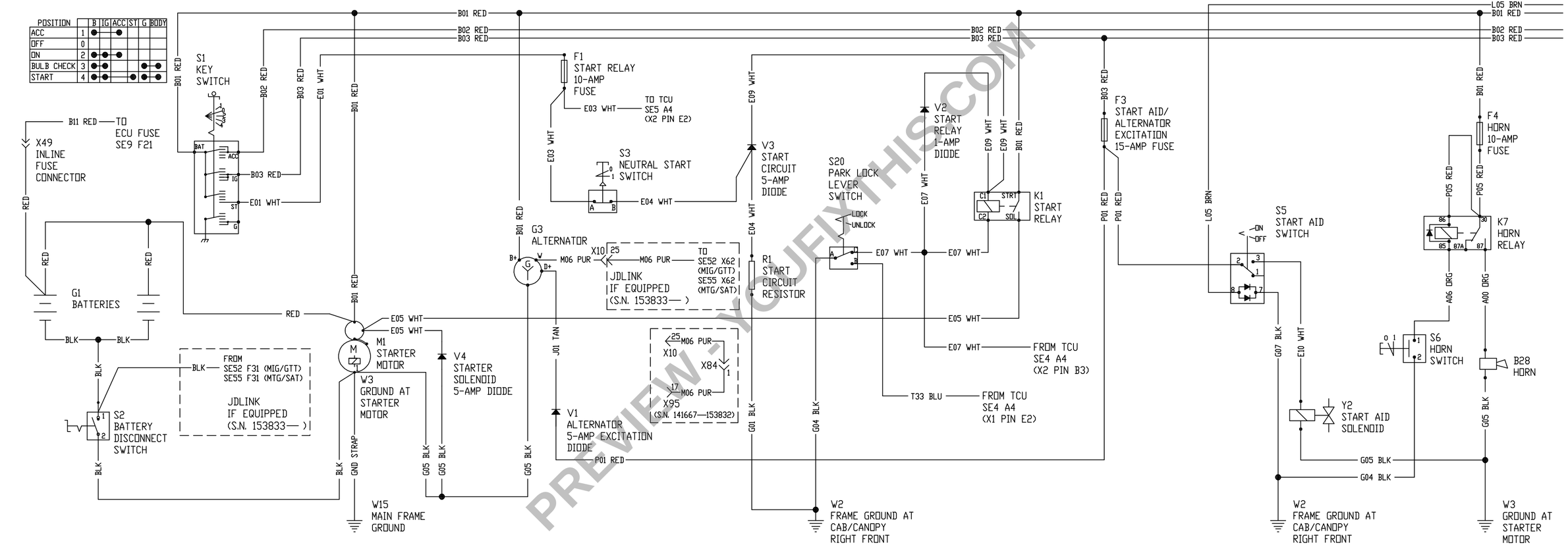

TX1144425

Continued on next page

450J/550J/650J SYSTEM FUNCTIONAL SCHEMATIC (1 OF 7)

System Functional Schematic (SE1, SE2, and SE3) (1 of 7)

CS33148,00022BF -19-24SEP13-2/15

PREVIEW - YOUFIXTHIS.COM

Download full manual at youfixthis.com

TX1074438 —UN—05APR10

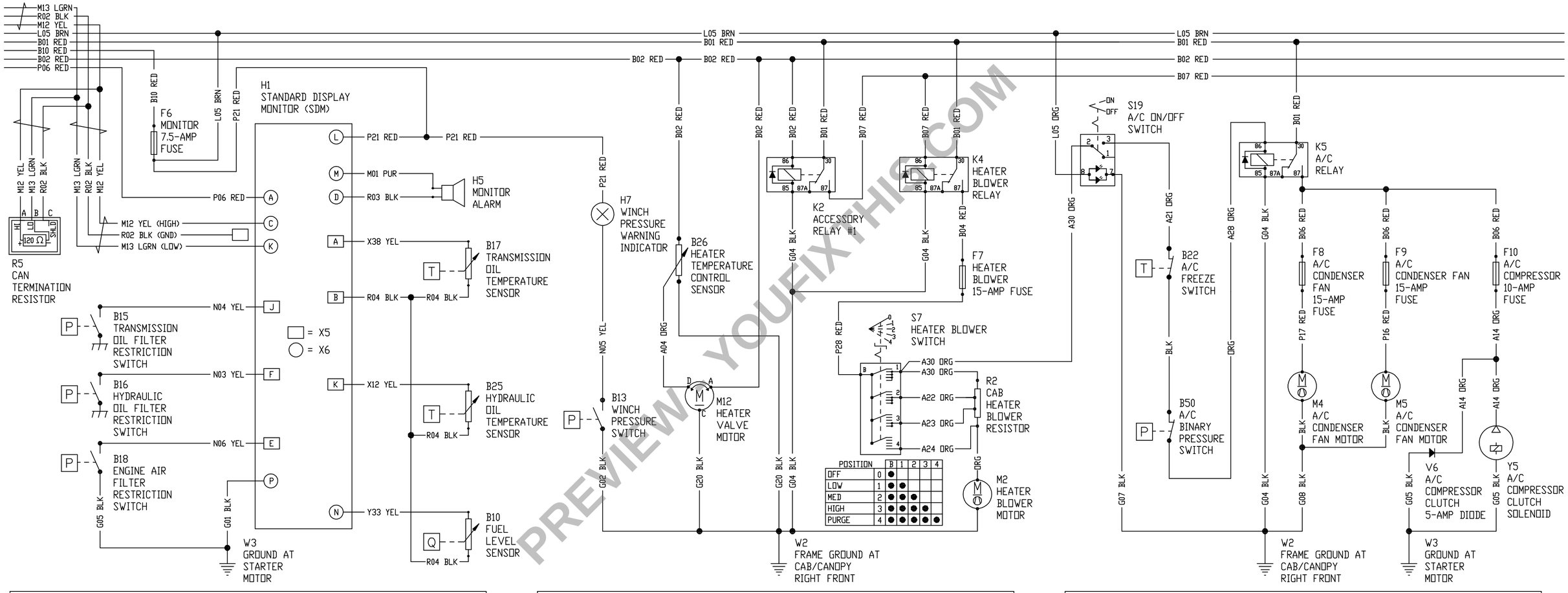

POSITION		B	1	2	3	4
OFF	0	●				
LOW	1	●	●			
MED	2	●	●	●		
HIGH	3	●	●	●	●	
PURGE	4	●	●	●	●	●

TX1074438

450J/550J/650J SYSTEM FUNCTIONAL SCHEMATIC (4 OF 7)

System Functional Schematic (SE10, SE11, and SE12) (4 of 7)

Continued on next page

CS33148,00022BF -19-24SEP13-8/15

PREVIEW - YOUFIXTHIS.COM
Download full manual at youfixthis.com

Hydraulic System Schematic—IGC

TX1050713 —19—04NOV08

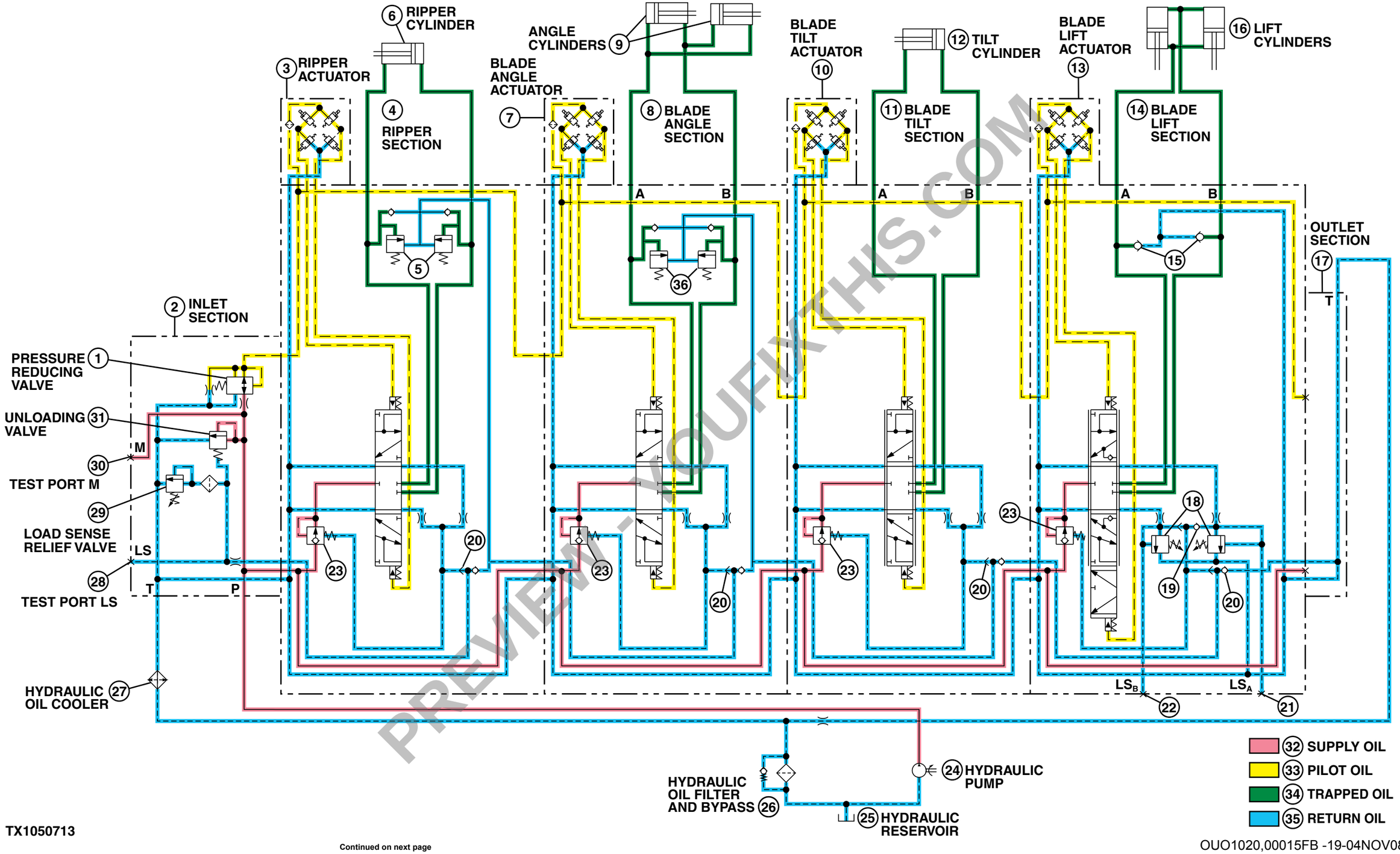

TX1050713

Continued on next page

OUO1020,00015FB -19-04NOV08-1/2

PREVIEW - YOUFIXTHIS.COM

Download full manual at youfixthis.com

c. Press **SELECT**. If **Med** is displayed, repeat step b to activate **RSpd**.

7. Press **NEXT** until **TYPE** is displayed, select **TYPE**.
8. Press **NEXT** until **STD** is displayed, push **SELECT**.

NOTE: The TCL must be in neutral and park lock lever must be in up (locked) position before starting next calibration step.

9. Pull park lock lever up and move TCL to neutral.

   Press **MENU** until **CAL** is displayed.

NOTE: T1 corresponds to Tier 1 engines, T2 corresponds to Tier 2 engines, and T? means transmission TCU must be calibrated for machine to operate properly.

10. Press **SELECT** and hold down for 5 seconds. The TCU window will scroll a machine ID number, T1, T2, or a T?, software version, followed by **PARK** being displayed. The transmission speed will display default speed of (**1.5**) in the monitor display unit (MDU).

NOTE: Each lever or pedal must be moved slowly through its full travel holding at the detent or stop positions until display in TCU window changes, or a calibration code will occur taking you out of calibration, or a diagnostic trouble code will occur during normal operation.

11. Put park lock lever down into the unlocked position. **DecB** will be displayed.
12. Press the decelerator down to the brake stop. **DecH** will be displayed.
13. Release decelerator pedal. **DOWN** will be displayed.
14. Press transmission speed control switch on the TCL **DOWN** until display on TCU window displays **UP**.
15. Press transmission speed control switch on the TCL **UP** until display on TCU window displays **RStr**.
16. Slowly move the TCL to right steer detent. **Do not** go into counter rotate. TCU window will display **LStr**.
17. Slowly move the TCL to left steer detent. **Do not** go into counter rotate. TCU window will display **NStr**. When TCL is released back to neutral detent, TCU window will display **RCtR**.
18. Slowly move the TCL to right counter rotate (stop). TCU window will display **LCtR**.
19. Slowly move the TCL to left counter rotate (stop). TCU window will display **NStr**.
20. Slowly move the TCL back to neutral detent. TCU window will display **For.**.
21. Slowly move TCL into forward, past detent to mechanical stop. **Neut** will be displayed.
22. Slowly move TCL back to neutral. TCU window will display **Rev**.
23. Slowly move TCL into reverse, past detent to mechanical stop. TCU window will display **Neut**.
24. Slowly move TCL back to neutral. TCU window will display **DecL**.
25. Press and hold decelerator pedal to first mechanical stop until **DecH** is displayed.
26. **Very slowly** release decelerator pedal taking approximately 5 seconds. **ThrH** will be displayed.

NOTE: Engine rpm will not change during the next two steps.

27. Move engine speed dial slowly to high idle stop. **ThrL** will be displayed.
28. Move engine speed dial slowly to low idle stop. Display window will scroll **OK**, **PUSH**, and then **NEXT**.
29. Press **NEXT**. If calibration has been successful **ThrH** will be displayed.

NOTE: If a code is displayed that ends in 6,7,8 or 9, or !CAL, calibration procedure has been unsuccessful to this point. Press MENU button to exit calibration and troubleshoot code. Calibration will need to start over at step 9 above.

30. Increase engine speed to fast idle. The MDU will display **1.0**. **For.** will be displayed on TCU.

⚠ CAUTION: Avoid injury from unexpected track movement. Keep area clear of all bystanders.

31. Move TCL into forward detent. After approximately 2 minutes. **Neut** will be displayed.
32. Move TCL back to neutral. **Rev.** will be displayed.
33. Move TCL into reverse detent. After approximately 2 minutes **Neut** will be displayed.
34. Move TCL back to neutral. Display window will scroll **OK**, **PUSH**, and then **NEXT**.
35. Press NEXT button. TCU window will scroll **SAVE** then **ForL**. The MDU will display **1.0**.

NOTE: Press **MENU** *now to exit the calibration procedure with the TCU set at default values. This is advised only when one of the following DTCs are displayed: F3A8, F3E8, F3C8, F3D8 F3A9, F3E9, F3C9, F3D9. If a code is displayed that ends in (6, 7, 8, or 9), calibration procedure will need to be started over.*

Continued on next page

AA95137,00008F1 -19-01JUN11-2/3

PREVIEW - YOUFIXTHIS.COM
Download full manual at youfixthis.com

Fuel Level Sensor Open or Short

Alarm Level:

No Warning Lamp

WS68074,0001074 -19-04APR07-2/5

1 Component Check	Turn key switch off. Disconnect fuel level sensor (B10). See Transmission Harness (W7) Component Location. (Group 9015-10.) Check resistance of sensor across pins. **Specification** Fuel Level Sensor (B10)—Resistance.....168—192 ohms at 100% Fill (full) 129.5—150.5 ohms at 75% Fill 96—114 ohms at 50% Fill 67.5—82.5 ohms at 25% Fill 4—16 ohms at 0% Fill (empty) Is sensor within specifications?	**YES:** Go to Short Circuit Check. **NO:** Replace the fuel level sensor.

WS68074,0001074 -19-04APR07-3/5

2 Short Circuit Check	Turn key switch OFF. Disconnect fuel level sensor (B10). See Transmission Harness (W7) Component Location. (Group 9015-10.) Check for ground at pin A (wire Y33 YEL) on fuel level sensor (B10) connector. See Transmission Harness (W7) Wiring Diagram and see Cab Harness (W5) Wiring Diagram. (Group 9015-10.) Is ground present?	**YES:** Go to Replace Controller. **NO:** Short to ground at pin A sensor (B10) connector and pin N of SDM (H1) connector (X6). Repair or replace harness(es).

WS68074,0001074 -19-04APR07-4/5

3 Replace Controller	Reprogram Standard Display Monitor (SDM) (H1). Check for active codes. Is SDM code 000096.04 active?	**YES:** Replace controller. **NO:** Checks complete.

WS68074,0001074 -19-04APR07-5/5

000107.03 — Eng Air Filter Short to Power

There is a short to power present on the air filter restriction switch.

WS68074,0001075 -19-04APR07-1/5

Engine Air Filter Restriction Switch Short to Power Diagnostic Procedure

Alarm Level:

No Warning Lamp

Continued on next page

WS68074,0001075 -19-04APR07-2/5

PREVIEW - YOUFIXTHIS.COM

Download full manual at youfixthis.com

TX1144426 —UN—24SEP13

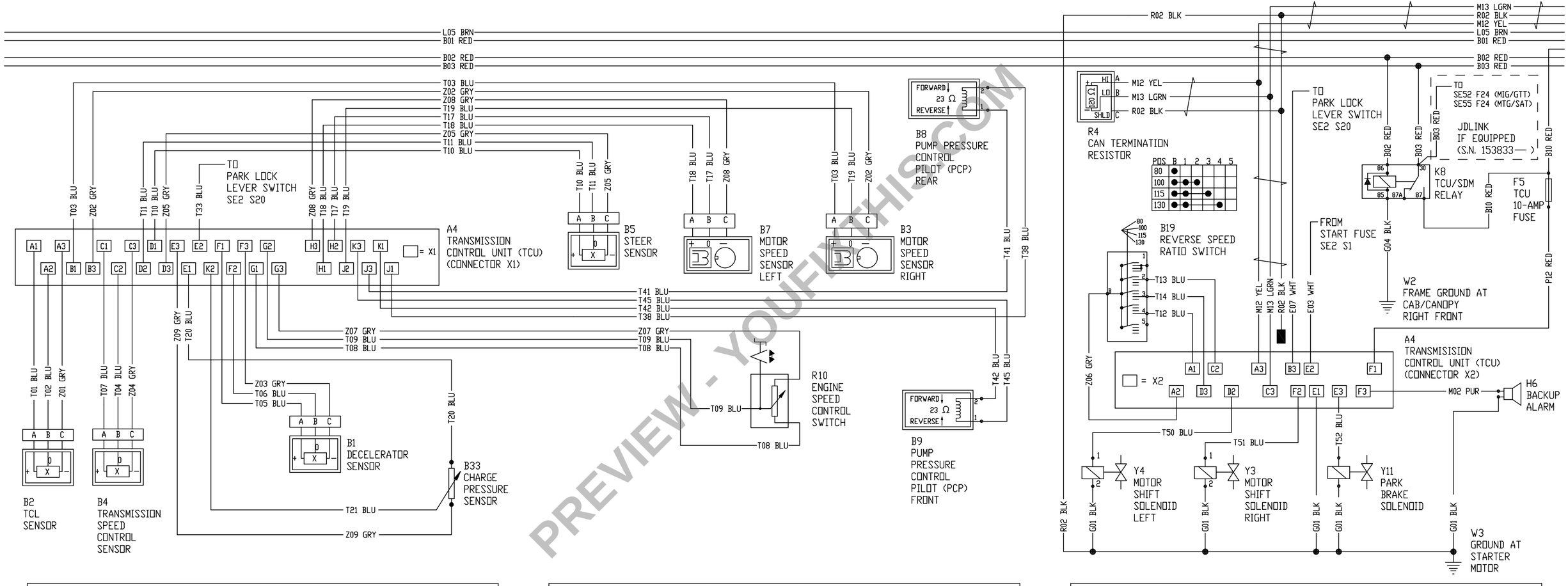

SE4 TRANSMISSION CONTROL UNIT (TCU) (CONNECTOR X1) CIRCUIT

SE5 TRANSMISSION CONTROL UNIT (TCU) (CONNECTOR X1) CIRCUIT

SE6 TRANSMISSION CONTROL UNIT (TCU) (CONNECTOR X2) CIRCUIT

TX1144426

450J/550J/650J SYSTEM FUNCTIONAL SCHEMATIC (2 OF 7)

System Functional Schematic (SE4, SE5, and SE6) (2 of 7)

Continued on next page

CS33148,00022BF -19-24SEP13-4/15

PREVIEW - YOUFIXTHIS.COM

Download full manual at youfixthis.com

TX1074341 —UN—24JUN10

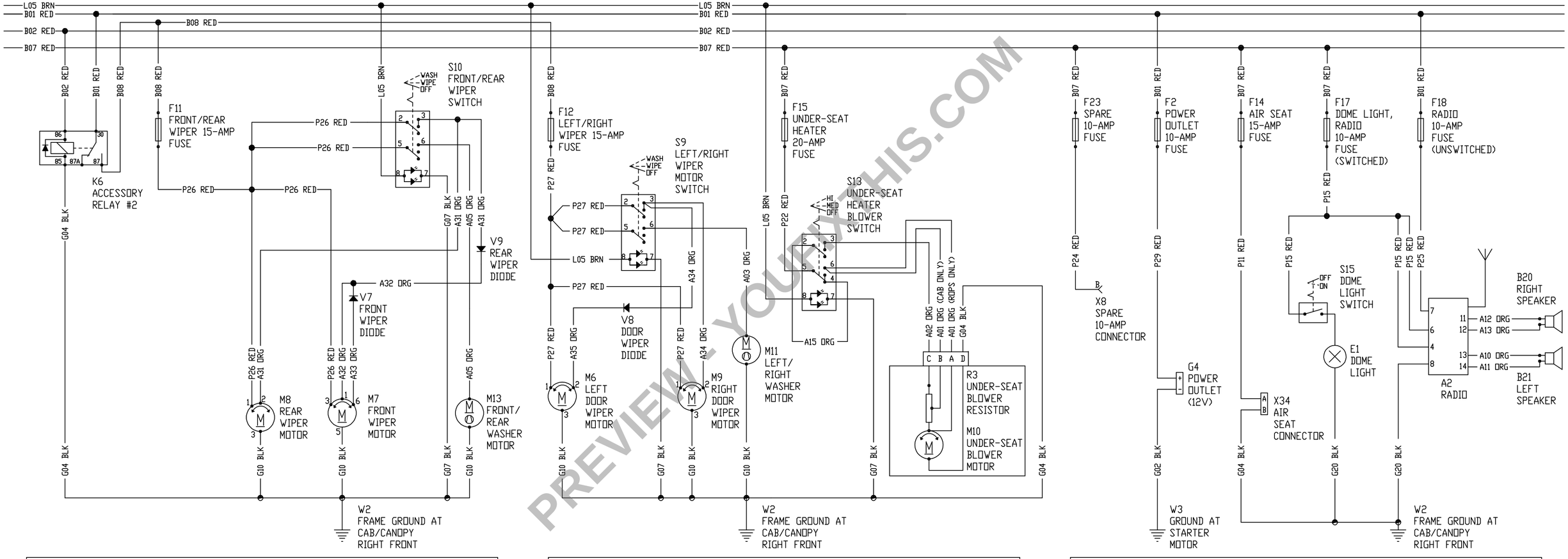

SE13 FRONT AND REAR WIPER CIRCUIT

SE14 LEFT AND RIGHT WIPER CIRCUIT

SE15 POWER OUTLET, AIR SEAT, DOME LIGHT, AND RADIO CIRCUITS

TX1074341

Continued on next page

450J/550J/650J SYSTEM FUNCTIONAL SCHEMATIC (5 OF 7)

System Functional Schematic (SE13, SE14, and SE15) (5 of 7)

CS33148,00022BF -19-24SEP13-10/15

PREVIEW - YOUFIXTHIS.COM

Download full manual at youfixthis.com

Hydrostatic System Diagram—Park Brake On (Neutral)

T197554 —UN—16JUN04

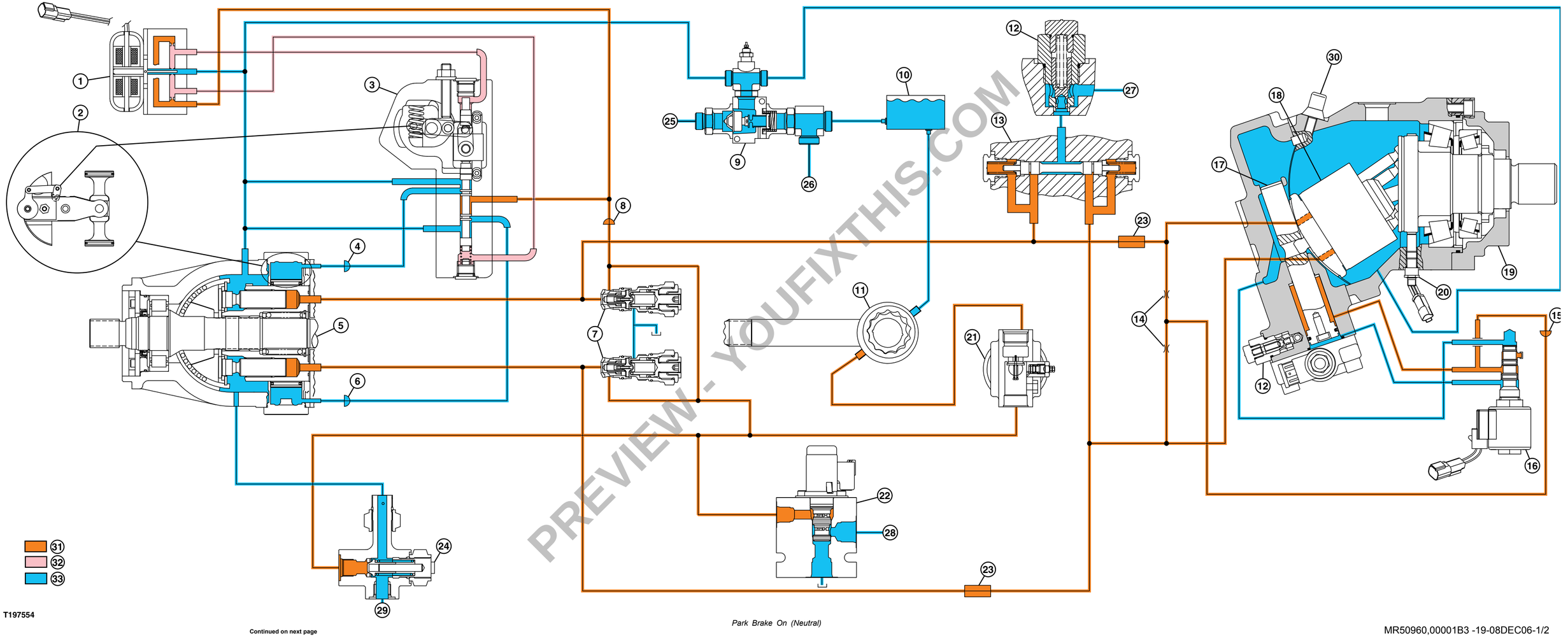

T197554

Continued on next page

Park Brake On (Neutral)

MR50960,00001B3 -19-08DEC06-1/2

PREVIEW - YOUFIXTHIS.COM

Download full manual at youfixthis.com

NOTE: Remaining portion of calibration will be done while driving the machine on level ground with enough room to accelerate to full speed for approximately 46—61 m (150—200 ft.). Machine can be moved to open area without failing calibration. It may take a longer driving distance in either forward or reverse to reach maximum ground speed.

Decelerator pedal can be used to reduce speed when shifting. With decelerator depressed, the TCU window will display **DecH** *until decelerator is released.*

CAUTION: Avoid injury from track movement. Keep area clear of all bystanders.

36. Depress decelerator pedal to stop and move TCL into forward. **UP** will be displayed.
37. Increase forward speed until display on the MDU stops increasing (approximately 2.0).

CAUTION: Avoid injury from track movement. Keep area clear of all bystanders.

38. Release decelerator pedal. When low speed is calibrated, approximately 46—61 m (150—200 ft). **Neut** will be displayed.

    Compare motor speed to target specification.

Specification	
Low Speed Cal Target Motor—Speed	2100 rpm

39. Move TCL into neutral. **RevL** will be displayed with decelerator pedal released.
40. Move TCL into reverse. The DTC light will stop flashing when low speed is calibrated, approximately 46—61 m (150—200 ft). **Neut** will be displayed.
41. Move TCL back to neutral. Display window will scroll **OK**, **PUSH**, and then **NEXT**.
42. Press the NEXT button. Display window will flash **CAL** then display **ForH**. Increase forward speed until display stops increasing (approximately 3.0). If transmission speed is set for 6 mph, increase the forward speed to **3.5**.

CAUTION: Avoid injury from track movement. Keep area clear of all bystanders.

43. Depress decelerator pedal to stop and move TCL into forward.
44. Release decelerator pedal. When high speed is calibrated in, approximately 46—61 m (150—200 ft). **Neut** will be displayed. Move TCL into neutral, **RevH** will be displayed with decelerator pedal released.
45. Move TCL into reverse. When high speed is calibrated in, approximately 46—61 m (150—200 ft). **Neut** will be displayed.
46. Move TCL back to neutral. Display window will scroll **OK**, **PUSH**, and then **NEXT**.

NOTE: **RUN** *will display in TCU window if park lock lever is not in up position (locked) indicating park lock lever is out of park.* **Neut** *will display in TCU window if TCL is out of neutral.*

47. Push **NEXT**.

NOTE: If machine does not reach maximum desired speed, check **RATE** *setting on TCU.* **FSpd** *setting could possibly be set at 3.25 mph. (***Low***).*

48. Place the park lock lever in up position (locked).
49. Decrease engine speed to slow idle.
50. Press **NEXT**. The display window will display **PARK** indicating that calibration mode has been exited.

    After calibration is successfully completed, reset **RATE** to original settings. Go to Step 6 earlier in this section for proper procedure. (Group 9026-25.)

AA95137,00008F1 -19-01JUN11-3/3

PREVIEW - YOUFIXTHIS.COM

Download full manual at youfixthis.com

Contents

Section 9000—General Information
Group 01—Safety

Section 9001—Diagnostic Trouble Codes
Group 10—Standard Display Monitor (SDM) Diagnostic Trouble Codes
Group 20—Engine Control Unit (ECU) Diagnostic Trouble Codes
Group 30—Transmission Control Unit (TCU) Diagnostic Trouble Codes
Group 40—Electrohydraulic Controller (EHC) Diagnostic Trouble Codes
Group 50—Blade Control Joystick (BCJ) Diagnostic Trouble Codes

Section 9005—Operational Checkout Procedure
Group 10—System Operational Checks

Section 9010—Engine
Group 05—Theory Of Operation
Group 15—System Diagnostic Information
Group 25—Tests

Section 9015—Electrical System
Group 05—System Information
Group 10—System Diagrams
Group 15—Sub-System Diagnostics
Group 20—References

Section 9025—Hydraulic System
Group 05—Theory of Operation
Group 15—Diagnostic Information
Group 20—Adjustments
Group 25—Tests

Section 9026—Hydrostatic System
Group 05—Theory of Operation
Group 15—Diagnostic Information
Group 25—Test

Section 9031—Heating and Air Conditioning
Group 05—Theory of Operation
Group 15—Diagnostic Information
Group 25—Test

PREVIEW - YOUFIXTHIS.COM

Original Instructions. All information, illustrations and specifications in this manual are based on the latest information available at the time of publication. The right is reserved to make changes at any time without notice.

COPYRIGHT © 2019
DEERE & COMPANY
Moline, Illinois
All rights reserved.
A John Deere ILLUSTRUCTION ™ Manual
Previous Editions
Copyright © 2007, 2008, 2009, 2010, 2011, 2012, 2013, 2014, 2015, 2018

Download full manual at youfixthis.com

Recognize Safety Information

This is the safety alert symbol. When you see this symbol on your machine or in this manual, be alert for the potential of personal injury.

Follow the precautions and safe operating practices highlighted by this symbol.

A signal word — DANGER, WARNING, or CAUTION — is used with the safety alert symbol. DANGER identifies the most serious hazards.

On your machine, DANGER signs are red in color, WARNING signs are orange, and CAUTION signs are yellow. DANGER and WARNING signs are located near specific hazards. General precautions are on CAUTION labels.



T133555 —UN—15APR13

T133588 —19—28AUG00

TX03679,00016CC -19-08JAN18-1/1

Follow Safety Instructions

Read the safety messages in this manual and on the machine. Follow these warnings and instructions carefully. Review them frequently. Keep safety signs in good condition. Replace missing or damaged safety signs. Be sure new equipment components and repair parts include the current safety signs. Replacement safety signs are available from your John Deere dealer.

Be sure all operators of this machine understand every safety message. Replace operator's manual and safety labels immediately if missing or damaged.



T133556 —UN—24AUG00

TX03679,00016F9 -19-14JAN08-1/1

Operate Only If Qualified

Do not operate this machine unless the operator's manual has been read carefully, and you have been qualified by supervised training and instruction.

Operator should be familiar with the job site and surroundings before operating. Try all controls and machine functions with the machine in an open area before starting to work.

Know and observe all safety rules that may apply to every work situation and work site.

TX03679,00016FA -19-03JAN07-1/1

PREVIEW - YOUFIXTHIS.COM

Download full manual at youfixthis.com

Section 9000
General Information

Contents

Page

Group 01—Safety

Recognize Safety Information 9000-01-1
Follow Safety Instructions..... 9000-01-1
Operate Only If Qualified 9000-01-1
Wear Protective Equipment..... 9000-01-2
Avoid Unauthorized Machine Modifications..... 9000-01-2
Inspect Machine 9000-01-2
Stay Clear of Moving Parts..... 9000-01-2
Avoid High-Pressure Fluids 9000-01-3
Avoid High-Pressure Oil 9000-01-3
Beware of Exhaust Fumes 9000-01-4
Prevent Fires 9000-01-4
Prevent Battery Explosions 9000-01-4
Handle Chemical Products Safely..... 9000-01-5
Dispose of Waste Properly 9000-01-5
Prepare for Emergencies..... 9000-01-5
Add Cab Guarding For Special Uses 9000-01-6
Start Only From Operator's Seat 9000-01-6
Prevent Unintended Machine Movement..... 9000-01-6
Avoid Work Site Hazards..... 9000-01-7
Keep Riders Off Machine 9000-01-7
Avoid Backover Accidents 9000-01-8
Avoid Machine Tip Over 9000-01-8
Prevent Unintended Detonation of Explosive Devices 9000-01-9
Park And Prepare For Service Safely..... 9000-01-9
Service Cooling System Safely 9000-01-9
Remove Paint Before Welding or Heating 9000-01-10
Make Welding Repairs Safely 9000-01-10
Drive Metal Pins Safely 9000-01-10

PREVIEW - YOUFIXTHIS.COM

Download full manual at youfixthis.com

Left Reverse Pump Coil Open Diagnostic Procedure

Alarm Level:

Check Service Code

RH60123,00007A0 -19-28AUG15-2/4

1 Component Check	Turn key switch OFF. Disconnect pump pressure control pilot (PCP) Rear (B8). See Engine Harness (W6) Component Location. (Group 9015-10.) Check resistance across pin 1 and 2 on pump pressure control pilot (PCP) rear. **Specification** Pump Pressure Control Pilot (PCP) Rear (B8)—Resistance.....19.3—25.3 ohm Is the resistance within specifications?	**YES:** Go to Open Circuit Check. **NO:** Replace PCP sensor. Calibrate transmission control unit (TCU). See Transmission Control Unit (TCU) Calibration. (Group 9015-20.)

RH60123,00007A0 -19-28AUG15-3/4

2 Open Circuit Check	Turn key switch OFF. Disconnect pump pressure control pilot (PCP) Rear (B8). See Engine Harness (W6) Component Location. (Group 9015-10.) Disconnect TCU connector (X1). See Cab Harness (W5) Component Location. (Group 9015-10.) Check wire T41 BLU for continuity between pin 1 on pump pressure control pilot (PCP) rear (B8) connector and pin J3 on TCU connector (X1). See Engine Harness (W6) Wiring Diagram and see Cab Harness (W5) Wiring Diagram. (Group 9015-10.) Is continuity indicated?	**YES:** Checks complete. **NO:** Open circuit on wire T41 BLU between pin 1 on pump pressure control pilot (PCP) rear (B8) connector and pin J3 on connector (X1). Repair or replace harness if necessary.

RH60123,00007A0 -19-28AUG15-4/4

F3E6 — Left Rev Pump Thresh Cal Low

The rear pump pressure control pilot (PCP) is limited to the forward direction and the reverse threshold (point of track movement) is too low.

RH60123,00007A1 -19-19APR19-1/5

Left Reverse Pump Threshold Calibration Value Too Low Diagnostic Procedure

Alarm Level:

Check Service Code

Continued on next page

RH60123,00007A1 -19-19APR19-2/5

PREVIEW - YOUFIXTHIS.COM
Download full manual at youfixthis.com

Blade Control Joystick (BCJ) Diagnostic Trouble Codes (DTC)

The diagnostic trouble code number is indicated by a suspect parameter number (SPN) and a failure mode indicator (FMI) number. In the example**002697.03** 2697 is the SPN and 03 is the FMI number.

To view diagnostic trouble codes, use one of the following methods:

- Service ADVISOR™ system. See Reading Diagnostic Trouble Codes with service ADVISOR™ Diagnostic Application. (Group 9015-20.)
- Standard Display Monitor (SDM). See Standard Display Monitor (SDM) Menu Structure—Service Mode. (Group 9015-20.)

NOTE: For in-depth diagnostics on all BCJ diagnostic trouble codes, see specific code diagnostic procedure. (Group 9001-50.)

service ADVISOR is a trademark of Deere & Company

WS68074,0000A9C -19-05APR07-1/1

002697.03 — X-Axis Sensor Out of Range High

The x-axis effect sensor is out of range high.

AA95137,00008C8 -19-04APR07-1/3

Joystick Diagnostic Procedure

Alarm Level:

Check Service Code

AA95137,00008C8 -19-04APR07-2/3

1 **Code Check**	Check for active codes. Is BCJ code 002697.03 still present?	**YES:** Joystick malfunction. Replace joystick. See Integrated Grade Control (IGC) Cab Harness (W22) Component Location—If Equipped. (Group 9015-10.) **NO:** Checks complete.

AA95137,00008C8 -19-04APR07-3/3

002697.04 — X-Axis Sensor Out of Range Low

The x-axis effect sensor is out of range low.

AA95137,00008C9 -19-04APR07-1/3

Joystick Diagnostic Procedure

Alarm Level:

Check Service Code

AA95137,00008C9 -19-04APR07-2/3

1 **Code Check**	Check for active codes. Is BCJ code 002697.04 still present?	**YES:** Joystick malfunction. Replace joystick. See Integrated Grade Control (IGC) Cab Harness (W22) Component Location—If Equipped. (Group 9015-10.) **NO:** Check complete.

AA95137,00008C9 -19-04APR07-3/3

PREVIEW - YOUFIXTHIS.COM

Download full manual at youfixthis.com

A8—IGC Load Center (IGC option)
A9—Blade Control Joystick (BCJ) (IGC option)
A11— Electrohydraulic Controller (EHC) (IGC option)
F101— IGC 15-Amp Fuse (Switched Power)
F102— BCJ 5-Amp Fuse
F103— Electrohydraulic Controller 10-Amp Fuse
F104— IGC 10-Amp Fuse (Unswitched Power)
F105— IGC 10-Amp Fuse (Unswitched Power)
F106— IGC 10-Amp Fuse (Unswitched Power)
K101— IGC Switched Power Relay
K102— BCJ and Electrohydraulic Controller Switched Power Relay
R6—IGC CAN Termination Resistor
R7—IGC CAN Termination Resistor
S30— Hydraulic Enable Switch (IGC option)
W3—Ground at Starter Motor
W20—IGC Ground
X10— Cab/Canopy Harness-to-Engine Harness Connector
X81— RS232 3-Pin Connector (IGC option)
X82— Electrohydraulic Controller (EHC) Connector (IGC option)
X83— Electrohydraulic Controller (EHC) Connector (IGC option)
X84— IGC Cab Harness-to-Cab/Canopy Harness 4-Pin Connector
X85— Auxiliary Joystick Connector (IGC option)
X86— Machine CAN Connector (IGC option)
X87— IGC Power 1-Pin Connector
X90— IGC Auxiliary Actuator 4-Pin Connector (IGC option)
X95— IGC Machine Harness-to-IGC Cab Harness 35-Pin Connector
X96— IGC Interface 23-Pin Connector (IGC option)
X97— BCJ Switch Module Connector (IGC option)
X98— BCJ Four-Way Axis Module Connector (IGC option)
Y30— Blade Angle Actuator (IGC option)
Y31— Blade Tilt Actuator (IGC option)
Y32— Blade Lift Actuator (IGC option)

CS33148,00022BF -19-24SEP13-15/15

JDLink™ System Functional Schematic—MIG/GTT

Machine may be equipped with one of two different JDLink™ systems. See JDLink™ System Identification. (Group 9015-20.)

Continued on next page

DP27668,000073E -19-18SEP13-1/4

PREVIEW - YOUFIXTHIS.COM

Download full manual at youfixthis.com

B22— A/C Freeze Switch
B50— A/C High/Low Pressure (Binary) Switch
M2—Heater Blower Motor
M4—Condenser Fan Motor
M5—Condenser Fan Motor
R2—Cab Heater Blower Resistor
W14—Condenser Harness
X12— Cab/Canopy-to-A/C Harness Connector
X51— A/C Harness-to-Condenser Harness Connector

WS68074,000094C -19-24MAR10-2/2

PREVIEW - YOUFIXTHIS.COM

Download full manual at youfixthis.com

❹ **CAN Low Wire Voltage Check**	Using a multimeter, measure voltage from pin D (CAN low) to pin A (ground) of Service ADVISOR™ connector (3). Is voltage between 1.50—2.50 volts?	**YES:** Perform CAN High Wire Circuit Check. (Group 9015-10.) **NO:** System voltage is measured. A short-to-power exists on the CAN low wire. Check CAN low voltage one controller at a time to locate the short circuit. Repair or replace harness as necessary. See Canopy Harness (W4) Wiring Diagram or Cab Harness (W5) Wiring Diagram and see Engine Harness (W6) Wiring Diagram. (Group 9015-10.) **NO:** Zero volts are measured. Perform CAN Low Wire Circuit Check. (Group 9015-10.) **NO:** Voltage is out of range but greater than 0 and less than system voltage. Remove one controller at a time and recheck voltage. When voltage is in range, check harness of disconnected controller for short circuits. Repair or replace harness as necessary. See Canopy Harness (W4) Wiring Diagram or Cab Harness (W5) Wiring Diagram and see Engine Harness (W6) Wiring Diagram. (Group 9015-10.)

Service ADVISOR is a trademark of Deere & Company

Continued on next page

CS33148,00021F3 -19-28MAR17-6/9

PREVIEW - YOUFIXTHIS.COM

Download full manual at youfixthis.com

Hydraulic Component Location

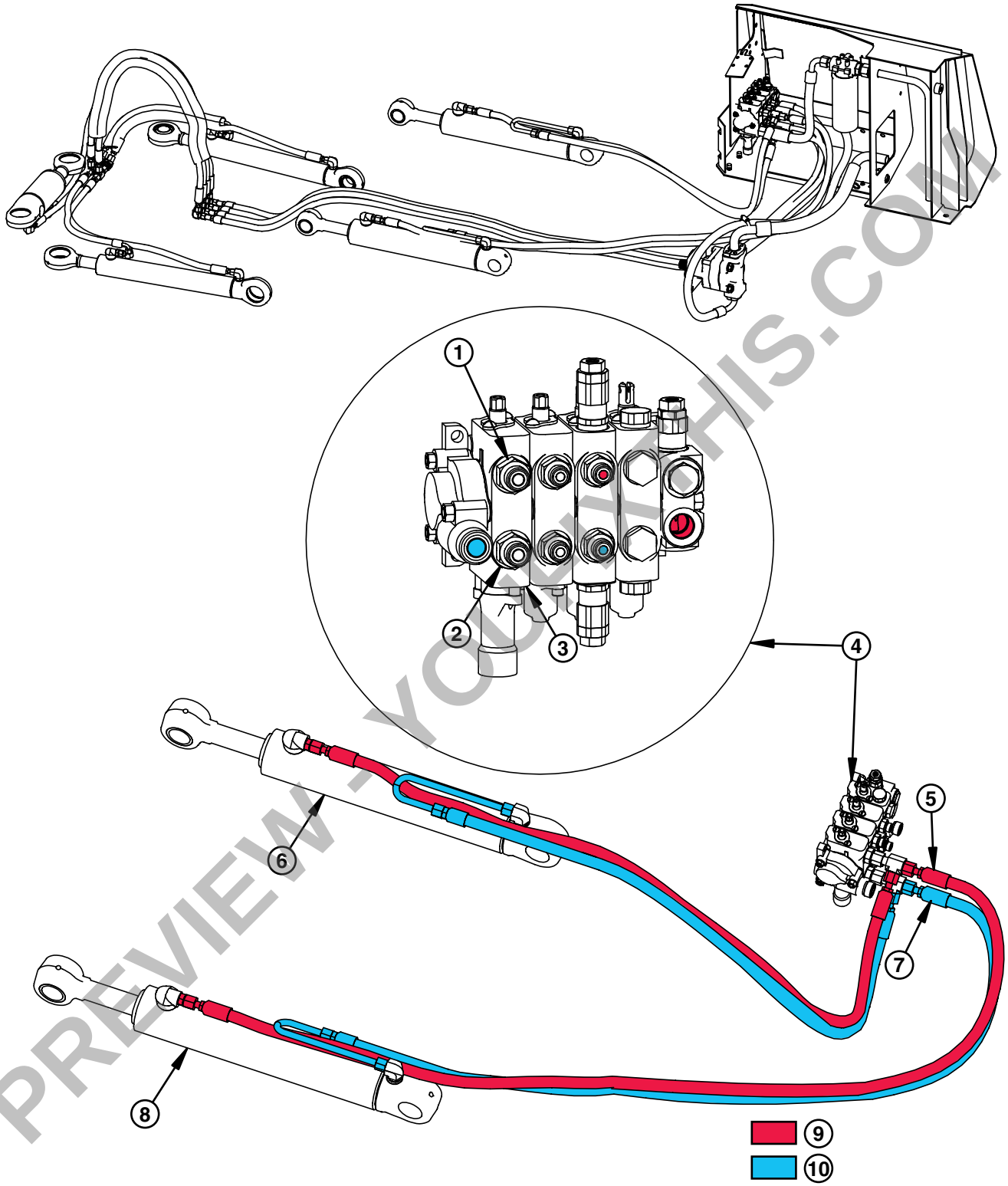

T197448 —UN—26JAN04

Blade Lift Cylinder Circuit—Blade Lift Operation

Continued on next page

BR81691,0000055 -19-14JAN04-1/5

PREVIEW - YOUFIXTHIS.COM
Download full manual at youfixthis.com

Hydrostatic System Diagram—Reverse (Fast Speed)

T197556 —UN—07NOV05

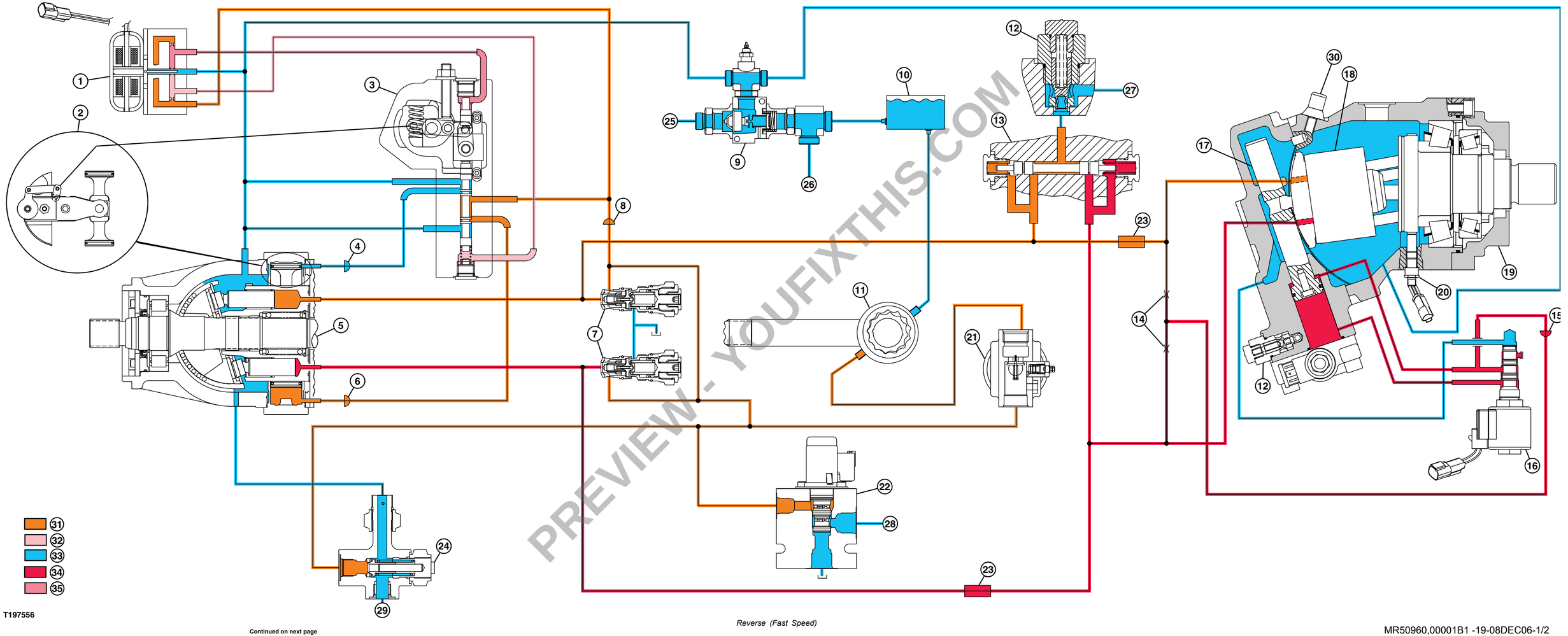

T197556

Continued on next page

Reverse (Fast Speed)

MR50960,00001B1 -19-08DEC06-1/2

PREVIEW - YOUFIXTHIS.COM

Download full manual at youfixthis.com

PREVIEW ONLY

You're viewing 25 of 714 pages

The full manual includes:

- All 714 pages, complete
- Searchable PDF (find any keyword)
- No watermarks
- Instant download
- Print-ready quality

GET FULL MANUAL NOW

John Deere 450J, 550J, 650J Technical Manual

Scan or click anywhere
youfixthis.com

Click anywhere on this page to get the full manual