PREVIEW - YOUFIXTHIS.COM

Download full manual at youfixthis.com

PREVIEW - YOUFIXTHIS.COM

Download full manual at youfixthis.com

Air Intake System - Summary of References

- Air cleaner - exploded view
- Replacing the sending unit for air cleaner restriction (B02)

LX25458,0000390 -19-04JUL06-1/1

General Information

IMPORTANT: Never run the engine without the primary filter element, secondary (safety) filter element and the dust unloading valve all in place.

NOTE: For instructions on how to repair the turbocharger, see relevant Component Technical Manual for "Engines".

LX25458,0000391 -19-04JUL06-1/1

Air Cleaner - Exploded View

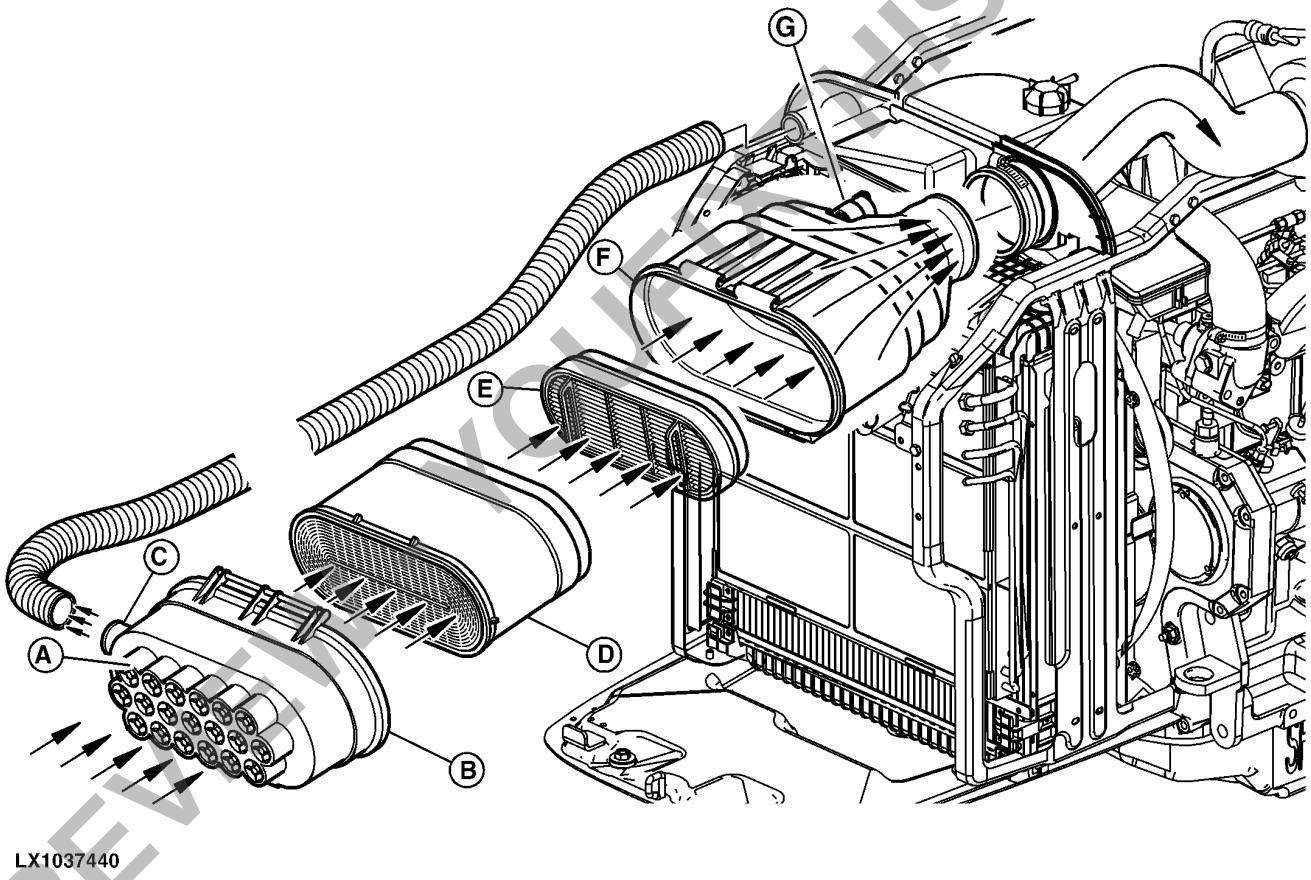

A—Air intake openings
B—Air cleaner housing
C—Outlet
D—Primary filter element
E—Secondary (safety) element
F—Outlet tube
G—Sending unit for air cleaner restriction

LX25458,0000392 -19-04JUL06-1/1

PREVIEW YOUFIXTHIS.COM

Download full manual at youfixthis.com

Install wire seal

Slip the correct size seal onto the wire.

IMPORTANT: The seal must fit snugly against the wire insulation, without a gap between the seal and the insulation. Furthermore, the outer lips of the seal must fit snugly against the wall of the terminal body.

Strip insulation from wire to expose 4 mm (0,16 in.) length of wire. Move the seal all the way to the edge of the insulation.

Replace female terminal

Place female terminals in the matching recess in crimping pliers KLM10019-1.

NOTE: Special pliers KLM10019-1 are included in harness repair tool kit FKM10461.

Place the stripped portion of the wire and wire seal in the recess in the female terminal, and squeeze the pliers until they engage.

NOTE: The wire seal is crimped to the female terminal together with the wire in one single process.

To open the pliers, pull the release lever.

Before installing a female terminal, bend the locking tang back to its original position.

From the back, insert the female terminal into the terminal body.



LX1015909 —UN—24OCT96



LX012371 —UN—27NOV95

Slide on the cover and install the cable binder.

LX25599,000017D -19-26NOV08-3/11

30-pin plug

Extract female terminal

Use a pointed tool (A) to press in the locking tang.

Press the female terminal forward and out of the terminal body.

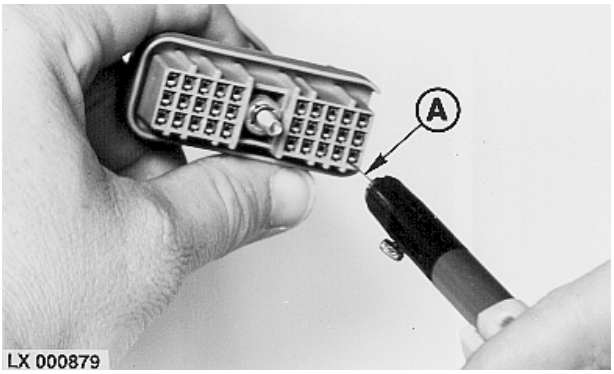

LX000879 —UN—26APR95

Continued on next page

LX25599,000017D -19-26NOV08-4/11

PREVIEW - YOUFIXTHIS.COM

Download full manual at youfixthis.com

Replacing PLC/UIC Control Unit

NOTE: See reference "Instructions when Replacing a Control Unit", before replacing the control unit with another one.

Remove screws (A) and put aside control unit (B).

Remove nuts and sheet (C).

Release and pull off the connector (see arrow).

Remove control unit (D).

A new PLC/UIC control unit has to be programmed and calibrated.

See Instructions when Replacing a VIN Control Unit.

See PLC - Calibration and Input Addresses, Section 245 and UIC - Calibration and Input Addresses, Section 245.

A—Screws
B—Control unit
C—Sheet
D—Control unit

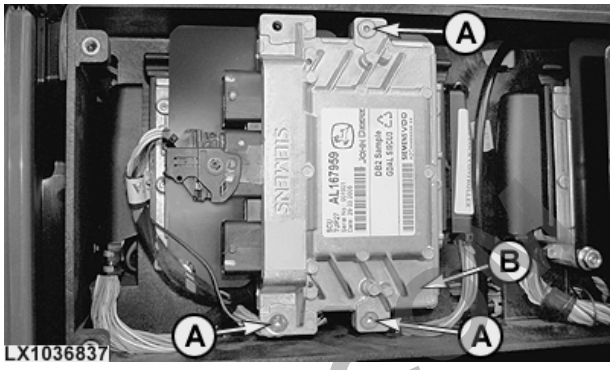

LX1036837 —UN—19SEP05

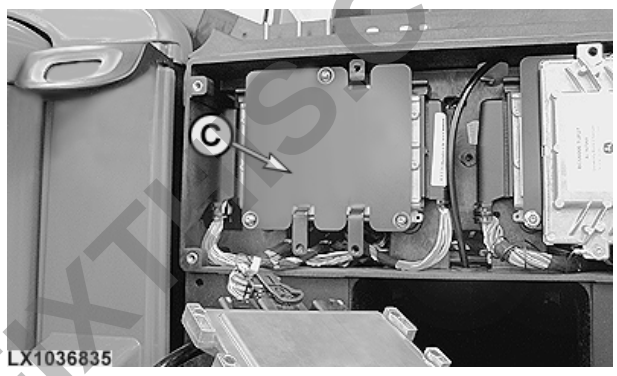

LX1036835 —UN—14JUL05

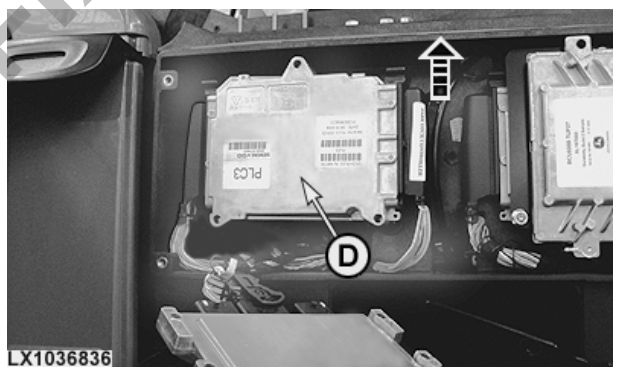

LX1036836 —UN—15JUL05

LX25458,00000D6 -19-09JAN07-1/1

PREVIEW - YOUFIXTHIS.COM

Download full manual at youfixthis.com

CAUTION: When performing the work described below, comply with the safety instructions in the relevant Technical Manuals.

CAUTION: Components that are coated with locking paint must NOT be opened, adjusted or repaired. These components may only be replaced as complete assemblies.

IMPORTANT: DISCONNECT ELECTRICAL CIRCUIT
Before working on the electrical system, always disconnect battery ground cable (-).

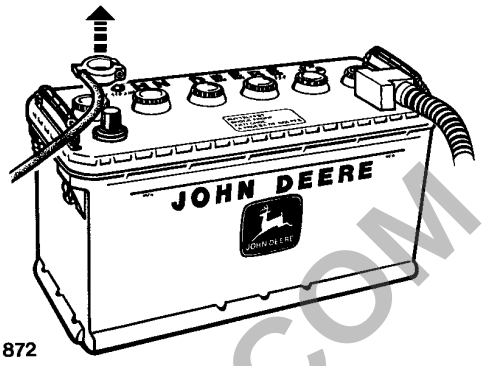

LX000872 —UN—19SEP94

LX25601,00007F5 -19-22MAY06-2/13

Removing the trim panel

1. Remove the cover and recondition the clutch actuation mechanism.



LX1037346 —UN—15DEC05

LX25601,00007F5 -19-22MAY06-3/13

2. If necessary, detach and lift the trim.



LX1037347 —UN—15DEC05

Continued on next page

LX25601,00007F5 -19-22MAY06-4/13

PREVIEW - YOUFIXTHIS.COM

Download full manual at youfixthis.com

Replace Transmission Output Speed Sensor (B63)

1. Pull out the harness plug.
2. Remove the sensor.
3. Before installation, apply oil to the O-ring (see arrow) and install the sensor.
4. Tighten the hex. socket screw to the specified torque value.

Specification

B63 - Transmission output speed sensor—Torque.....10 N·m
7 lb-ft

IMPORTANT: After tightening the cheese-head screw, secure it with thread lock paint (L116666). This simultaneously serves as confirmation that the sensor has been correctly installed.

5. Connect harness plug to sensor.

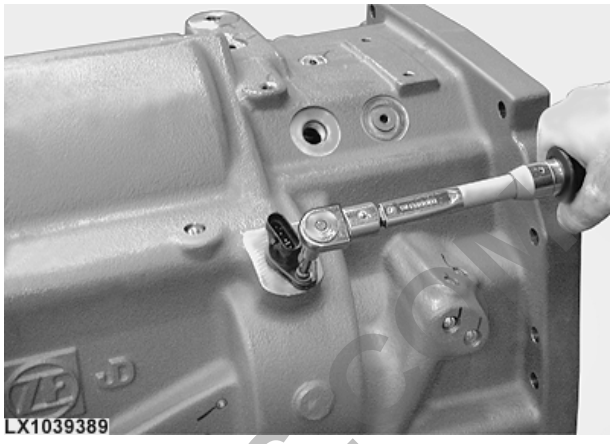

LX1039389 —UN—04JUL06

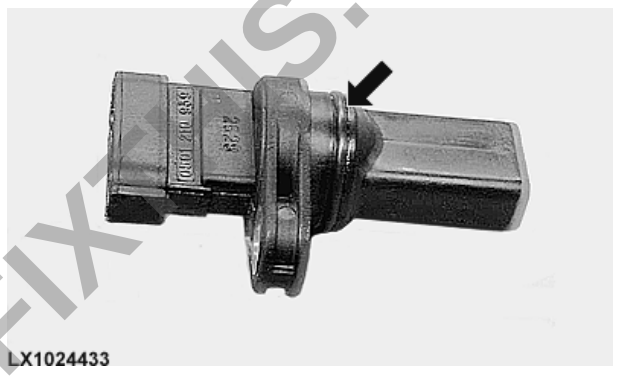

LX1024433 —UN—07AUG01

LX25601,0000847 -19-07AUG06-1/1

Replace Wheel Speed Sensor B84

1. Coat O-ring (A) with oil and install it on the sensor.

A—O-ring



LX1028187 —UN—14FEB02

Continued on next page

LX25601,000082F -19-16JAN08-1/2

PREVIEW - YOUFIXTHIS.COM

Download full manual at youfixthis.com

7. Remove screws (E) and pull suction line (B) out of the differential housing.

IMPORTANT: Trap oil as it emerges. Seal the open ends so that no dust can penetrate.

Remove covers (A) and (F).

Mark connectors (C), (D), (G) and (H) and all other connectors of the transmission wiring harness to facilitate re-assembly, then disconnect them. Then remove the wiring harness from the PowrQuad transmission and move it to the rear.

A—Cover
B—Suction line
C—Connector
D—Connector
E—Screw
F—Cover
G—Connector
H—Connector

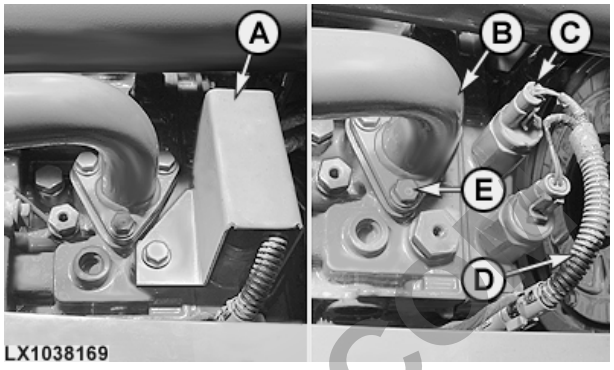

LX1038169 —UN—12APR06

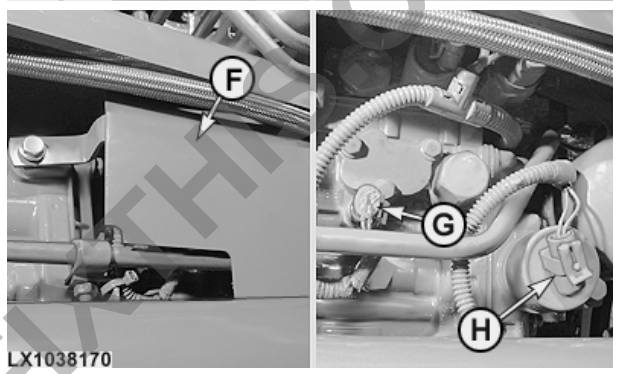

LX1038170 —UN—12APR06

OULXA64,0001A3D -19-23OCT08-2/3

8. As shown, install lifting device JDG1655A on the PowrQuad transmission and attach to a hoist.

Remove all flange screws (D), then move the PowrQuad transmission towards the front and lift it out.

D—Flange screw

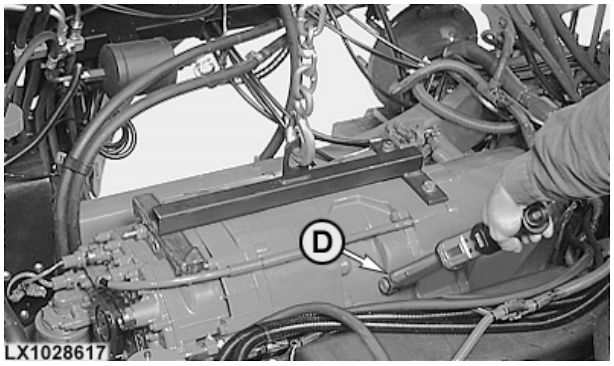

LX1028617 —UN—05NOV07

OULXA64,0001A3D -19-23OCT08-3/3

PREVIEW - YOUFIXTHIS.COM

Download full manual at youfixthis.com

Reconditioning the valves

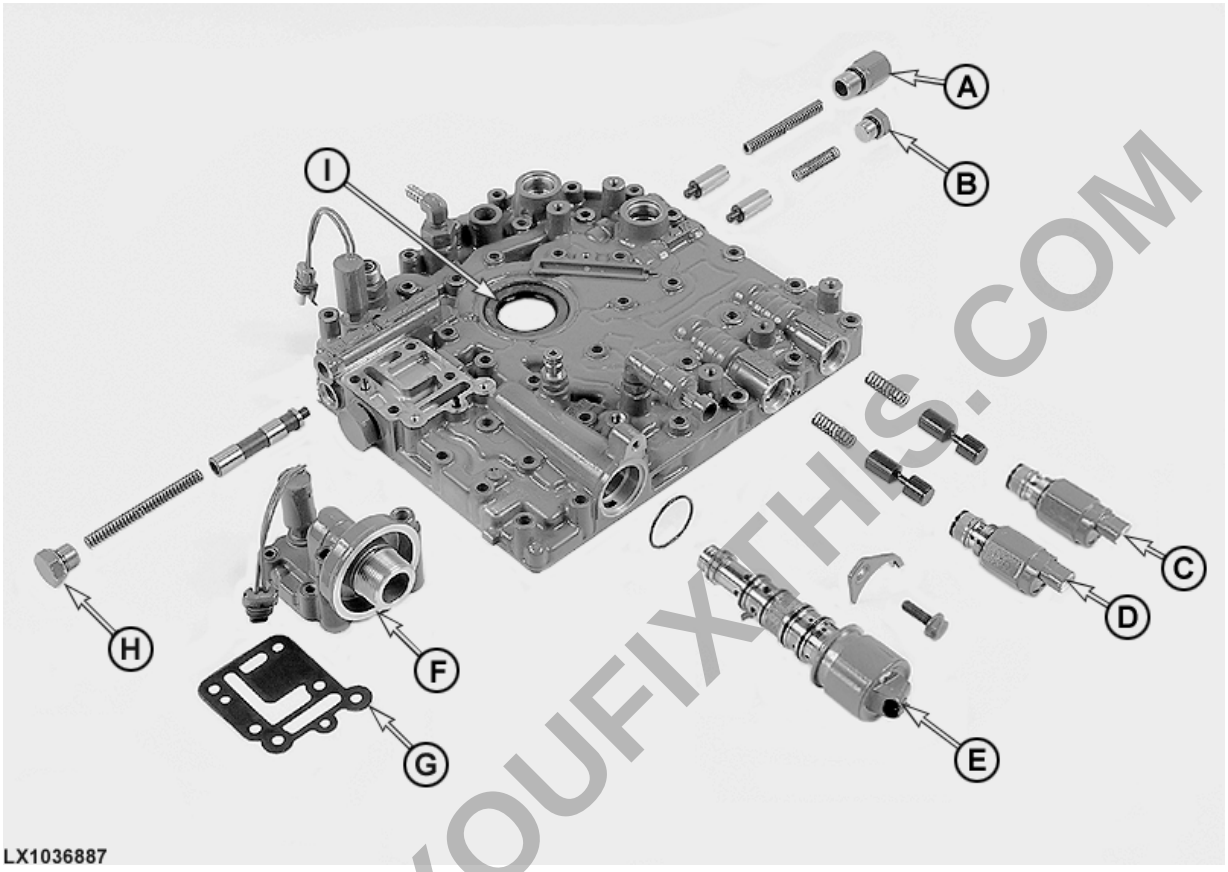

LX1036887 —UN—15JUL05

A—Cooler relief valve
B—Lube oil relief valve
C—Solenoid valve and shift valve (reverse)
D—Solenoid valve and shift valve (forward)
E—Enable proportional solenoid valve
F—Oil filter housing
G—Gasket
H—Transmission oil filter by-pass valve
I— Sealing ring

1. Remove and recondition the valves as required.
2. Inspect valve parts for wear. Replace, if necessary.

NOTE: Before installing a valve, check that the bore into which it is installed is clean.

3. Tighten the plugs of the various valves as specified below.

Specification	
Transmission oil filter by-pass valve, plug—Torque	20 N·m 15 lb-ft
Cooler relief valve, plug—Torque	30 N·m 22 lb-ft
Lube oil relief valve, plug—Torque	20 N·m 15 lb-ft
Reverse solenoid valve—Torque	45 N·m 33 lb-ft
Forward solenoid valve—Torque	45 N·m 33 lb-ft
Enable proportional solenoid valve, screw—Torque	25 N·m 18 lb-ft

4. If necessary, replace seal ring (I) with a new one. Use oil seal installer JDG775.

LX25601,0000788 -19-27OCT05-2/2

PREVIEW - YOUFIXTHIS.COM

Download full manual at youfixthis.com

2. Apply some LOCTITE® 574 sealant to hole (A); apply it all the way round the inside of the hole.

A— Hole for screw

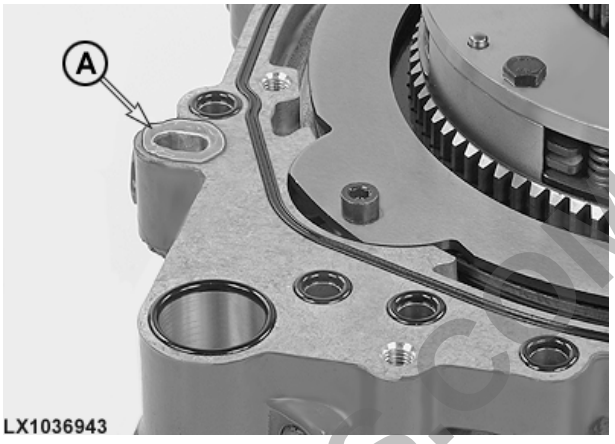

LX1036943 —UN—27JUL05

LOCTITE is a registered trademark of the Loctite Corporation

LX25601,000079A -19-15SEP05-2/3

3. Put on the B2-B3 brake housing.

Next step:

See ”Install the B1 Brake Housing”.

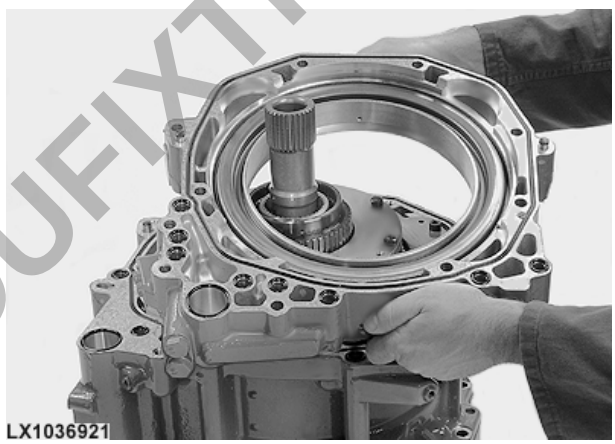

LX1036921 —UN—26JUL05

LX25601,000079A -19-15SEP05-3/3

Remove the C4 Clutch

Preliminary work:

See ”Remove the B2-B3 Brake Housing”.

1. Remove the C4 clutch.

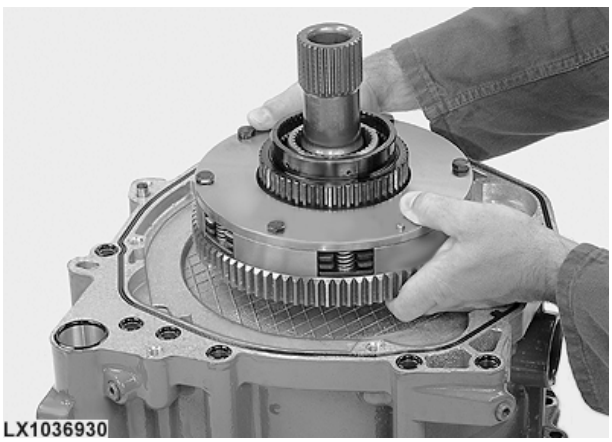

LX1036930 —UN—26JUL05

Continued on next page

LX25601,000079B -19-15SEP05-1/4

PREVIEW - YOUFIXTHIS.COM

Download full manual at youfixthis.com

PREVIEW - YOUFIXTHIS.COM

Download full manual at youfixthis.com

Page

Disassemble and Asssemble Axle Housing 56-25-8
Disassemble and Assemble Axle Shaft 56-25-10
Install Axle Housing 56-25-10
Install Planetary Carrier and Check Rolling Drag Torque 56-25-11

Group 30—Rear PTO
Drive Systems - Rear PTO, Summary of References 56-30-1
Rear PTO - Special Tools 56-30-1
Rear PTO - Specifications 56-30-2
Replace the Output Shaft Seal Ring 56-30-2
Replace the O-Ring on Reversible PTO 56-30-3
PTO Clutch - Cross-Sectional View 56-30-6
PTO Clutch - Exploded View 56-30-7
Remove the PTO Clutch 56-30-7
Recondition the PTO Clutch 56-30-9
Recondition the PTO Brake 56-30-18
Install the PTO Clutch 56-30-18
PTO Drive Train - Sectional View 56-30-21
PTO Drive Train - Exploded View 56-30-23
Remove the PTO Drive Train 56-30-25
Recondition the Output Shaft 56-30-28
Recondition the PTO Shifter 56-30-34
Recondition the Countershaft 56-30-41
Recondition the PTO Shaft Spline Identifier (Which End Out) 56-30-43
Install the PTO Drive Train 56-30-45
Remove PTO Drive Train (Reversible) 56-30-45
Recondition the Output Shaft (Reversible) 56-30-46
Recondition the Countershaft (Reversible) 56-30-50
Install PTO Drive Train (Reversible) 56-30-52
Adjust Taper Roller Bearing of Countershaft 56-30-53
Adjust the Tapered Roller Bearing of the Bearing Support 56-30-54
Recondition Y81 - Proportional Solenoid Valve for Rear PTO 56-30-56
Replace B06 - Rear PTO Speed Sensor 56-30-57
Recondition the Oil Sight-Glass 56-30-57

PREVIEW - YOUFIXTHIS.COM

Download full manual at youfixthis.com

Front-Wheel Drive Clutch - Exploded View

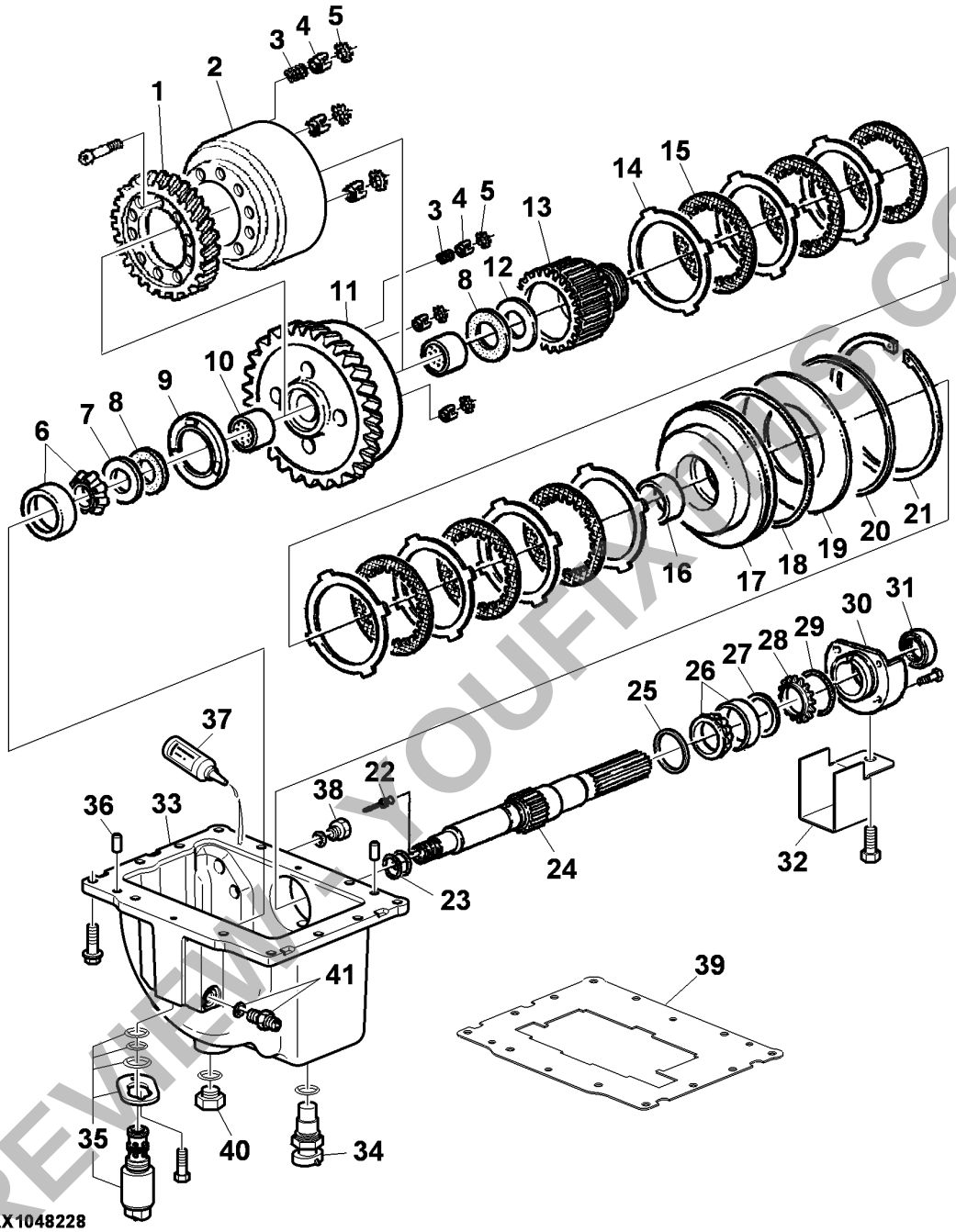

LX1048228 —UN—14JUL09

Continued on next page

LX23006,00004B9 -19-27MAY09-1/2

PREVIEW ONLY YOUFIXTHIS.COM
Download full manual at youfixthis.com

NOTE: Snap rings are available in various sizes (see Parts Catalog).

9. Install the bearing cones tight against the pump drive gear shim pack and install the thickest snap ring (A) possible. Install two snap rings, if necessary.

Specification

Pump Drive Gear (Snap Ring and Bearing Cone)—End play	0.11 mm 0.004 in.

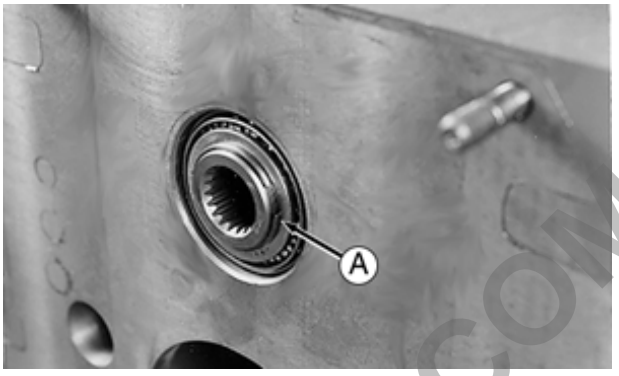

RW21438 —UN—02JUL92

10. Install the pump drive pinion. See “Assemble and Install Pump Drive Pinion” in this group.
11. Install differential assembly. See “Installing the Differential” in Group 15 of this Section.

LX23006,0000493 -19-05JUL06-5/5

Assemble and Install Pump Drive Pinion

IMPORTANT: Each cup and cone of the bearing assembly is a matched set and must be assembled together.

1. Install the bearing snap ring (F) and bearing cups (D) and (H) into the sleeve bore.
2. Install the lower bearing cone (I) with the larger OD against the gear. To do so, use the bearing installer from the JDG781 bearing installer tool set.
3. Install the bearing spacer ring (E) on the shaft.
4. Install the sleeve assembly on the drive shaft.
5. Install the upper bearing (C) on the shaft, with the larger bearing OD against the driver. To do so, use the bearing installer from JDG781 bearing installer tool set.

NOTE: Snap rings are available in various sizes (see Parts Catalog).

6. Install the bearing cones against the gear shoulder and install the thickest snap ring (B) possible. Install two snap rings, if necessary.

Specification

Pump Drive Pinion (Snap Ring and Bearing Cone)—End play	0.11 mm 0.004 in.

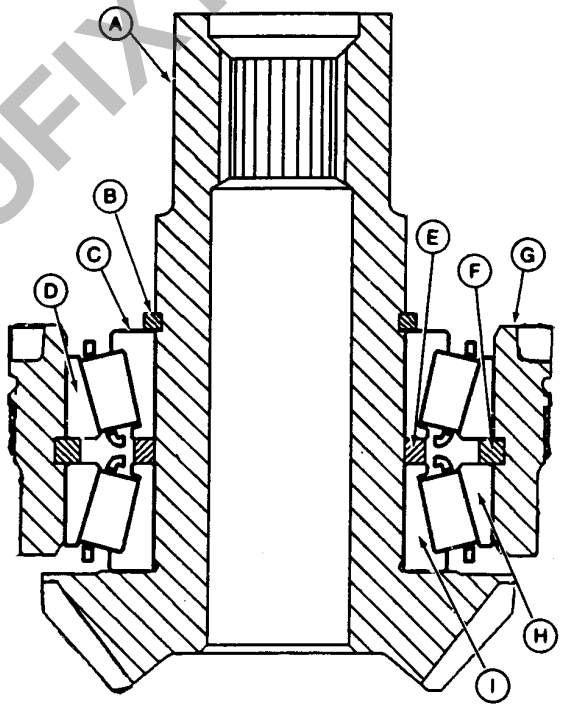

RW21444 —UN—02JUL92

A—Pump drive pinion
B—Snap ring
C—Upper bearing cone
D—Bearing cup
E—Bearing spacer ring (inner)
F—Bearing snap ring (outer)
G—Sleeve
H—Bearing cup
I— Lower bearing cone

Continued on next page

LX23006,0000494 -19-05JUL06-1/3

PREVIEW - YOUFIXTHIS.COM

Download full manual at youfixthis.com

2. Remove the PTO stub shaft.

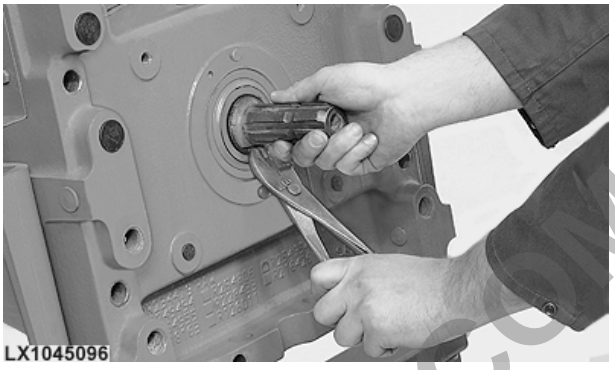

LX1045096 —UN—25APR08

MT18821,0000221 -19-26FEB09-2/7

3. Remove screws (A) of bearing support (B) and screws (C) used for attaching the wiring harness.
4. Remove bearing support (B).

A—Screws
B—Bearing support
C—Screws

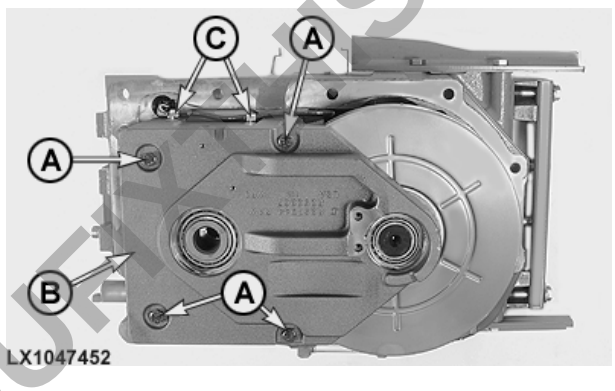

LX1047452 —UN—10DEC08

MT18821,0000221 -19-26FEB09-3/7

5. Pull bearing (A) off gear with cover (C) and remove it together with washer (B).

A—Bearing
B—Washer
C—Gear with cover

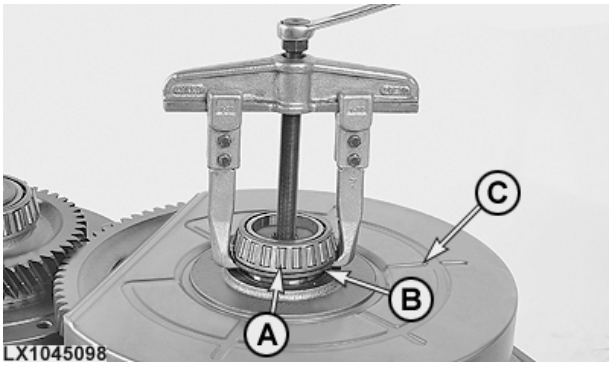

LX1045098 —UN—25APR08

Continued on next page

MT18821,0000221 -19-26FEB09-4/7

PREVIEW - YOUFIXTHIS.COM

Download full manual at youfixthis.com

Exploded View of Steering Column

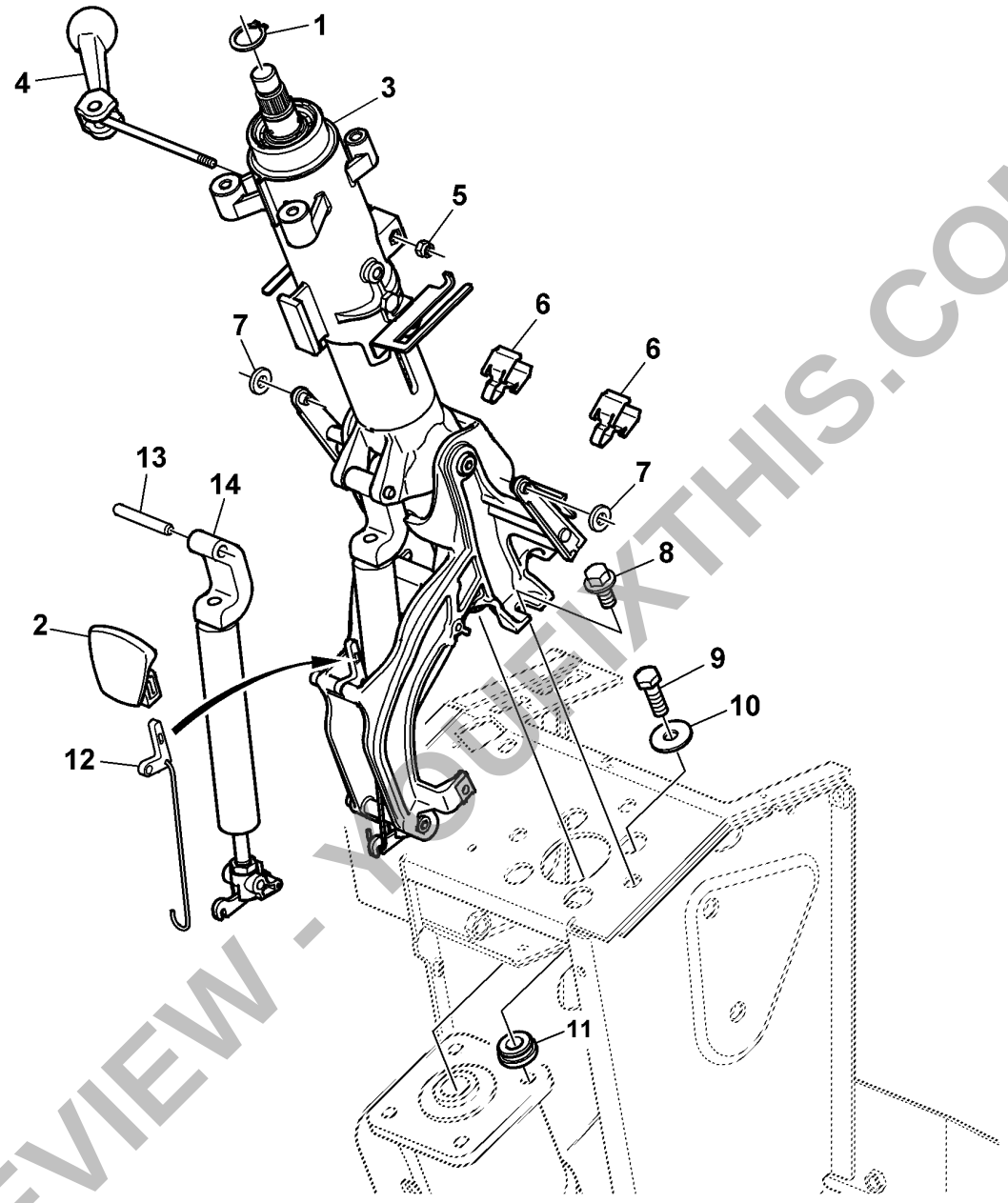

Steering column

1— Snap ring	5— Nut	9— Screw (4 used)	13— Pin
2— Grip	6— Clip (2 used)	10— Washer (4 used)	14— Gas-filled strut
3— Steering column	7— Washer	11— Collar	
4— Lever	8— Flanged screw (3 used)	12— Linkage	

Continued on next page

LX25458,0000746 -19-16JAN08-1/2

PREVIEW - YOUFIXTHIS.COM

Download full manual at youfixthis.com

2. Bowden cable for M-SCV at pos. 1-3.
   a. Loosen lock nut on yoke (A).
   b. Remove retaining pin (B).
   c. Move the control lever to neutral.
   d. Turn yoke (A) until the bore is aligned with the bore in the control lever, and make sure that it is screwed in far enough, i.e. at least 6 mm (0.236 in.).
   e. Install the retaining pin.
   f. Tighten the locknut on the yoke.
   g. Check the adjustment.

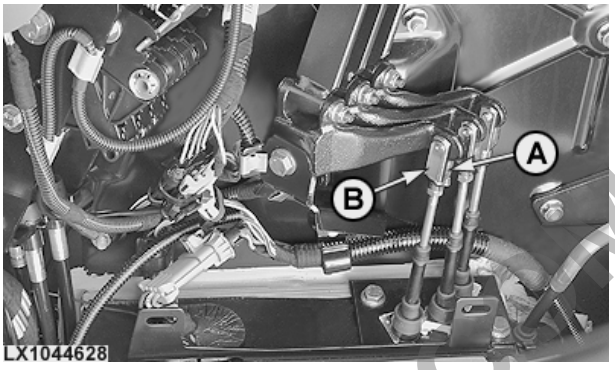

LX1044628 —UN—25APR08

A—Yoke **B—Retaining pin**

LX24603,000065C -19-29AUG08-3/5

3. Bowden cable for M-SCV at pos. 4.
   a. Adjust the control lever with adjusting nuts (A) so that it fits in cut-out (B).
   b. Counterlock adjusting nuts (A).
   c. Install the shift gate without the side panel.
   d. Check the adjustment.
   e. Remove the shift gate again.

A—Adjusting nut **B—Cut-out**

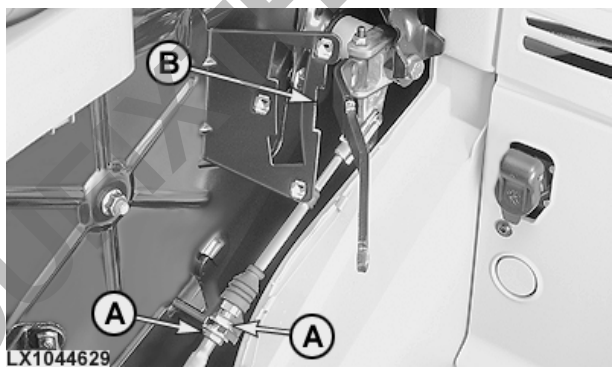

LX1044629 —UN—25APR08

LX24603,000065C -19-29AUG08-4/5

4. Install the side panel underneath the shift console.
   a. Carefully press the panel in and use screws (B) to install cover (C).
   b. Install plastic nuts (A).
   c. Install the grip on the lever.

A—Plastic nuts **C—Cover**
B—Screws

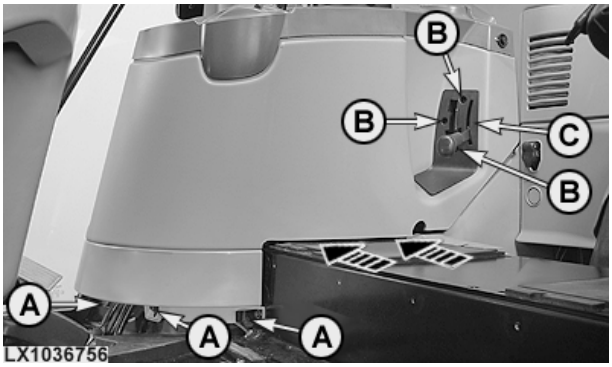

LX1036756 —UN—28JUL05

LX24603,000065C -19-29AUG08-5/5

PREVIEW - YOUFIXTHIS.COM

Download full manual at youfixthis.com

Recondition the Control Block (Without Priority 2)

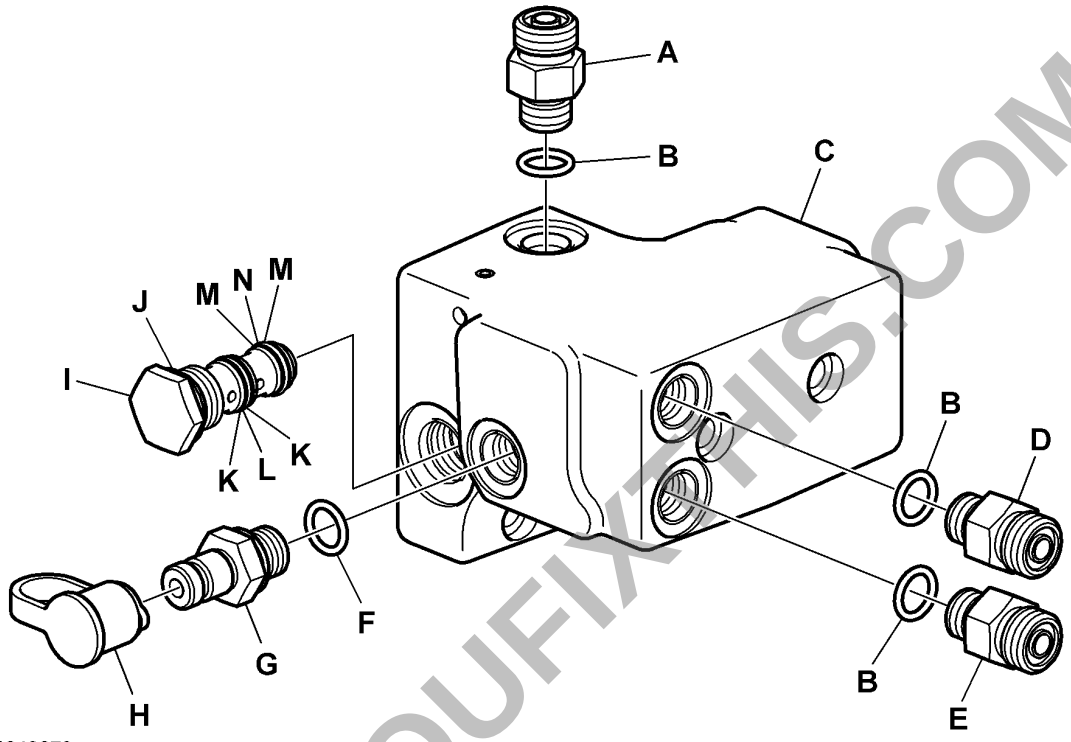

LX1043279

LX1043279 —UN—17JUL07

A—Connection piece (LS pressure from priority 1 control block)
B—O-ring
C—Housing
D—Connection piece with check valve (LS pressure from brake valve)
E—Connection piece (oil pressure to brake valve)
F—O-ring
G—Test port for system pressure
H—Protective cap
I— Shuttle valve (LS pressure, steering valve - brake valve)
J— O-ring
K—Back-up ring
L—O-ring
M—Back-up ring
N—O-ring

CAUTION: Comply with repair instructions, see Hydraulic System - General Instructions on Safety and Repair in this Group.

IMPORTANT: The valves must only be loosened or tightened by hand using a torque wrench, never use power tools (e.g. pneumatic impact wrench).

NOTE: Remove and install control block; see Remove and Install the Control Block With or Without Priority 2 in this Group.

1. Remove the various parts, clean and inspect them for wear or damage and replace as necessary.
2. Install shuttle valve (I).

Specification	
Shuttle valve—Torque	35 - 40 N·m 26 - 29 lb-ft

LX24603,00006C8 -19-07JUL09-1/1

PREVIEW - YOUFIXTHIS.COM

Download full manual at youfixthis.com

Recondition the Selective Control Valves (M-SCVs 300)

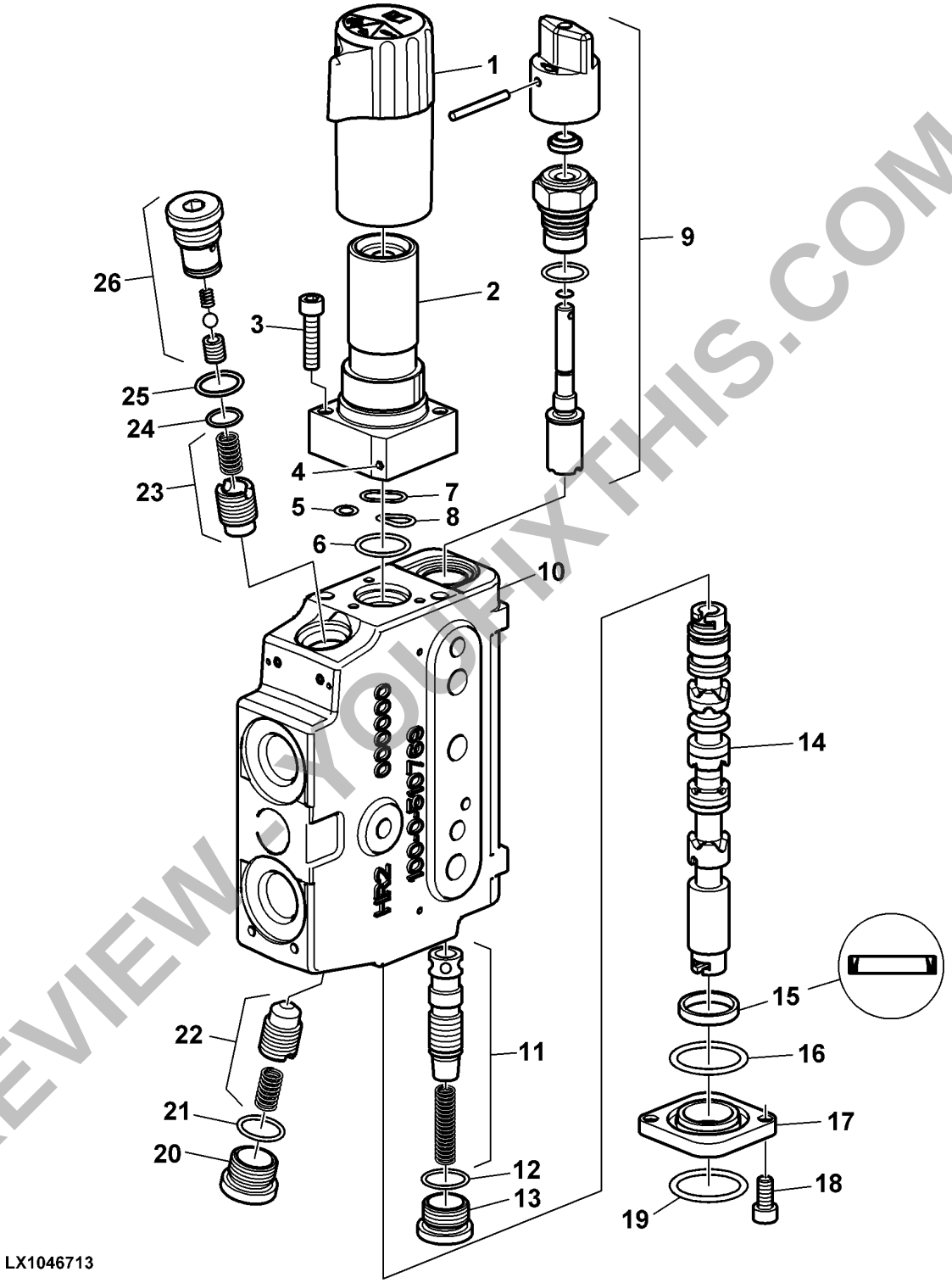

LX1046713 —UN—14OCT08

Continued on next page

LX24603,00004D0 -19-25AUG08-1/2

PREVIEW - YOUFIXTHIS.COM
Download full manual at youfixthis.com

Miscellaneous - Removal and Installation of Components, Summary of References

Remove and Install the Main Frame (Summary of References)

Preliminary Work for Removal of the Main Frame

Remove the Main Frame

Install the Main Frame

Remove and Install the Front-Wheel Drive Axle (Summary of References)

Remove the Front-Wheel Drive Axle

Install the Front-Wheel Drive Axle

Remove the Front-Wheel Drive Axle with TLS

Install the Front-Wheel Drive Axle with TLS

Remove and Install the Front Axle Support (Summary of References)

Remove the Front Axle Support

Install the Front Axle Support

OULXA64,000195D -19-08NOV07-1/1

Special Tools

Special tools (dealer-fabricated), Section 99, Group 05

DFLX5 - Lifting eye for cab

DFLX13 - Holding device

DFLX14 - Holding device for front-wheel drive axles with TLS

DFLX15 - Holding device for tractor components

Special tools (available as spare part), Section 99, Group 10

D05007ST - Tractor splitting stand

JDG23 - Lifting sling

-JT02043 - Support stand

JT02044 - Support stand

JT05724 - Medium-duty front tractor splitting stand

JT05725 - Universal support stand

JT07211 - Support stand

KJD10527 - Tool for extracting spring pins from Panhard links (TLS front-wheel drive axle).

KJD10539 - Adapter for support stand JT07211

OULXA64,000198C -19-29JAN09-1/1

PREVIEW - YOUFIXTHIS.COM

Download full manual at youfixthis.com

Item	Measurement	Specification
Cast wheel disk to rim, hex. nut	Torque	310 N·m 230 lb-ft
Rear rim (steel) to adjustable hub, cap screw	Torque	400 N·m 300 lb-ft
Key sleeve hub-half to wheel hub, cap screw	Torque	400 N·m 300 lb-ft
Jack screws, adjustable hub	Torque	30 N·m (22 lb-ft)

LX23006,0000516 -19-23JAN08-2/2

Remove the Front and Rear Wheels

CAUTION: Before taking off the front and rear wheels, take note of the following safety instructions.

Remove a wheel on level ground only. The other wheels must be secured by means of chock blocks to prevent tractor runaway.

The tractor must be supported safely (to avoid accidents).

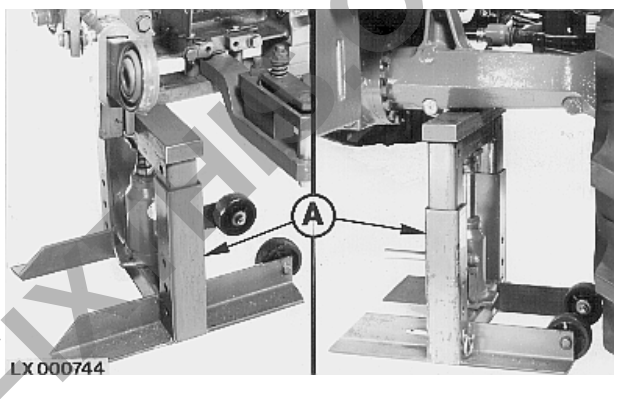

LX000744 —UN—15SEP94

Raise tractor and support it securely with support stand JT05725 (A).

LX25500,000026E -19-19JUN09-1/5

Remove the front wheels (with front-wheel drive axle)

1. Take off the wheel nuts.
2. Take the front wheel off the hub.



LX1033745 —UN—20NOV03

Continued on next page

LX25500,000026E -19-19JUN09-2/5

PREVIEW - YOUFIXTHIS.COM

Download full manual at youfixthis.com

Remove and Recondition the Bearing Support

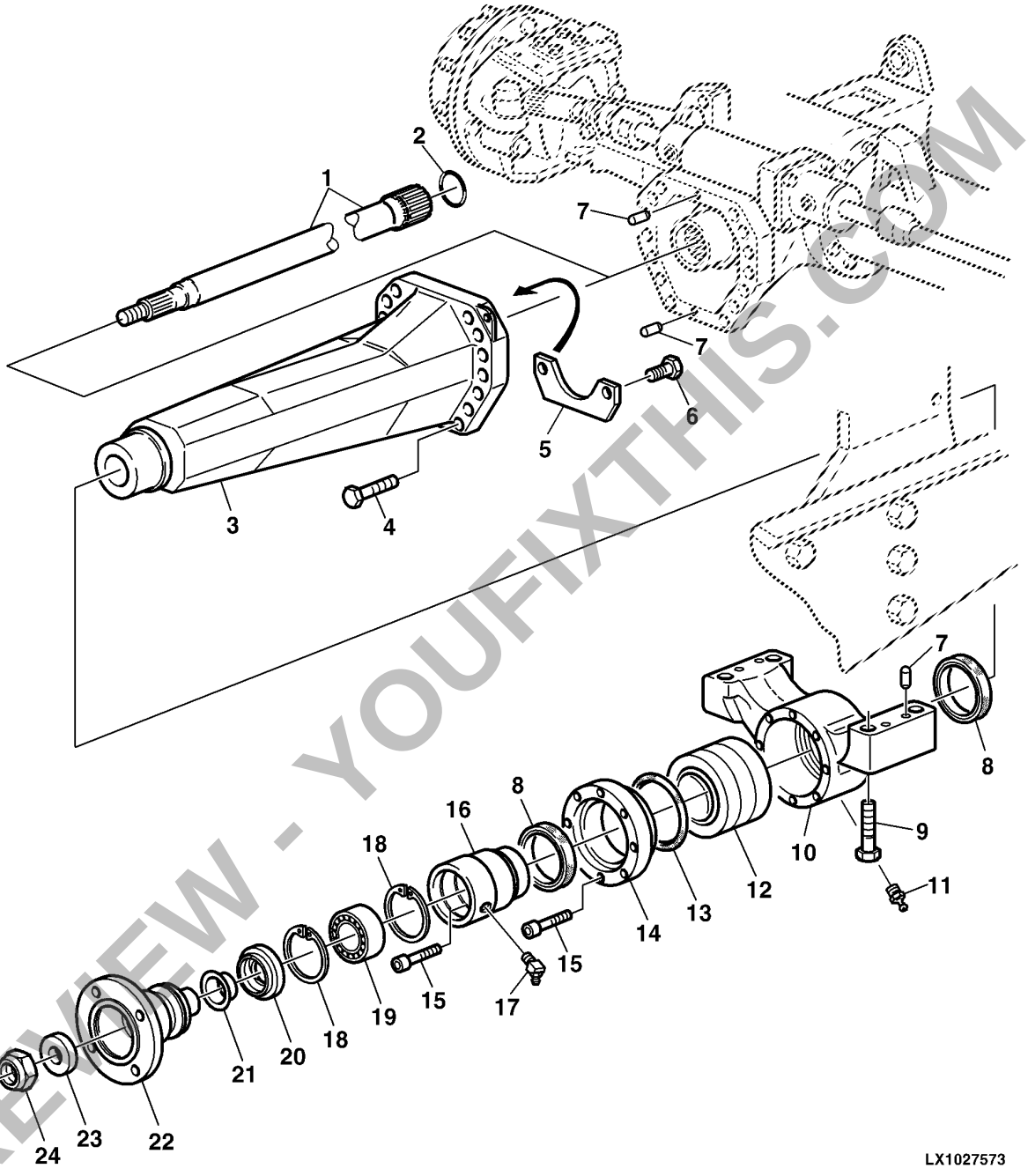

LX1027573 —UN—20SEP01

1— Drive shaft
2— O-ring
3— Housing
4— Screw (14 used)
5— Bracket
6— Screw (2 used)
7— Dowel pin (4 used)
8— Seal ring (2 used)
9— Screw (4 used)
10— Bearing support
11— Grease fitting
12— Bearing
13— O-ring
14— End plate
15— Screw (16 used)
16— Bearing quill
17— Grease fitting
18— Snap ring (2 used)
19— Ball bearing
20— Seal ring
21— Sleeve
22— Flange
23— Washer
24— Nut

Preliminary work:

See “Relieve Pressure in the Hydraulic System” in Section 80.

Continued on next page

LX25597,0000468 -19-20MAY08-1/23

PREVIEW - YOUFIXTHIS.COM
Download full manual at youfixthis.com

15. Take the two cap screws out of the top of the roof.

    Screw in lifting eyes DFLX5 (B; dealer-fabricated) up to the collar and tighten.

CAUTION: The cab weighs approx. 800 kg (1765 lb). This fact must be borne in mind when fabricating the two lifting eyes and selecting an appropriate hoist. (RISK OF ACCIDENT).

IMPORTANT: Adjust the width of lifting sling (A) (JDG23) to match the distance between the two lifting eyes (B). Only with the weight distributed in this way can the maximum load capacity of the lifting eyes be achieved.

    Use lifting sling JDG23 (A) and attach cab to a suitable hoist.

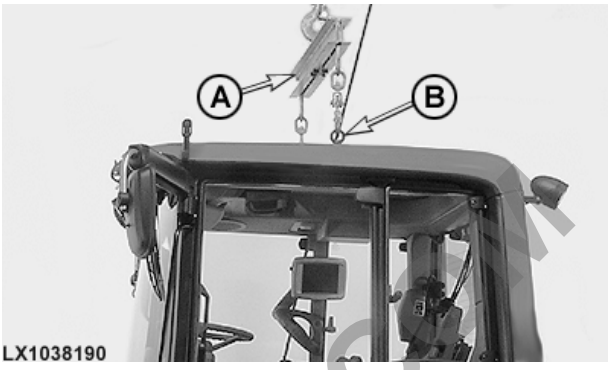

LX1038190 —UN—21APR06

A—Lifting sling JDG23

B—Lifting eyes DFLX5 (dealer-fabricated)

OULXA64,0001A4E -19-27MAY08-12/17

16. Remove both front cab mounting screws.

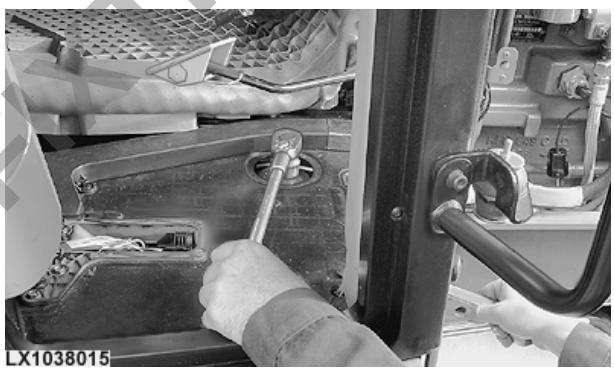

LX1038015 —UN—19APR06

OULXA64,0001A4E -19-27MAY08-13/17

17. **Cab without cab suspension:**

CAUTION: Be careful. Danger of pinching!

    Remove rear screws (A) on both sides.

NOTE: Loosen the screw as far as possible and then, when lifting the cab, completely remove it from the final drive housing.

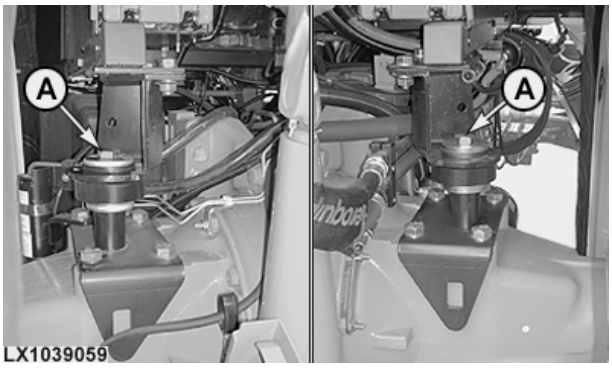

LX1039059 —UN—18JUL06

Continued on next page

OULXA64,0001A4E -19-27MAY08-14/17

PREVIEW - YOUFIXTHIS.COM

Download full manual at youfixthis.com

NOTE: Black cable: narrow terminal, red cable: broad terminal.

[1]If equipped

LX25458,000050E -19-16JAN07-2/3

mechanical

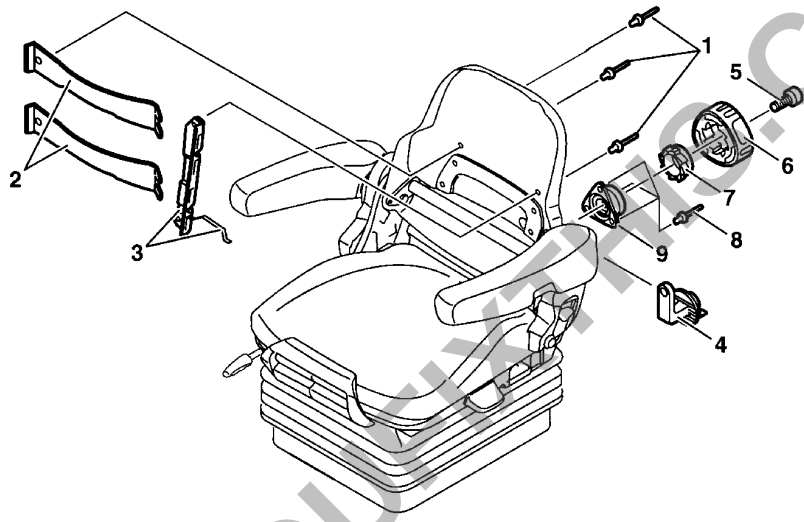

LX1021400

LX1021400 —UN—18AUG98

1— Rivets
2— Springs
3— Bracket
4— Carrier
5— Hex. socket screw
6— Adjusting knob
7— Gear
8— Rivets
9— Loop-spring brake

1. Remove backrest cushion and storage pocket.
2. Knock out rivets (1), then disengage springs (2) from bracket (3) and remove.
3. Disengage bracket (3) from carrier (4).
4. Take out hex. socket screw (5) and lift off adjusting knob (6) together with gear (7).
5. Knock out rivets (8) and remove loop-spring brake (9) and carrier (4).
6. Install and reassemble in reverse order.

LX25458,000050E -19-16JAN07-3/3

PREVIEW - YOUFIXTHIS.COM

Download full manual at youfixthis.com

Remove the Accumulator

1. Relieve the pressure in the hydraulic system. See "Relieve the Pressure in the Hydraulic System" in this Group.

NOTE: What follows applies to both of the cab suspension accumulators.

NOTE: Use a suitable container to trap all leaking hydraulic oil as it emerges.

2. Unfasten and remove accumulator (A).
3. If necessary, recondition the accumulator. See "Recondition the Accumulator" in this Group.

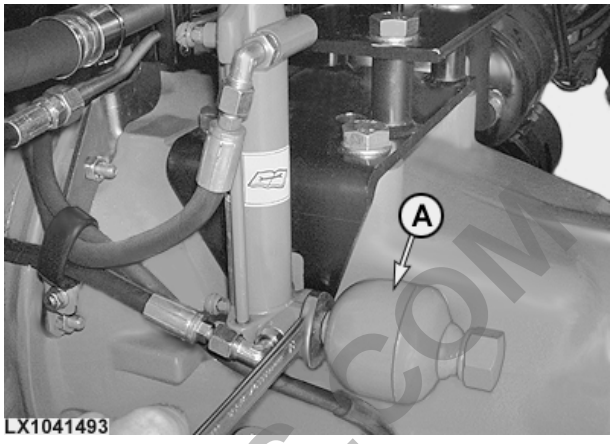

LX1041493 —UN—09AUG06

LX25458,0000489 -19-04AUG06-1/1

Recondition the Accumulator

IMPORTANT: For safety reasons the accumulators must be replaced every 10 years.

1. If necessary, remove the accumulator. See Remove the Accumulator in this Group.

NOTE: What follows applies to both of the cab suspension accumulators.

2. Relieve the pressure in the hydraulic system. See Relieve Hydraulic System Pressure in this Group.
3. Remove seal nut (E) from accumulator (A).
4. Take out the filler screw (D). **Nitrogen escapes at this point.**
5. Remove seal ring (C).
6. Clean all sealing surfaces and use a new seal ring.
7. Re-install filler screw (D) in accumulator (A).

Specification	
Accumulator, filler screw—Torque	20 N·m 15 lb-ft

IMPORTANT: The accumulator must be charged with nitrogen. See Cab Suspension - Check and Adjust the Nitrogen Precharge in Section 290, Group 15 in the relevant technical manual.

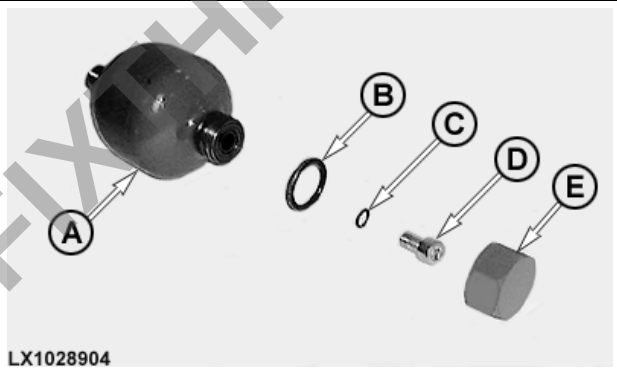

LX1028904 —UN—27MAY02

8. After charge procedure has been completed, check O-ring for damage (replace, if necessary), re-install seal nut (E) on accumulator (A) and tighten as specified.

Specification	
Accumulator seal nut—Torque	30^{+5} N·m 22^{+4} lb-ft

9. If necessary, install the accumulator. See Install the Accumulator in this Group.

LX25458,0000191 -19-02DEC08-1/1

PREVIEW - YOUFIXTHIS.COM

Download full manual at youfixthis.com

PREVIEW ONLY

You're viewing 25 of 1054 pages

The full manual includes:

- All 1054 pages, complete
- Searchable PDF (find any keyword)
- No watermarks
- Instant download
- Print-ready quality

GET FULL MANUAL NOW

John Deere 7430 Premium, 7530 Premium Repair

Scan or click anywhere
youfixthis.com

Click anywhere on this page to get the full manual