# Group 01 - Safety Information

## Recognize Safety Information



***Safety alert Symbols***










***Safety Alert Symbols***

**This is the safety alert symbol. When you see this symbol on your machine or in this manual, be alert for the potential of personal injury.**

Follow the precautions and safe operating practices highlighted by this symbol.

A signal word — DANGER, WARNING, or CAUTION — is used with the safety alert symbol. DANGER identifies the most serious hazards.

On your machine, DANGER signs are red in color, WARNING signs are orange, and CAUTION signs are yellow. DANGER and WARNING signs are located near specific hazards. General precautions are on CAUTION labels.

## Follow Safety Instructions



***Safety Messages***

Carefully read all safety messages in this manual and on your machine safety signs. Keep safety signs in good condition. Replace missing or damaged safety signs. Be sure new equipment components and repair parts include the current safety signs. Replacement safety signs are available from your John Deere dealer.

There can be additional safety information contained on parts and components sourced from suppliers that is not reproduced in

PREVIEW - YOUFIXTHIS.COM


Download full manual at youfixthis.com

# Group 10 - Engine Control Unit (ECU) Diagnostic Trouble Codes

## Engine Control Unit (ECU) Diagnostic Trouble Codes

The diagnostic trouble code number is indicated by a Suspect Parameter Number (SPN) and a Failure Mode Indicator (FMI) number. In the example **000107.00** , 107 is the SPN and 00 is the FMI number.

Diagnostic trouble codes can be displayed using advanced display unit (ADU) or by using Service ADVISOR ™ .

- See Display Unit—Main Menu—Codes . (Operator's Manual.)
- See Reading Diagnostic Trouble Codes with Service ADVISOR™ Diagnostic Application . (Group 9015-20.)



***Engine Component Technical Manuals***

For in-depth diagnostics on machine specific ECU diagnostic trouble codes, see specific code diagnostic procedures in this group. Additional engine control unit DTC diagnostic procedures for John Deere PowerTech Plus ™ engines are located in component technical manual, 9.0L Diesel Engines—Level 14 Electronic Fuel System with Denso HPCR . (CTM385.)

PREVIEW - YOUFIXTHIS.COM


Download full manual at youfixthis.com

# Group 10 - Operational Checkout Procedure

## Operational Checkout

Use this procedure to make a quick check of machine operation by doing a walk-around inspection and performing specific checks from the operator seat.

Complete visual checks (oil levels, oil condition, external leaks, loose hardware, linkage, wiring, etc.) before performing checkout.

Most checks will require machine systems to be at normal operating temperatures and a level area with adequate space to operate machine. Some checks may require varied surfaces.

No special tools are necessary to perform the checkout.

If no problem is found, go to next check. If a problem is indicated, an additional check or repair procedure will be suggested.

## Diagnostic Trouble Code Check

**( 1 ) Display and Clear Trouble Codes**

### Action:

**Always check for diagnostic trouble codes and correct them before performing operational checkout.**

Check for active and stored diagnostic trouble codes (DTCs).

Diagnostic trouble codes can be displayed by using one of the following methods:

- Advanced Display Unit (ADU)
  - To access DTCs using ADU, see Display Unit—Main Menu—Codes . (Operator′s Manual.)
- Service ADVISOR ™ Diagnostic Application
  - To access DTCs using Service ADVISOR™ diagnostic application, see Reading Diagnostic Trouble Codes with Service ADVISOR™ Diagnostic Application . (Group 9015-20.)

sss:

Are diagnostic trouble codes present?

### Result:

**YES:**Correct all diagnostic trouble codes before proceeding.

**NO:**Continue with operational checkout.

## Operational Checks—Ignition OFF, Engine OFF Checks

**( 1 ) Horn Check**

### Action:

Push horn button, see Horn Button . (Operator′s Manual.)

sss:

Does horn activate?

### Result:

**YES:**Go to next check.

**NO:**Check horn circuit. See System Functional Schematic . (Group 9015-10.)

**( 2 ) Seat Control Checks**

### Action:

**→NOTE:**

**For seat adjustment procedures, see Seat Adjustment . (Operator′s Manual.)**

**If machine is equipped with air seat, ignition ON/engine START switch must be ON to raise seat.**

PREVIEW - YOUFIXTHIS.COM


Download full manual at youfixthis.com

# Group 05 - Theory of Operation

## John Deere Engine

**→NOTE:**

**See Engine Identification**

For additional theory of operation information on John Deere PowerTech ™ Plus engines and components for engine model 6090HDW06, see the following component technical manual (CTM).

- 9.0L OEM Diesel Engines—Base Engine Repair . (CTM400.)
- 9.0L Diesel Engines—Level 14 Electronic Fuel System with Denso HPCR . (CTM385.)

For additional information on John Deere PowerTech™ Plus engines and components for engine model 6090HDW08, see the following component technical manual (CTM).

- 9.0L OEM Diesel Engines—Base Engine Repair . (CTM400.)
- 9.0L Diesel Engines—Level 14 Electronic Fuel System with Denso HPCR . (CTM385.)

PREVIEW - YOUFIXTHIS.COM


Download full manual at youfixthis.com

# Group 05 - System Information

## Electrical Diagram Information

### Explanation of Wire Markings

**→NOTE:**

**All system functional schematics, circuit schematics, and wiring diagrams are shown with key switch in the OFF position.**

### System Functional Schematic Diagram

PREVIEW - YOUFIXTHIS.COM


Download full manual at youfixthis.com

# Group 05 - Theory of Operation

## TeamMate™ Axles

For additional information on TeamMate ™ axles and components, see TeamMate™ II 1600 Series Inboard Planetary Axles . (CTM138719.)

PREVIEW - YOUFIXTHIS.COM


Download full manual at youfixthis.com

# Group 05 - Theory of Operation

## Loader Hydraulic System Operation

**→NOTE:**

**For location of components:**

- **See Steering and Hydraulic Cooling Fan Circuit Component Location . (Group 9025-15.)**
- **See Loader and Hydraulic Cooling Circuit Component Location . (Group 9025-15.)**
- **See Ride Control, Pin Disconnect, and Hydraulic Filter Circuit Component Location . (Group 9025-15.)**
- **See Service Brake, Park Brake, Differential Lock, and Axle Cooling Circuit Component Location . (Group 9025-15.)**

**For system operation, see Hydraulic System Schematic . (Group 9025-15.)**

The hydraulic system uses three variable-displacement, axial-piston, pumps with load sense and pressure control. They are identified as steering/loader hydraulic pump, loader hydraulic pump, and hydraulic fan pump. The steering/loader and loader hydraulic pumps have the same oil displacement rating. Although similar in design and operation as the two main pumps, the hydraulic fan pump has a smaller displacement.

The major hydraulic functions are incorporated into two systems. The two systems are joined by a pressure compensating load sense system. The third system uses the hydraulic fan pump. Load sensing improves fuel economy and reduces heat buildup because horsepower is not wasted on excessive pump flow not being used.

The major components controlled are orbital steering, loader operations, and service brakes. Additional components, if equipped, are joystick steering, pin disconnect, spin control, and ride control.

Other hydraulic components, if equipped, are electric-drive motor-pump for secondary steering, hydraulic reversing fan for hydraulic oil cooling, and axle oil circulation and cooling. The axle oil circulation and cooling system uses fixed-displacement gear pumps mounted to the engine auxiliary drive.

The three pumps each have a separate oil supply from the hydraulic reservoir. There are no suction screens or filters in the reservoir. Each pump routes case drain oil individually back to the hydraulic reservoir. The case drain oil passes through a screen in the reservoir fitting before entering the reservoir. If the pump begins to or does fail, the screen traps debris that could contaminate the entire hydraulic system.

Both the steering/loader hydraulic pump and loader hydraulic pump are mounted to the transmission. The splined shaft of the steering/loader hydraulic pump is inserted into the splined coupler on the end of the transmission impeller shaft. The loader hydraulic pump is driven off the auxiliary power takeoff on the front of the transmission. The fan pump is mounted to the engine auxiliary drive.

The oil flow generated by the steering/loader hydraulic pump is directed to the hydraulic pump manifold. The hydraulic pump manifold distributes hydraulic oil to the steering system, with priority given to the steering system and service brakes. It also pressure charges the pilot accumulator and provides a regulated oil pressure for the pilot controller.

When the machine is not being steered, or if pump flow is greater than steering demand, the steering priority valve shifts and steering/loader hydraulic pump oil flow joins with loader hydraulic pump flow to assist in the loader control valve functions.

When a steering valve is actuated, the steering valve work port pressure is sent out as load sense to the hydraulic pump manifold and matched with pilot pressure. The highest pressure is sent to both hydraulic pump control valves as the hydraulic system load sense pressure. The hydraulic pumps respond by swashing, or de-swashing, to maintain a differential pressure above the hydraulic system load sense pressure.

The hydraulic pump manifold receives load sense signals from the steering and loader functions, with priority given to steering. Later models contain a in-line attenuator to help maintain stable load sense signal to the pump controls. The signals are resolved inside the manifold and then sent to the steering/loader hydraulic pump and loader hydraulic pump.

The steering system offers two methods of steering the machine. The orbital steering responds to the rotation of the steering wheel. The orbital steering valve uses the steering compensator valve that controls the differential pressure at the orbital steering valve. The joystick steering valve, if equipped, responds to an electrical signal from the steering joystick used, to control a bank of servo valves that meter hydraulic oil flow to steer the machine. The orbital steering has priority over the joystick steering system.

The hydraulic pump manifold also contains the load sense relief valve that limits the load sense signal sent to the pumps. The load sense signal limits the maximum operating pressure of the hydraulic system.

The load sense relief valve functions as a power management valve. The load sense relief valve contains a pulse width modulation solenoid that controls a proportional relief valve.

PREVIEW - YOUFIXTHIS.COM


Download full manual at youfixthis.com

# Group 05 - Theory of Operation

## Air Conditioning System Cycle of Operation

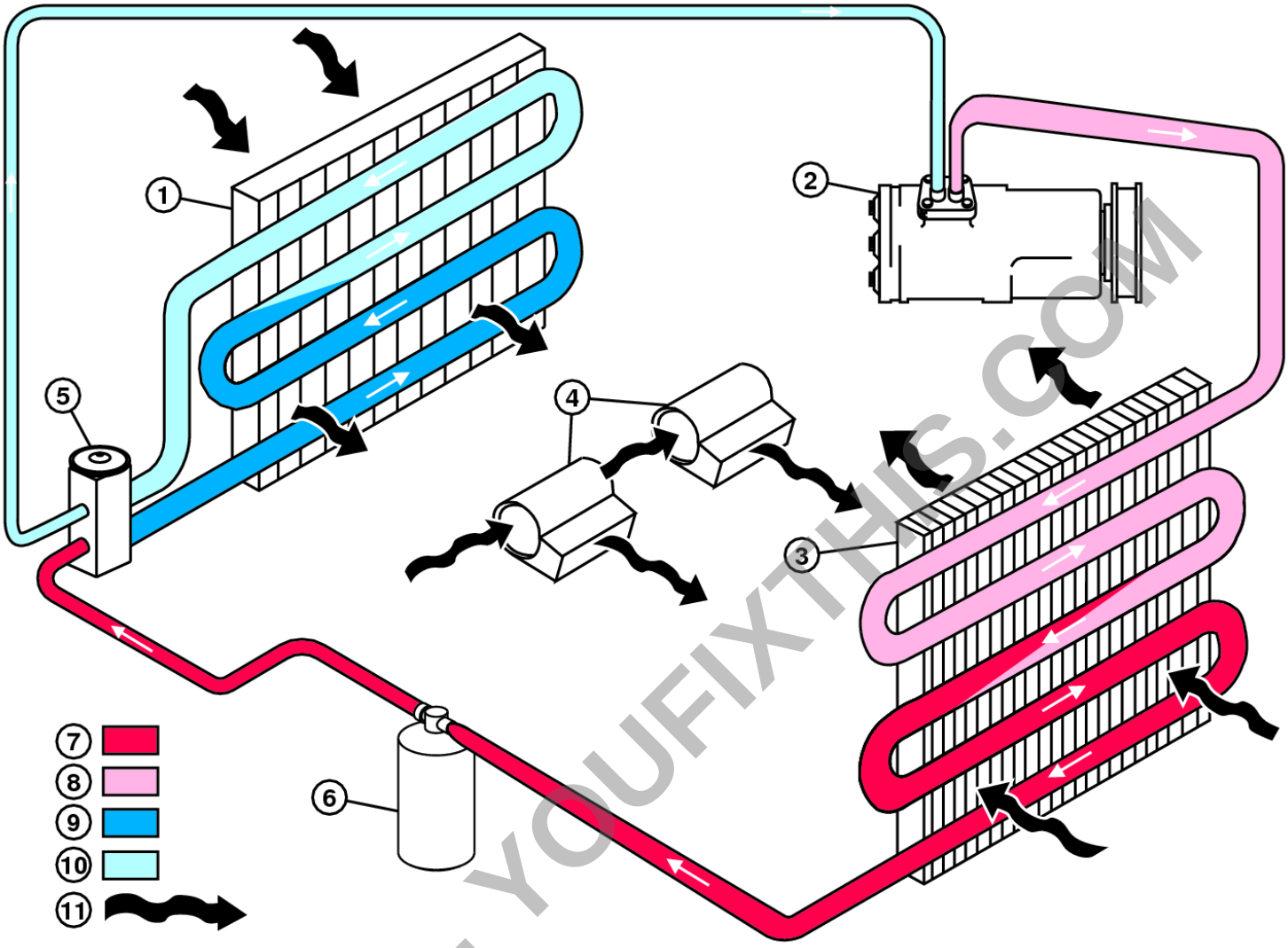


T142307

***Refrigerant System Cycle of Operation***

**LEGEND:**

| | |
|---|---|
| 1 | Evaporator Core |
| 2 | Compressor |
| 3 | Condenser Core |
| 4 | Circulation Blower Motor |
| 5 | Expansion Valve |
| 6 | Receiver-Dryer |
| 7 | High Pressure Liquid |
| 8 | High Pressure Gas |
| 9 | Low Pressure Liquid |
| 10 | Low Pressure Gas |
| 11 | Air Flow |

The compressor (2) is belt driven and engaged by an electromagnetic clutch. The air conditioning circuit automatically controls the compressor engagement or disengagement when the system is in operation. See Vehicle Control Unit (VCU) Circuit Theory of Operation . (Group 9015-15.)

The compressor draws low pressure gas (10) from the evaporator core (1) and compresses it into high pressure gas (8). This causes the temperature of the refrigerant to rise higher than that of outside air.

High pressure gas leaves the compressor (2) and flows through the condenser core (3) where heat is removed and transferred to outside air being drawn through the condenser core by the fan. Cooling refrigerant causes it to condense, and refrigerant leaves the condenser as high pressure liquid (7).

High pressure liquid flows into the receiver-dryer (6), where moisture and contaminants (acid, solids, etc.) are removed. The receiver-dryer may contain a color moisture indicator; blue indicates no moisture is present; pink indicates moisture is present.

PREVIEW - YOUFIXTHIS.COM


Download full manual at youfixthis.com

# Foreword

This manual is written for an experienced technician. Essential tools required in performing certain service work are identified in this manual and are recommended for use.

Live with safety: Read the safety messages in the introduction of this manual and the cautions presented throughout the text of the manual.

**CAUTION:**

This is the safety-alert symbol. When you see this symbol on the machine or in this manual, be alert to the potential for personal injury.

Technical manuals are divided in two parts: repair and operation and tests. Repair sections tell how to repair the components. Operation and tests sections help you identify the majority of routine failures quickly.

Information is organized in groups for the various components requiring service instruction. At the beginning of each group are summary listings of all applicable essential tools, service equipment and tools, other materials needed to do the job, service parts kits, specifications, wear tolerances, and torque values.

Technical Manuals are concise guides for specific machines. They are on-the-job guides containing only the vital information needed for diagnosis, analysis, testing, and repair.

Fundamental service information is available from other sources covering basic theory of operation, fundamentals of troubleshooting, general maintenance, and basic type of failures and their causes.

PREVIEW - YOUFIXTHIS.COM


Download full manual at youfixthis.com

***522373.04- Power Supply Low Voltage***

*44*

*Transmission control unit (TCU) supply voltage is lower than 18 volts.*

# Power Supply Low Voltage Diagnostic Procedure

**Alarm Level:**

No Warning Lamp

**( 1 ) Intermittent Check**

## Action:

Does diagnostic trouble code (DTC) periodically “go away”?

## Result:

**YES:**DTC is intermittent. See Intermittent Diagnostic Trouble Code (DTC) Diagnostics . (Group 9015-15.)

**NO:**Go to Fuse Check.

**( 2 ) Fuse Check**

## Action:

Ignition OFF.

Remove fuse (F18) and fuse (F28). See Fuse and Relay Specifications . (Group 9015-10.)

Check fuse (F18) and fuse (F28) for continuity.

Is continuity indicated in both fuses?

## Result:

**YES:**Go to Battery Check.

**NO:**Replace fuse(s) without continuity.

**( 3 ) Battery Check**

## Action:

Ignition OFF.

Check battery voltage.

Is voltage approximately 24 volts?

## Result:

**YES:**Go to Open Circuit Check.

**NO:**Clean and tighten battery terminals. See Check Battery Water Level and Terminals . (Operator′s Manual.) Charge batteries. See Using Battery Charger . (Operator′s Manual.)

**( 4 ) Open Circuit Check**

## Action:

Turn battery disconnect OFF.

Disconnect TCU connector (X23). See Load Center Harness (W3) Component Location . (Group 9015-10.)

Remove fuse (F18) and fuse (F28). See Fuse and Relay Specifications . (Group 9015-10.)

Check circuit P28 RED for continuity between pin 45 on TCU connector (X23) and fuse (F28) socket.

Check circuit P18 RED for continuity between pin 23 on TCU connector (X23) and fuse (F18) socket.

Check circuit P18 RED for continuity between pin 68 on TCU connector (X23) and fuse (F18) socket.

Is continuity indicated in both circuits?

PREVIEW - YOUFIXTHIS.COM



Download full manual at youfixthis.com

***522406.04- Transmission Oil Temperature Sensor Short to Ground***

*44*

*Transmission oil temperature sensor circuit is short to ground.*

# Transmission Oil Temperature Sensor Short to Ground Diagnostic Procedure

**Alarm Level:**

No Warning Lamp

**( 1 ) Intermittent Check**

## Action:

Does diagnostic trouble code (DTC) periodically “go away”?

## Result:

**YES:**DTC is intermittent. See Intermittent Diagnostic Trouble Code (DTC) Diagnostics . (Group 9015-15.)

**NO:**Go to Component Check.

**( 2 ) Component Check**

## Action:

Ignition OFF.

Disconnect transmission harness-to-transmission control valve harness connector (X36). See Transmission Harness (W10) Component Location . (Group 9015-10.)

Measure resistance between pins 8 and 9 on transmission control valve harness side of connector (X36).

Compare resistance to specification. See Electrical Component Specifications . (Group 9015-25.)

Is resistance within specification?

## Result:

**YES:**Go to Short Circuit Check.

**NO:**Go to Circuit Check—Control Valve Harness.

**( 3 ) Circuit Check—Control Valve Harness**

## Action:

Battery disconnect OFF.

Disassemble transmission control valve. See Transmission Hydraulic Control Valve Disassemble and Assemble . (Group 0360.)

Disconnect transmission oil temperature sensor (B32) connector.

Measure resistance across sensor pins.

Compare resistance to specification. See Electrical Component Specifications . (Group 9015-25.)

Is resistance within specification?

## Result:

**YES:**Open or short circuit in transmission control valve harness. Repair circuit or replace harness. See Transmission Hydraulic Control Valve Disassemble and Assemble . (Group 0360.)

**NO:**Transmission oil temperature sensor (B32) malfunction. Replace sensor.

**( 4 ) Short Circuit Check**

## Action:

Ignition OFF.

Disconnect transmission harness-to-transmission control valve harness connector (X36). See Transmission Harness (W10)

PREVIEW - YOUFIXTHIS.COM



Download full manual at youfixthis.com

## Result:

**YES:**Go to next check.

**NO:**Circuit without continuity indicated is open. Repair or replace harness as necessary.

**( 4 ) Program Controller**

## Action:

Program VCU.

Check for active codes.

Is VCU code 001639.08 present?

## Result:

**YES:**Fan speed sensor (B76) malfunction. Replace sensor.

**NO:**Checks complete.

PREVIEW - YOUFIXTHIS.COM


Download full manual at youfixthis.com

**NO:**Repair CAN circuit.

PREVIEW - YOUFIXTHIS.COM


Download full manual at youfixthis.com

***523137.03- Steering Pressure Sensor Short to Power***

*328*

*Steering system pressure sensor (B25) circuit is short to power.*

# Steering Pressure Sensor Short to Power Diagnostic Procedure

**( 1 ) Intermittent Check**

## Action:

Does diagnostic trouble code (DTC) periodically “go away”?

## Result:

**YES:**DTC is intermittent. See Intermittent Diagnostic Trouble Code (DTC) Diagnostics . (Group 9015-15.)

**NO:**Go to Short Circuit Check.

**( 2 ) Short Circuit Check**

## Action:

Ignition OFF.

Disconnect steering system pressure sensor (B25) connector. See Engine Frame Harness (W5) Component Location . (Group 9015-10.) For additional information on testing hydraulic pressure sensors, see Hydraulic Pressure Sensor Test . (Group 9015-25.)

Ignition ON.

For **744K—844K (S.N. —646371)** , check circuit N08 YEL for voltage at pin A on steering system pressure sensor (B25) connector.

For **444K—724K** and **744K—844K (S.N. 646372— )** , check circuit N08 YEL for voltage at pin C on steering system pressure sensor (B25) connector.

Is system voltage (approximately 24 V) present?

## Result:

**YES:**Circuit N08 YEL is short to power. Repair circuit or replace harness. See Load Center Harness (W3) Wiring Diagram and see Engine Frame Harness (W5) Wiring Diagram . (Group 9015-10.)

**NO:**Go to Harness Check.

**( 3 ) Harness Check**

## Action:

Turn battery disconnect switch OFF.

Disconnect steering system pressure sensor (B25) connector. See Engine Frame Harness (W5) Component Location . (Group 9015-10.)

Disconnect vehicle control unit (VCU) connectors (J1, J2, J3, and J4) (X40, X41, X42, and X43). See Load Center Harness (W3) Component Location . (Group 9015-10.)

Check for continuity between pin 22 (circuit N08 YEL) on VCU connector (J3) (X42) and all other pins on VCU connectors (J1, J2, J3, and J4) (X40, X41, X42, and X43).

Is continuity indicated with any pins?

## Result:

**YES:**Circuit N08 YEL is short to circuit with continuity indicated. Repair circuit or replace harness. See Load Center Harness (W3) Wiring Diagram and see Engine Frame Harness (W5) Wiring Diagram . (Group 9015-10.)

**NO:**Program controller.

PREVIEW - YOUFIXTHIS.COM



Download full manual at youfixthis.com

***523339.04- Axle Disconnect Keypad Stuck***

*194*

*Axle disconnect keypad on the sealed switch module (SSM) is stuck.*

# Axle Disconnect Keypad Stuck Diagnostic Procedure

**Alarm Level:**

No Warning Lamp

**( 1 ) Intermittent Check**

## Action:

Does diagnostic trouble code (DTC) periodically “go away”?

## Result:

**YES:**DTC is intermittent. See Intermittent Diagnostic Trouble Code (DTC) Diagnostics . (Group 9015-15.)

**NO:**Go to Reset Controller.

**( 2 ) Reset Controller**

## Action:

**→NOTE:**

**SSM will not store diagnostic trouble codes; when ignition is cycled, SSM will reset and all codes will be lost.**

Document all diagnostic codes.

Ignition OFF.

Wait 20 seconds.

Ignition ON.

Is SSM code 523339.04 present?

## Result:

**YES:**Go to Component Check.

**NO:**Checks complete.

**( 3 ) Component Check**

## Action:

Perform SSM test to verify keypad is malfunctioning. See Display Unit—Main Menu—Diagnostics—Switch Module . (Operator´s Manual.)

Does SSM test good?

## Result:

**YES:**Program controller.

**NO:**Go to Controller Area Network (CAN) Circuit Check.

**( 4 ) Controller Area Network (CAN) Circuit Check**

## Action:

Perform CAN Circuit Test . (Group 9015-25.)

Does CAN circuit test good?

PREVIEW - YOUFIXTHIS.COM



Download full manual at youfixthis.com

### *298985.19- CAN Communication Lost For VCU*

*261*

*Controller area network (CAN) communication error; the joystick steering valve (JSV) control has lost communication with the vehicle control unit (VCU).*

# CAN Communication Lost for VCU Diagnostic Procedure

**( 1 ) Controller Values Check**

## Action:

Ignition ON.

View JSV values by accessing the DIAGNOSTICS / JOYSTICK STEERING submenu on the advanced display unit (ADU). See Display Unit—Main Menu—Diagnostics—Joystick Steering—If Equipped . (Operators Manual.)

Does the ADU show values for joystick steering valve?

## Result:

**YES:**Go to Fuse Check.

**NO:**Replace JSV. See Joystick Steering Valve Remove and Install—If Equipped . (Group 0960.)

**( 2 ) Fuse Check**

## Action:

Ignition OFF.

Remove fuses (F15 and F21). See Fuse and Relay Specifications . (Group 9015-10.)

Check fuses (F15 and F21) for continuity.

Is continuity indicated?

## Result:

**YES:**Go to Voltage Check.

**NO:**Replace fuses (F15 or F21).

**( 3 ) Voltage Check**

## Action:

Ignition OFF.

Disconnect VCU connector (X40). See Load Center Harness (W3) Component Location . (Group 9015-10.)

Ignition ON.

Check circuit P21 RED for voltage at pin L1 on connector (X40).

Check circuit P15 RED for voltage at pin M1 on connector (X40).

Is system voltage (approximately 24 volts) present for both circuits?

## Result:

**YES:**Go to Ground Circuit Check.

**NO:**Circuit without system voltage present is open. Repair circuit or replace harness. See Load Center Harness (W3) Wiring Diagram . (Group 9015-10.)

**( 4 ) Ground Circuit Check**

## Action:

Ignition OFF.

Disconnect VCU connectors (X40 and X41). See Load Center Harness (W3) Component Location . (Group 9015-10.)

Check circuit G01 BLK for ground at pins F3, L2 and M2 on VCU connector (X40).

Check circuit G01 BLK for ground at pin 2 on VCU connector (X41).

PREVIEW - YOUFIXTHIS.COM



Download full manual at youfixthis.com

the bottle. Keep the protective plastic in place when the lid is taken off.

**[3] -**

**→NOTE:**

**The plastic bag creates a protective covering for the sample so that external contaminants are not introduced into the fluid sample.**

Holding bag tight across bottle, puncture hole in bag with cap probe line and insert line about 13 mm (0.5 in.) into the sample bottle.




***Puncture Plastic Bag with Cap Probe Line***

**[4] -**

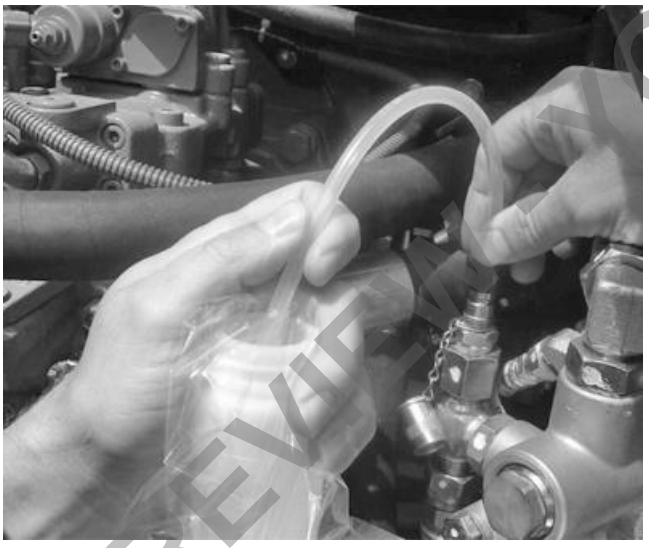

***Collect Sample Fluid (excavator shown)***

Hold the cap probe line inside the bottle. Press, and hold the cap probe to the valve to release the sample fluid into the bottle.

**[5] -** Fill the sample bottle about 3/4 full of fluid.

| Item | Measurement | Specification |
|---|---|---|
| Fluid Sample | Volume (approximate) | 75 mL |
| | | 2.5 oz. |

**[6] -** After a representative sample is obtained, remove the tube and return the lid to the container. Leave the lid and bottle inside the plastic bag and the protective sheet attached underneath the lid (if applicable).

When properly performed, sample oil is warm, indicating that all stagnant fluid was removed during the purge process and not sent to the lab.

**[7] -**

PREVIEW - YOUFIXTHIS.COM


Download full manual at youfixthis.com

**LEGEND:**

| | |
|---|---|
| 3 | Continued on Sheet 3 |
| 5 | Continued on Sheet 5 |
| B14 | Analog Throttle Position Sensor |
| B33 | Clutch Cut-Off Sensor |
| E32 | Seat Heater (if equipped) |
| E33 | Seat Back Rest Heater (if equipped) |
| M3 | Front Wiper Motor |
| R1 | CAN 1 Termination Resistor |
| R2 | CAN 1 Termination Resistor |
| S13 | Differential Lock Foot Switch |
| S18 | Counter Switch |
| S32 | Air Seat Adjust Switch (if equipped) |
| X26 | Load Center Harness-to-Front Console Harness 12-Pin Connector |
| X27 | Joystick Loader FNR Switch and Gear Select Switches Connector |
| X29 | Pilot Controller 8-Pin Connector |
| X31 | Load Center Harness-to-Joystick Steering Harness 23-Pin Connector |
| X33 | Load Center Harness-to-Air Adjust Seat Harness 2-Pin Connector |
| X47 | Heated Seat 2-Pin Connector |
| X48 | Advanced Display Unit (ADU) 10-Pin Connector |
| X53 | Sealed Switch Module (SSM) 6-Pin Connector |
| X95 | 4-Pin Connector (not used) |
| X103 | Advanced Payload Scale (APS) Unit Connector |
| X518 | R91 BLK Splice |
| X519 | R12 BLK Splice |
| X520 | M13 LT GRN Splice |
| X521 | M12 YEL Splice |
| X522 | R19 BLK Splice |
| X523 | M23 LT GRN Splice |
| X524 | M22 YEL Splice |
| X525 | G01 BLK Splice |
| X526 | P28 RED Splice |
| X527 | T16 BLU Splice |
| X528 | P11 RED Splice |
| X529 | T17 BLU Splice |
| X530 | P08 RED Splice |
| X531 | T22 BLU Splice |
| X532 | G04 BLK Splice |
| X533 | R12 BLK Splice |
| X534 | T26 BLU Splice |
| X535 | M13 LT GRN Splice |
| X536 | T25 BLU Splice |
| X537 | M12 YEL Splice |
| X538 | T24 BLU Splice |
| X539 | P69 RED Splice |
| X540 | T23 BLU Splice |
| X541 | A01 ORG Splice |
| X542 | P13 RED Splice |
| X543 | P23 RED Splice |
| X544 | P55 RED Splice |
| X546 | R12 BLK Splice |
| X547 | M13 LT GRN Splice |
| X548 | M12 YEL Splice |
| X589 | R12 BLK Splice |
| X590 | M13 LT GRN Splice |
| X591 | M12 YEL Splice |
| Y46 | Return-to-Dig (RTD) Detent Coil |
| Y47 | Boom Height Kickout (BHKO) Detent Coil |
| Y48 | Return-to-Carry (RTC)/Float Detent Coil |

PREVIEW - YOUFIXTHIS.COM


Download full manual at youfixthis.com

# Group 15 - Sub-System Diagnostics

PREVIEW - YOUFIXTHIS.COM


Download full manual at youfixthis.com

sensor has a unique identification number that the TPM system uses to identify the sensor. Only when the ADU is set up for programming can this function be used. The unique sensor identification number can be learned by pressing LEARN on the JDG10928 SmartWave Advanced Maintenance Tool. Holding it against the sidewall by the valve stem or adjacent to the sensor, causes the sensor to transmit its signal. This is referred as, ping the sensor. See TPM—Programming Sensors with SmartWave® Advanced Maintenance Tool . (Group 9015-20.)

The JDG10928 SmartWave Advanced Maintenance Tool displays the tire pressure sensor′s unique identification number and saves the data for up to 100 sensors. This information can also be downloaded to a computer through the RS232 connection. Software updates are done for the device through RS232 connection.

The TPM system sensor identification number can be set up without the use of the SmartWave Advanced Maintenance Tool, only if you know the sensor identification number. The Sensor identification number can be found on each sensor. The identification number can be programmed into the TPM system through the ADU and sealed switch module (SSM) (A6). See TPM—Programming Using Sensor Identification Numbers . (Group 9015-20.)

PREVIEW - YOUFIXTHIS.COM


Download full manual at youfixthis.com

| | |
|---|---|
| 5 | Transmission Control Valve |
| 6 | Hydraulic Pump Drive One |
| 7 | Transmission Pump |
| 8 | K1 Clutch |
| 9 | K2 Clutch |
| 10 | K3 Clutch |
| 11 | Output—Front Axle |
| 12 | Output—Rear Axle |
| 13 | Idler Gear |
| 14 | K4 Clutch |
| 15 | KR Clutch |
| 16 | KV Clutch |

This machine can be equipped with either a four-speed or five-speed transmission.

The four-speed transmission is a hydraulically engaged four-speed forward, three-speed reverse countershaft type, powershift transmission that uses a single-stage, dual-phase torque converter. For information on the torque converter, see Standard Torque Converter Operation . (Group 9020-05.)

The five-speed transmission is a hydraulically engaged five-speed forward, three-speed reverse countershaft type, powershift transmission that uses a single-stage, dual-phase torque converter with lockup clutch. For information on torque converter with lockup clutch, see Torque Converter With Lockup Clutch Operation—If Equipped . (Group 9020-05.)

The torque converter supplies power to the input drive gear which is in constant mesh with the KV and KR clutch gears. The KR clutch gear meshes with the K4 clutch gear through an idler gear.

The engine power is transferred to the output shaft of the transmission at different speed ratios, depending on which directional and speed clutches are engaged. A combination of two clutch packs must be engaged for power to be transferred to the transmission output: one clutch pack for direction and one clutch pack for speed.

For information on solenoid/clutch pack combinations, see Transmission Clutch Pack Engagement and Solenoids Activated . (Group 9020-05.)

For an example of power flow through the transmission, see Transmission Operation—First Gear Forward . (Group 9020-05.)

Individual proportional solenoid valves control the main pressure oil which is routed through a passage in the countershafts to hydraulically engage each clutch. The rate of pressure rise behind each clutch piston is determined by the transmission control unit (TCU) providing the current to each valve.

For information on the TCU, proportional solenoid valve, and clutch activation, see the following:

- Transmission Control Unit (TCU) Circuit Theory of Operation . (Group 9015-15.)
- Transmission Control Valve Component Operation . (Group 9020-05.)
- Transmission Clutch Modulation Operation . (Group 9020-05.)

The power flow to the transmission output shaft can be interrupted by shifting the transmission to neutral using the FNR switch or by depressing the brake pedal (if clutch cut-off is enabled). For information on clutch cut-off operation, see Transmission Control Unit (TCU) Circuit Theory of Operation . (Group 9015-15.)

PREVIEW - YOUFIXTHIS.COM


Download full manual at youfixthis.com

# Park Brake Will Not Release

# Park Brake Will Not Release Diagnostic Procedure

**( 1 ) Diagnostic Trouble Code Check**

## Action:

Check for active diagnostic trouble codes (DTCs) using one of the following methods:

- Monitor Menus: See Display Unit—Main Menu—Codes—Active Codes . (Operator's Manual.)
- Service ADVISOR™ Application: See Reading Diagnostic Trouble Codes with Service ADVISOR™ Diagnostic Application . (Group 9015-20.)

Are any diagnostic trouble codes (DTCs) present?

## Result:

**YES:**Repair malfunction causing codes.

**NO:**Go to Fuse Check.

**( 2 ) Fuse Check**

## Action:

Ignition OFF.

Remove fuse(s) (F18, F28, and F40). See Fuse and Relay Specifications . (Group 9015-10.)

Check fuse(s) for continuity.

Is continuity indicated?

## Result:

**YES:**Go to Park Brake Oil Level Check.

**NO:**Replace fuse(s) without continuity indicated.

**( 3 ) Park Brake Oil Level Check**

## Action:

Check park brake oil level. See Check Park Brake Oil Level . (Operator's Manual.)

Is park brake oil level to specification?

## Result:

**YES:**Go to Breather Tube Plugged.

**NO:**Correct park brake oil level.

**( 4 ) Breather Tube Plugged**

## Action:

Check breather tube for dirt and debris.

Is breather tube plugged?

## Result:

**YES:**Clean breather tube.

**NO:**Go to Park Brake Pressure Switch Check.

**( 5 ) Park Brake Pressure Switch Check**

PREVIEW - YOUFIXTHIS.COM


Download full manual at youfixthis.com

# Joystick Steering Valve Operation—If Equipped

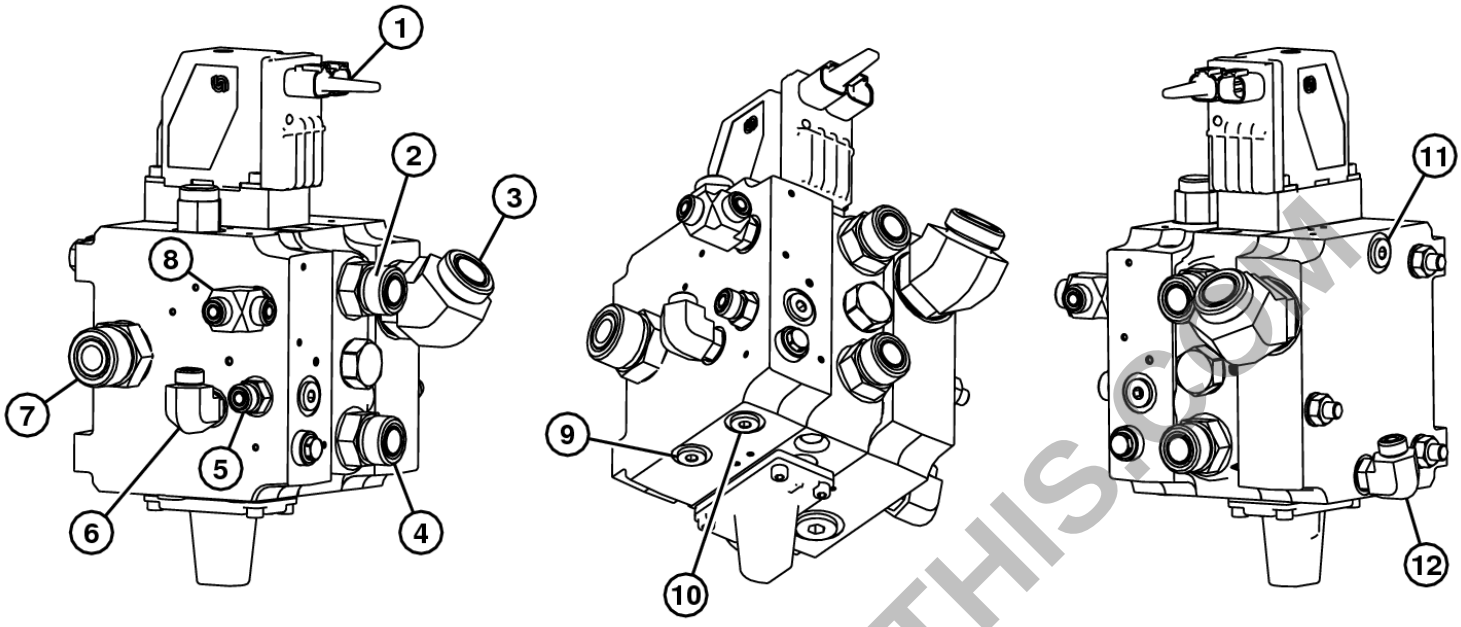


TX1045836

*Joystick Steering Valve Port Identification*

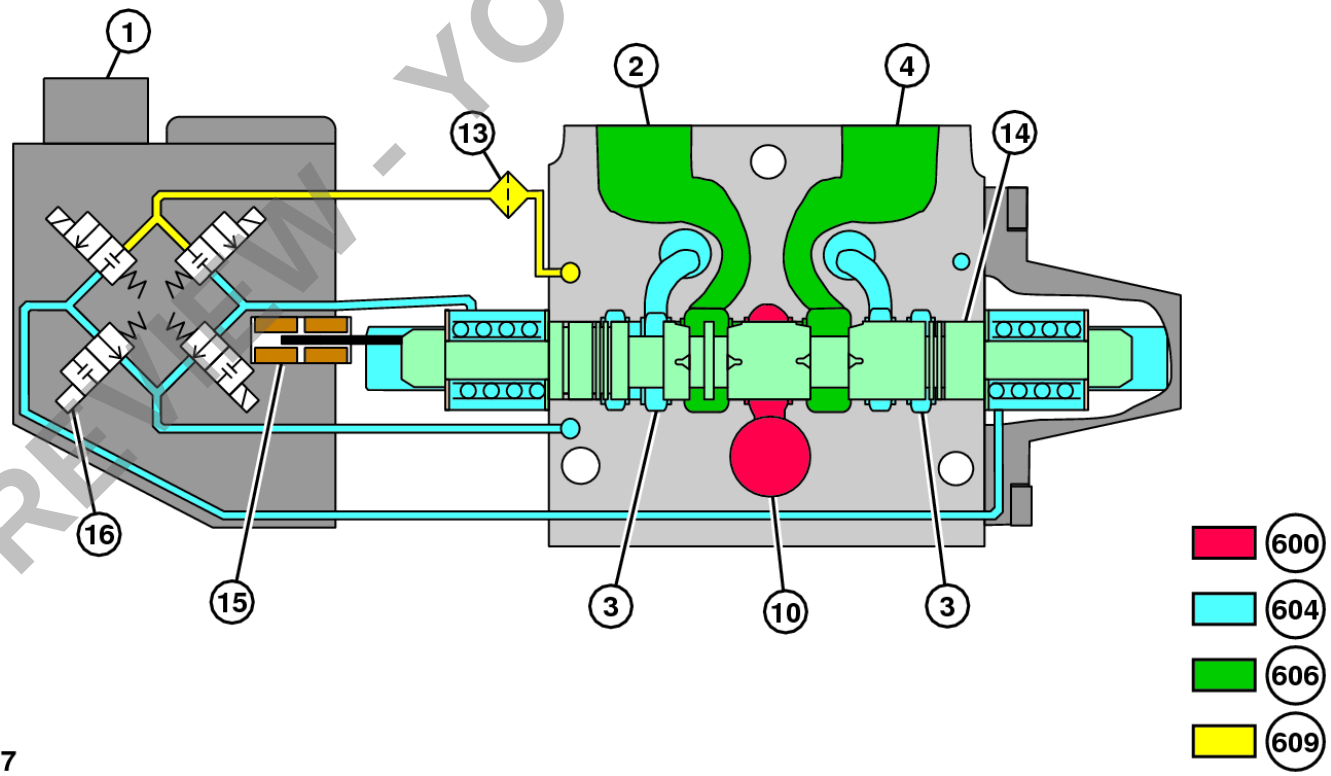


TX1045837

*Joystick Steering Valve Cross Section*

PREVIEW - YOUFIXTHIS.COM


Download full manual at youfixthis.com

## Result:

**YES:**Go to Loader Control Valve Check.

**NO:**Repair or replace pilot control valve.

**( 6 ) Loader Control Valve Check**

## Action:

Check loader control valve. See Loader Control Valve Disassemble and Assemble . (Group 3160.)

Is loader control valve worn or damaged?

## Result:

**YES:**Repair or replace loader control valve.

**NO:**Checks complete.

PREVIEW - YOUFIXTHIS.COM



Download full manual at youfixthis.com

**[6] -** Perform hydraulic oil warmup procedure. See Hydraulic Oil Warmup Procedure . (Group 9025-25.) Steer machine back and forth to ensure steering cylinders contain heated oil.

| Item | Measurement | Specification |
|---|---|---|
| Hydraulic Oil | Temperature | 60—70°C |
| | | 140—160°F |

**[7] -** Remove and store frame articulation lock bar.

**[8] -** Operate engine at specification.

| Item | Measurement | Specification |
|---|---|---|
| Engine | Speed | Slow Idle |

**[9] -** Align machine so bucket corner of the same side of machine as the instrumented steering cylinder is against an immovable object.

**[10] -**

**LEGEND:**
3 Pre-Test Distance

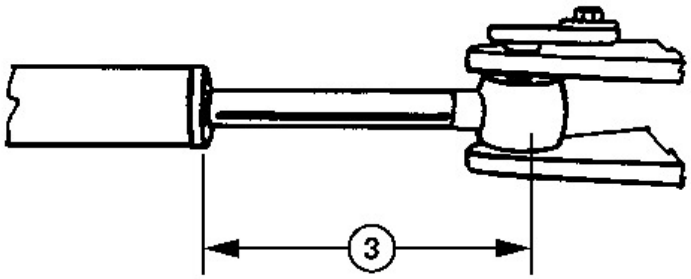


***Rod End of Cylinder to Rod End Pin Center***

Adjust steering angle so instrumented steering cylinder is at pre-test distance (3).

| Item | Measurement | Specification |
|---|---|---|
| Pre-Test | Distance | 254 mm |
| | | 10 in. |

**[11] -** Display stopwatch mode on advanced display unit (ADU). See Display Unit—Main Menu—Settings—Stopwatch . (Operator's Manual.)

**[12] -**

**→NOTE:**

**Hands must be off the steering wheel while performing this test.**

Put machine in 2nd gear forward and apply power to maintain specified pressure reading for 1 minute.

| Item | Measurement | Specification |
|---|---|---|
| Steering Drift Test | Pressure | 6895 kPa |
| | | 69 bar |
| | | 1000 psi |

**[13] -** Measure distance and subtract from pre-test distance (3) to determine steering cylinder drift. Compare to specification.

| Item | Measurement | Specification |
|---|---|---|
| Steering Cylinder | Drift (maximum) | 64 mm/min. |
| | | 2.5 in./min. |

a. If drift is less than specification, steering drift is normal.
b. If drift is more than specification, see Boom, Bucket, and Steering Cylinder Leakage Test . (Group 9025-25.)
c. If steering cylinder leakage is at specification, see Orbital Steering Valve Leakage Test . (Group 9025-25.)

PREVIEW - YOUFIXTHIS.COM


Download full manual at youfixthis.com

# PREVIEW ONLY

You're viewing 25 of 1516 pages

## The full manual includes:

- All 1516 pages, complete
- Searchable PDF (find any keyword)
- No watermarks
- Instant download
- Print-ready quality

**GET FULL MANUAL NOW**

**John Deere 744K Operation and Test Manual**

**Scan or click anywhere**
**youfixthis.com**

*Click anywhere on this page to get the full manual*