PREVIEW - YOUFIXTHIS.COM

Download full manual at youfixthis.com

Glossary of Terms

PREVIEW - YOUFIXTHIS.COM

Download full manual at youfixthis.com

[1] - Park tractor, turn ignition key to OFF, and allow radiator to cool.

IMPORTANT:

Leave temperature knob (B) set to the highest setting throughout the procedure. System does not drain if temperature knob is not set to highest setting or ignition key is not turned to Run.

[2] - Turn key to RUN (A) and turn temperature knob (B) to highest setting.

[3] - Open hood and remove deaeration tank cap (C).

[4] -

→NOTE:

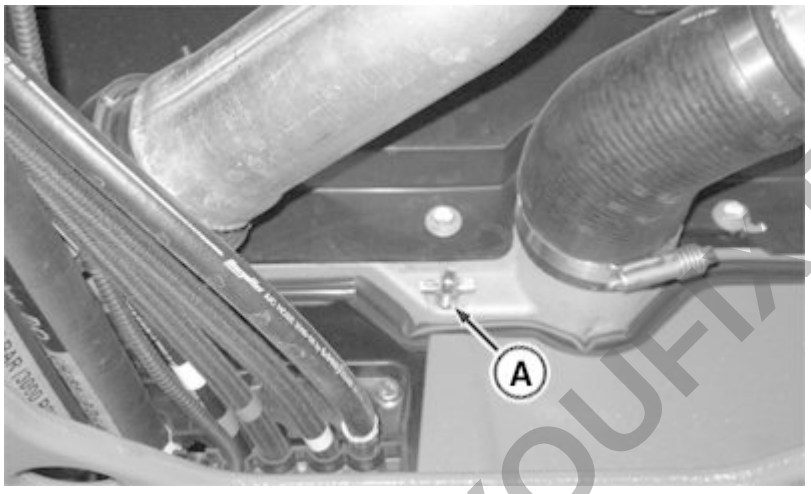

Radiator Drain Valve

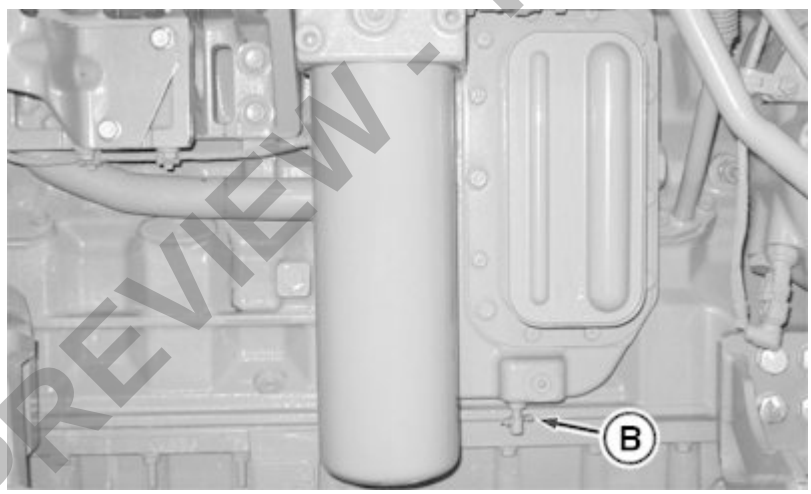

Engine Drain Valve

PREVIEW - YOUFIXTHIS.COM

Download full manual at youfixthis.com

Repair Vari-Cool™ Fan Driven Assembly—9.0 L Engine

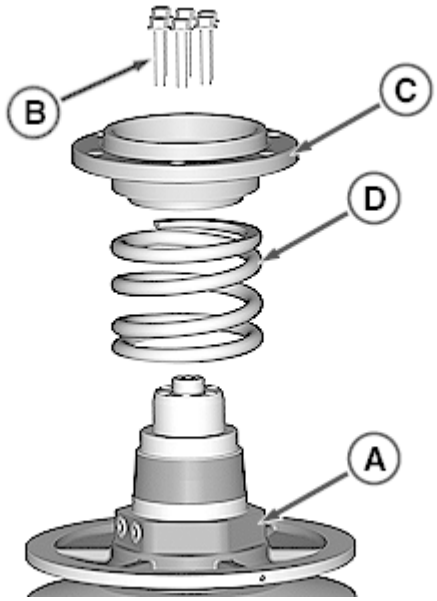

LEGEND:

A	Hex of Driven Sheave
B	Cap Screw (6 used)
C	Fan Drive Hub
D	Spring

[1] - Remove fan driven assembly. (See Remove and Install Vari-Cool™ Fan Driven Assembly—9.0 L Engine in this group.)

[2] - Hold hex of driven sheave (A) and remove cap screws (B).

[3] - Remove fan drive hub (C) spring (D).

[4] -

IMPORTANT:

If bearings are removed from shaft, do not reuse.

PREVIEW - YOUFIXTHIS.COM

Download full manual at youfixthis.com

Section 40 - ELECTRICAL

Table of contents

Group 05 - Connectors 1
List of References 1
Essential, Recommended, and Fabricated Tools 3
Other Material 4
Use Electrical Insulating Compound 4
Using High-Pressure Washers 4
Repair AMP Connector 5
Repair AMPSEAL 16™ Connectors 8
CAN Controlled SCV Connectors 14
Remove Connector Body from Blade Terminals 16
CINCH™ Wedgebox Connectors 18
Exploded View—CINCH™ Flexbox Connectors 26
CINCH™ Flexbox Connectors 28
Repair CPC™ Blade Type Connectors 33
Repair CPC™, Large MATE-N-LOC™, and METRIMATE™ Pin Type Connectors 35
Repair DEUTSCH™ Connectors 37
Repair DEUTSCH™ Implement Connectors 41
Repair ITT Connector 44
Repair Small MATE-N-LOC™ Socket Connector 48
Repair Small MATE-N-LOC™ Pin Connector 49
Repair (Pull Type) METRI-PACK™ Connectors 50
Repair (Push Type) METRI-PACK™ Connectors 52
Repair Molex™ Control Unit Connectors 55
Repair Molex Connector 62
Repair SUMITOMO™ Connectors 65
Repair Tyco Fuel Injector Connector 68
Repair Weather Pack™ Connector 70
Repair YAZAKI™ Connectors 72
Group 10 - Wiring Harness Routings 75
List of References 75
Convenience Outlet #2 Harness (Eur Only) 78
Convenience Outlet #2 Harness (NA Only) 79
Convenience Outlet #1 Harness (Eur Only) 80
Convenience Outlet #1 Harness (NA Only) 81
Roof Control Unit Power Cable 82
Cab Control Unit Power Cable 83
9.0L Alternator Power Cable 84
13L Alternator Power Cable 84
Positive Battery Cable 85
Negative Battery Cable 86
Cab Power Cable 86
Cab Ground Cable 87
Rear Chassis Control Unit Power Cable 88
Battery Disconnect Switch Cable 88
Auxiliary Power Strip 89
Power Module Relay Harness (Eur Only) 89

PREVIEW - YOUFIXTHIS.COM

Download full manual at youfixthis.com

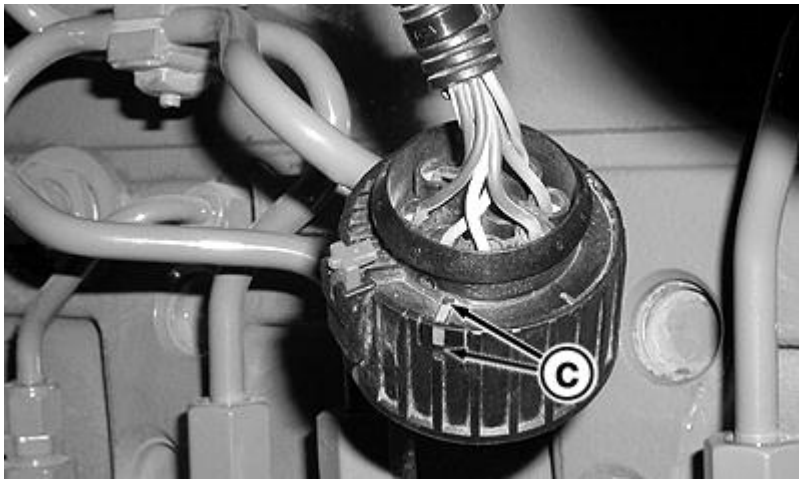

LEGEND:

A	Inner Part
B	Outer Part
C	Green Marks

Install connector to engine: Grasp inner part (A) of connector.

[4] - Rotate outer part (B) of connector counterclockwise until green marks (C) are aligned.

[5] - Install connector on engine with green marks (C) at approximately the seven o′clock position.

[6] -

→NOTE:

Green marks will no longer be aligned.

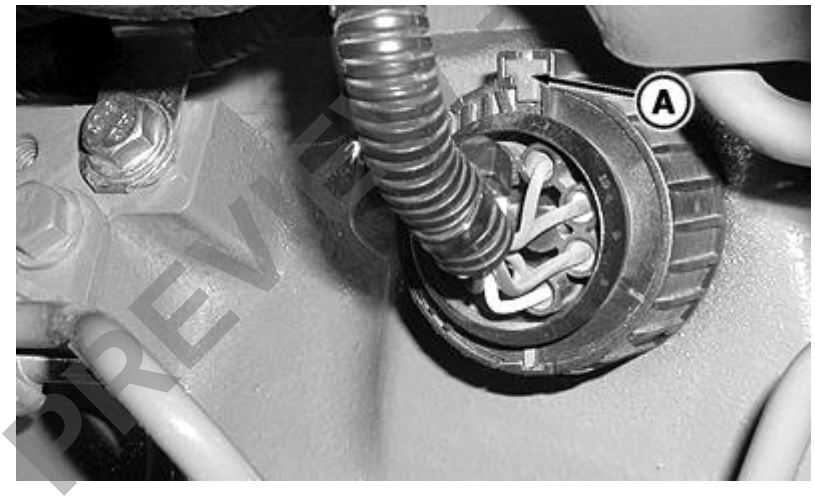

LEGEND:

A	Locking Tab

Rotate outer part of connector clockwise until locking tab (A) is at 12 o′clock position.

[7] - Push in locking tab (A).

PREVIEW - YOUFIXTHIS.COM

Download full manual at youfixthis.com

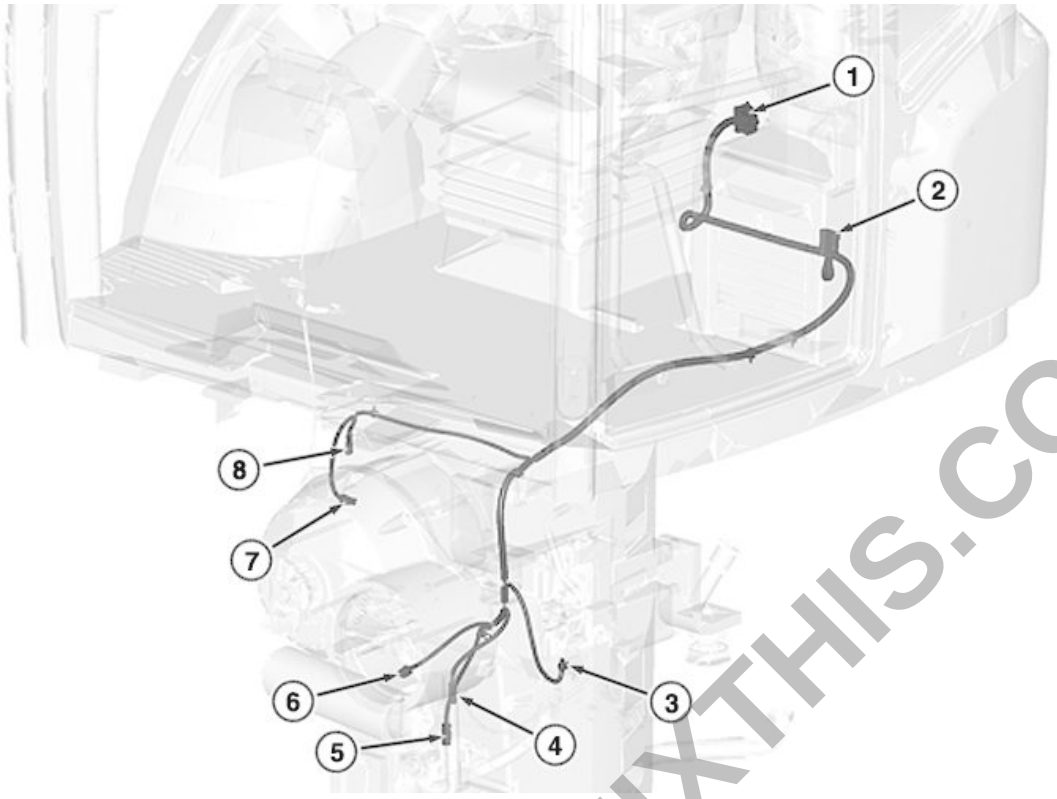

LEGEND:

1 Rear Chassis Control Unit Connector
2 Chassis to Transmission Harness Interconnect
3 Transmission Oil Pressure Sensor
4 Transmission Oil Filter Restriction Switch
5 Transmission Primary Speed Sensor (MST Only)
6 MST HI/LO Solenoid
7 Neutral Start Switch (MST Only)
8 Reverse Detect Switch

PREVIEW - YOUFIXTHIS.COM

Download full manual at youfixthis.com

Replace Differential Lock Switch

[1] -

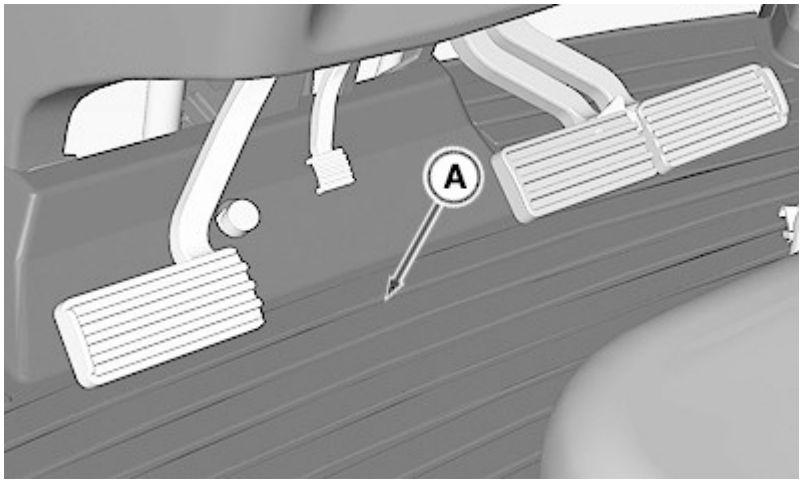

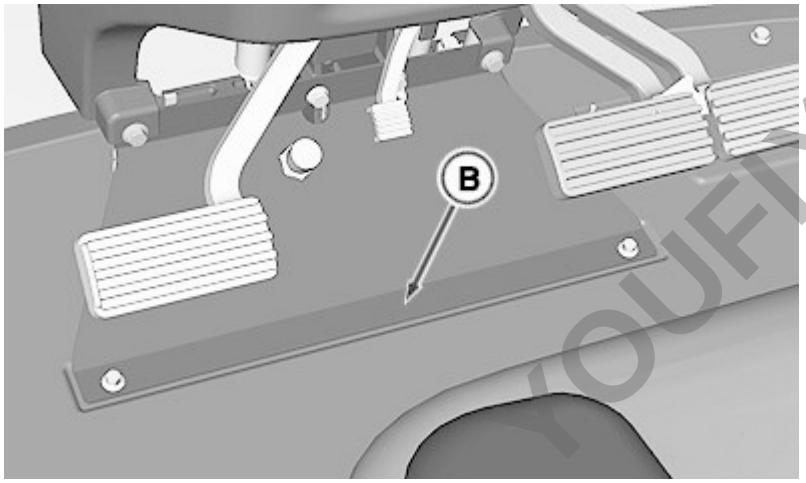

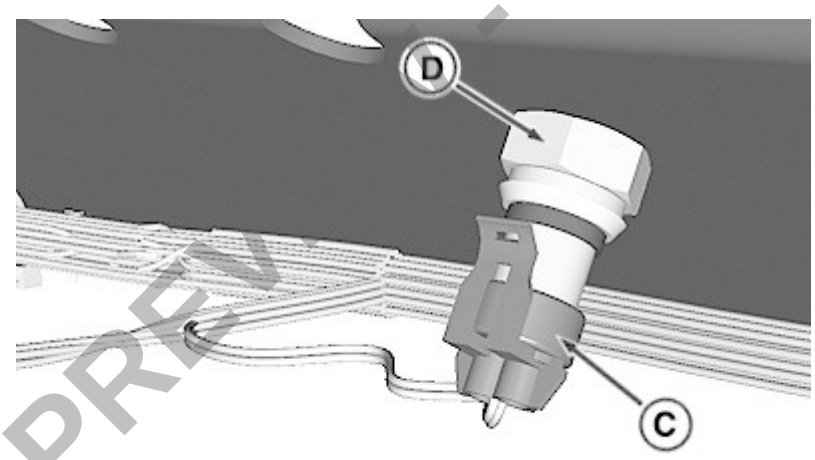

LEGEND:

A	Floor Mat
B	Floor Plate
C	Wiring Harness Connector
D	Switch

Remove floor mat (A).

[2] - Remove floor plate (B).

PREVIEW - YOUFIXTHIS.COM

Download full manual at youfixthis.com

Replace Auxiliary Power Strip

[1] -

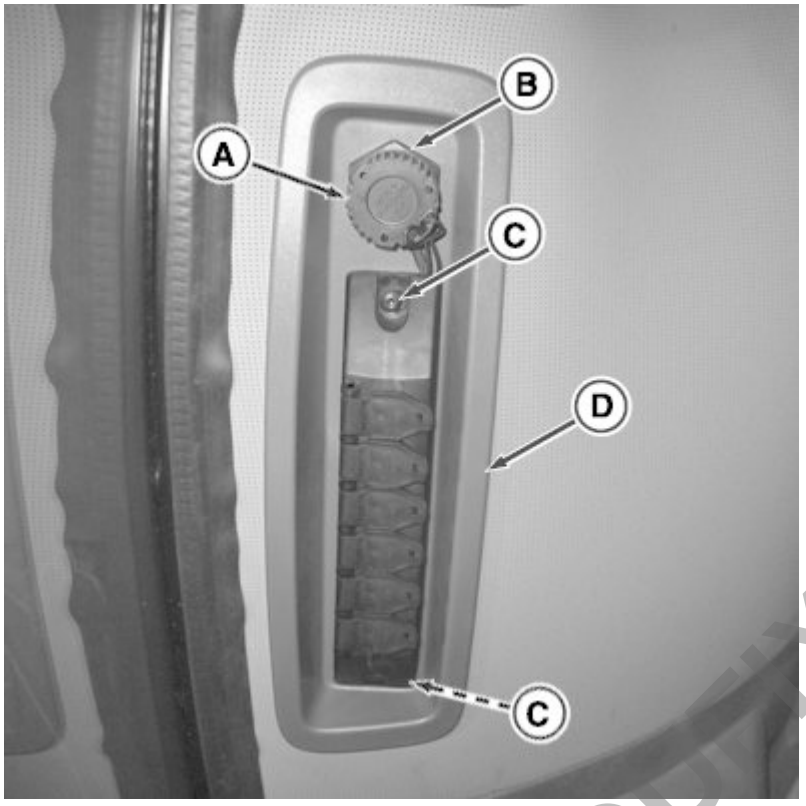

LEGEND:

A	Dust Cap
B	Retaining Nut
C	Screws
D	Mounting Plate

Disconnect battery ground (-) at battery.

[2] - Remove dust cap (A), retaining nut (B), and screws (C).

[3] - Remove mounting plate (D).

[4] -

→NOTE:

Pin (A) provides battery power, pin (B) provides switched power, and pin (C) is ground.

PREVIEW - YOUFIXTHIS.COM

Download full manual at youfixthis.com

[8] -

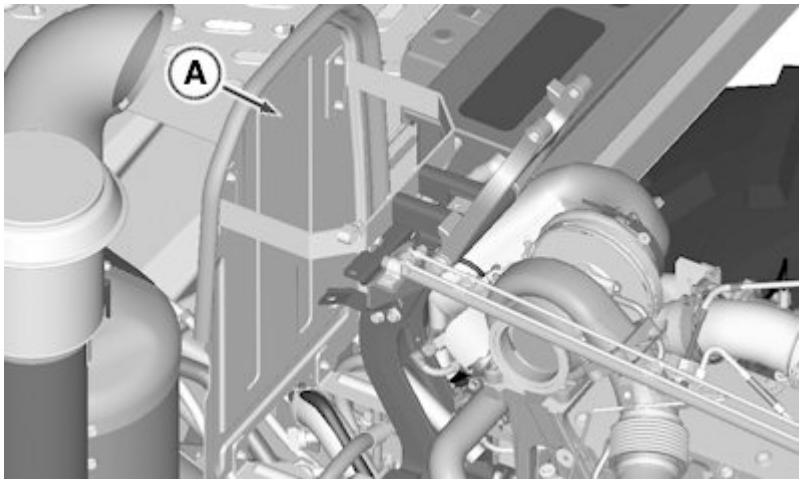

LEGEND:

A	Heat Shield

Remove heat shield (A).

[9] -

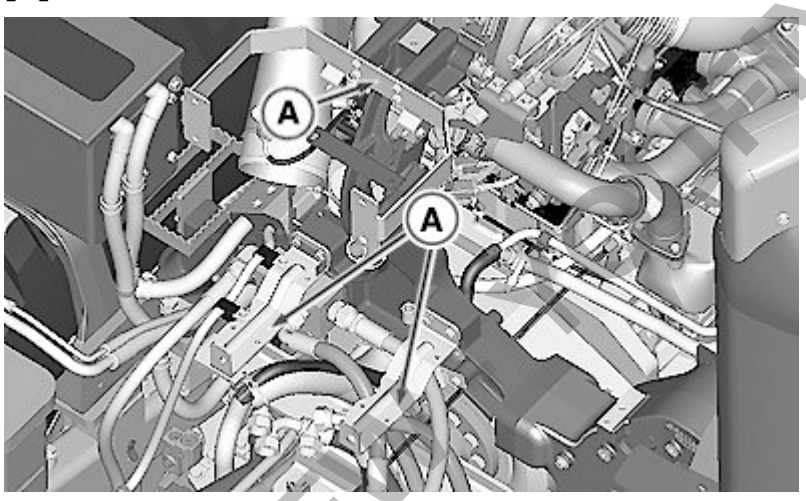

LEGEND:

A	Heat Shield Brackets (3 used)

Remove heat shield brackets (A).

PREVIEW ONLY YOUFIXTHIS.COM

Download full manual at youfixthis.com

[6] -

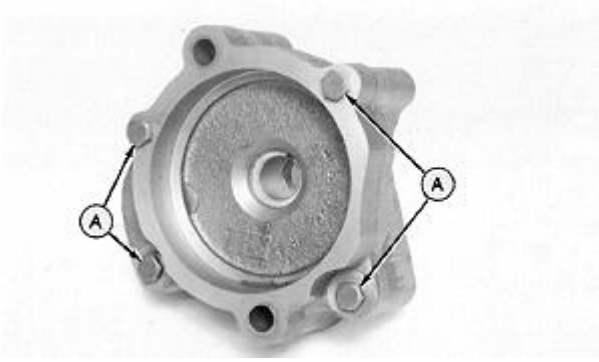

LEGEND:

A	Cap Screws

Assemble pump gears and housings and tighten cap screws (A).

Item	Measurement	Specification
Manifold-to-Pump Body Cap Screw	Torque	25 N·m (221 lb.-in.)

PREVIEW - YOUFIXTHIS.COM

Download full manual at youfixthis.com

Install Traction Clutch Assembly

[1] -

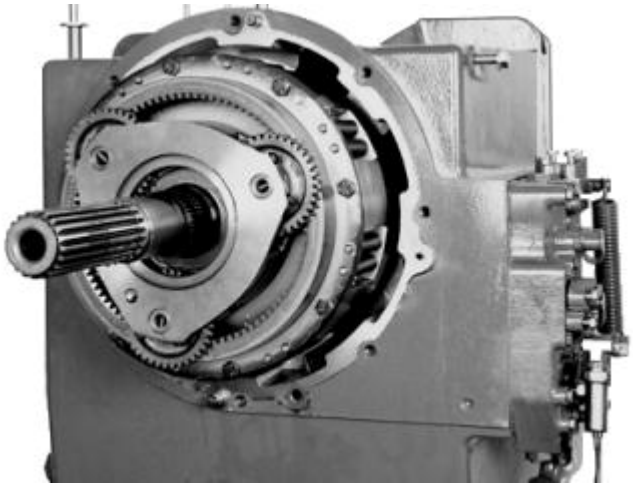

Lubricate sealing rings on traction clutch manifold with clean hydraulic oil.

[2] -

> ***CAUTION:***
>
> ***Traction clutch assembly is heavy. Use proper lifting equipment to prevent injury.***

Carefully install clutch onto transmission drive shaft, using a hoist and chain or strap so sealing rings on manifold are not damaged.

[3] - Install Hi-Lo planetary. (See Install Hi-Lo Planetary Assembly in Group 30.)

[4] -

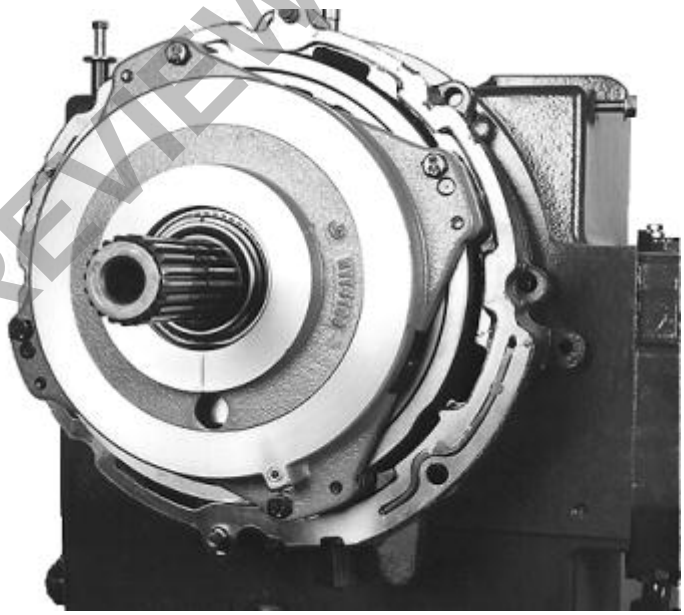

Install clutch and brake pack. (See Install Hi-Lo Clutch and Brake Assembly in Group 25.)

[5] - Install spacer housing. (See Remove, Inspect, and Install Spacer Housing and Parts in Group 35.)

PREVIEW - YOUFIXTHIS.COM

Download full manual at youfixthis.com

[31] - Install cap screws (A).

[32] - Install shift lever control assembly. (See Remove and Install Shift Lever Control Assembly in this group.)

PREVIEW - YOUFIXTHIS.COM

Download full manual at youfixthis.com

LEGEND:

A	Yoke
B	Yoke Retaining Cap Screw
C	Washer
D	Oil Ring
E	Input Shaft Oil Seal
F	Spacer Washer
G	Input Gear
H	Upper Idler Gear
I	Lower Idler Gear
J	Output Shaft
K	Front Housing Cover
L	Rear Housing Cover
M	Rear Oil Seal
N	Bearing Cup
O	Bearing Cone

PREVIEW - YOUFIXTHIS.COM

Download full manual at youfixthis.com

Install new bearing cup (A) in differential housing using JDG933 Driver Disk (137 mm or 5-3/8 in.) .

[18] - Install new bearing cup (B) in cover using JDG932 Driver Disk (162 mm or 6-3/8 in.) .

[19] -

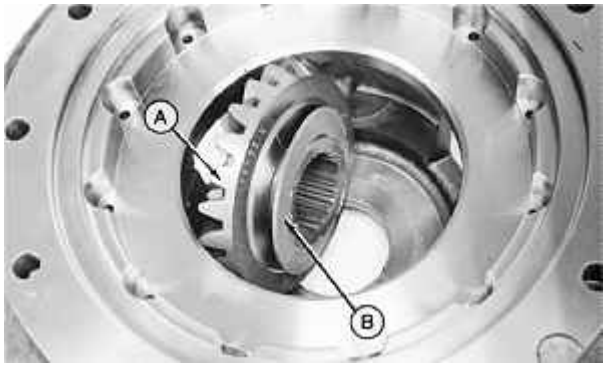

LEGEND:

A	Bevel Gear
B	Thrust Washer

Install bevel gear (A) and thrust washer (B) into housing.

PREVIEW - YOUFIXTHIS.COM

Download full manual at youfixthis.com

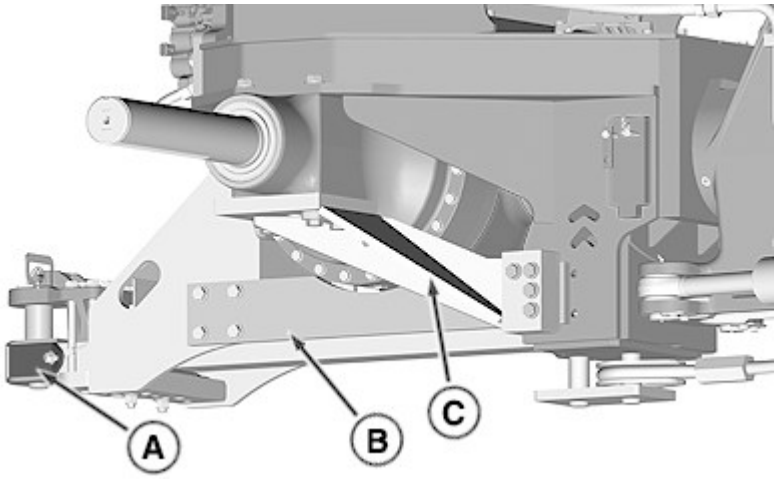

LEGEND:

A	Drawbar
B	Hitch Supports Links
C	Axle Supports

Install hitch support links (B).

[24] - Install axle supports (C) (if equipped).

Item	Measurement	Specification
Hitch Plate-to-Tractor Frame Cap Screws	Torque	610 N·m (450 lb.-ft.)

Item	Measurement	Specification
Stabilizer Links or Draft Link Support Cap Screws	Torque	620 N·m (460 lb.-ft.)

Item	Measurement	Specification
Axle Support-to-Tractor Frame Cap Screws	Torque	624 N·m (460 lb.-ft.)
Axle Support-to-Axle	Torque	1050 N·m (775 lb.-ft.)

[25] - Install drawbar (A).

[26] - Refill and check oil level. (See Operator's Manual for refilling and oil checking procedures.)

[27] -

CAUTION:

Prevent personal injury. Never operate tractor with a loose rim, wheel, hub, or axle.

IMPORTANT:

Keep the outer face of the axle sleeve flanges even as the bolts are tightened. Hub breakage or bolt loosening may occur if sleeves are not tightened evenly.

Download full manual at youfixthis.com
PREVIEW - YOUFIXTHIS.COM

Disassemble, Inspect, and Assemble Axle Shaft

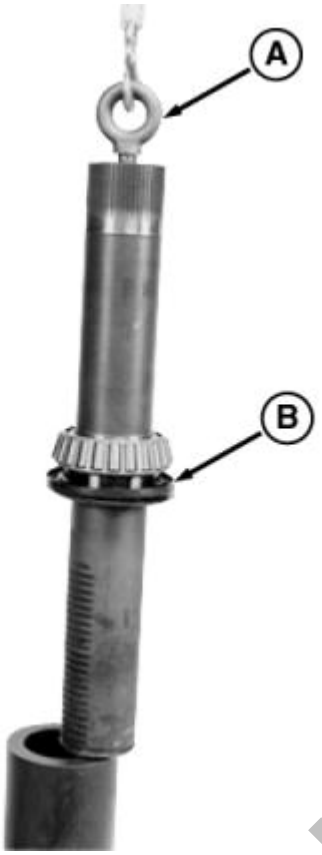

LEGEND:

A	Lift Eye
B	Outer Seal

[1] - Install JT05508 Lift Eye (A), raise axle shaft from support stand, and remove outer seal (B).

[2] - Inspect axle shaft.

[3] - Inspect inner bearing cone adjoining shaft surface.

PREVIEW - YOUFIXTHIS.COM

Download full manual at youfixthis.com

Group 15 - Steering Cylinders

List of References

Below is a list of all items within this group.

Other Material

Specifications

Remove and Install Steering Cylinders

Repair Steering Cylinder

Other Material

Number	Name	Use
• PM37477 (us) • PM38622 (canadian) • 242 LOCTITE™ (loctite)	Thread Lock and Sealer (Medium Strength)	Used to retain cap screws.

Specifications

Item	Measurement	Specification
Steering Cylinder Bushing-to-Pin	Play (maximum)	1.5 mm (0.06 in.)
Steering Cylinder Retaining Cap Screws	Torque	125 N·m (92 lb.-ft.)

PREVIEW - YOUFIXTHIS.COM

Download full manual at youfixthis.com

[6] -

IMPORTANT:

Flush reservoir if there was a hydraulic component failure.

Clean reservoir of any debris.

[7] - Install in reverse order.

[8] - Tighten to specification.

Item	Measurement	Specification
Reservoir Retaining Cap Screw	Torque	90 N·m (66 lb.-ft.)
Reservoir Retaining Nuts	Torque	50 N·m (37 lb.-ft.)

[9] - Fill hydraulic reservoir. (See Drain and Fill Hydraulic Reservoir in this group.)

[10] -

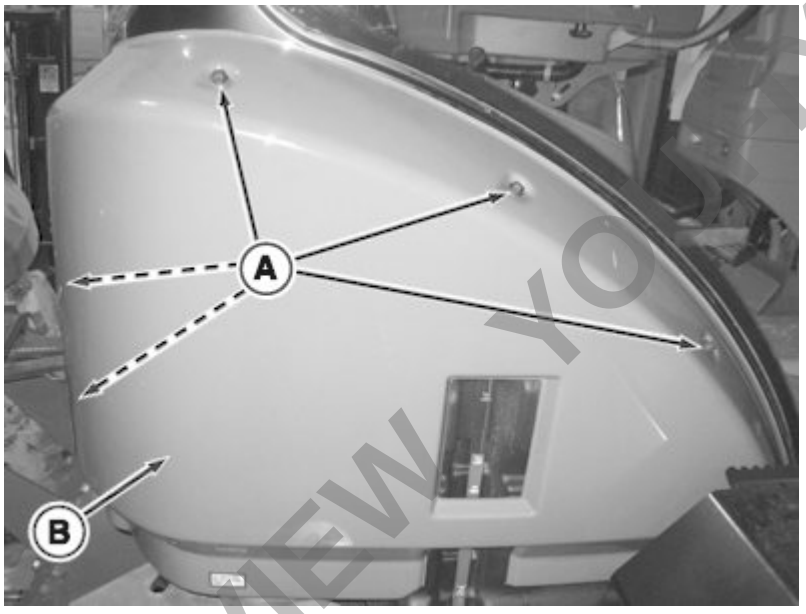

LEGEND:

A	Cap Screws (5 used)
B	Side Panel

Install cap screws (A) and side panel (B).

[11] - Tighten to specification.

Item	Measurement	Specification
Side Panel Cap Screws	Torque	35 N·m (26 lb.-ft.)

PREVIEW YOUFIXTHIS.COM

Download full manual at youfixthis.com

Service Pressure Compensator

[1] -

CAUTION:

Use caution when removing plug, 300 N (70 lb.) force needed on back side of plug.

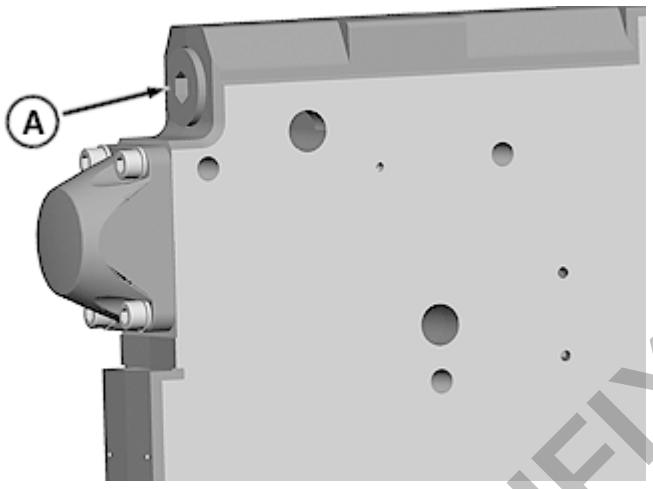

Remove plug (A).

[2] -

→NOTE:

JDG10666 Pressure Compensator Removal Brush (C) may be used to remove spool if needed.

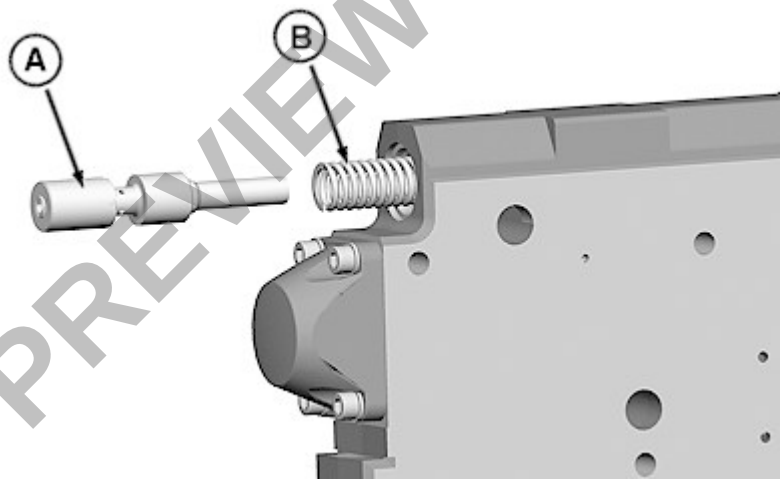

PREVIEW - YOUFIXTHIS.COM

Download full manual at youfixthis.com

Adjusting and Tightening Wheels—Standard Cast Drive Wheel and Dual Hubs

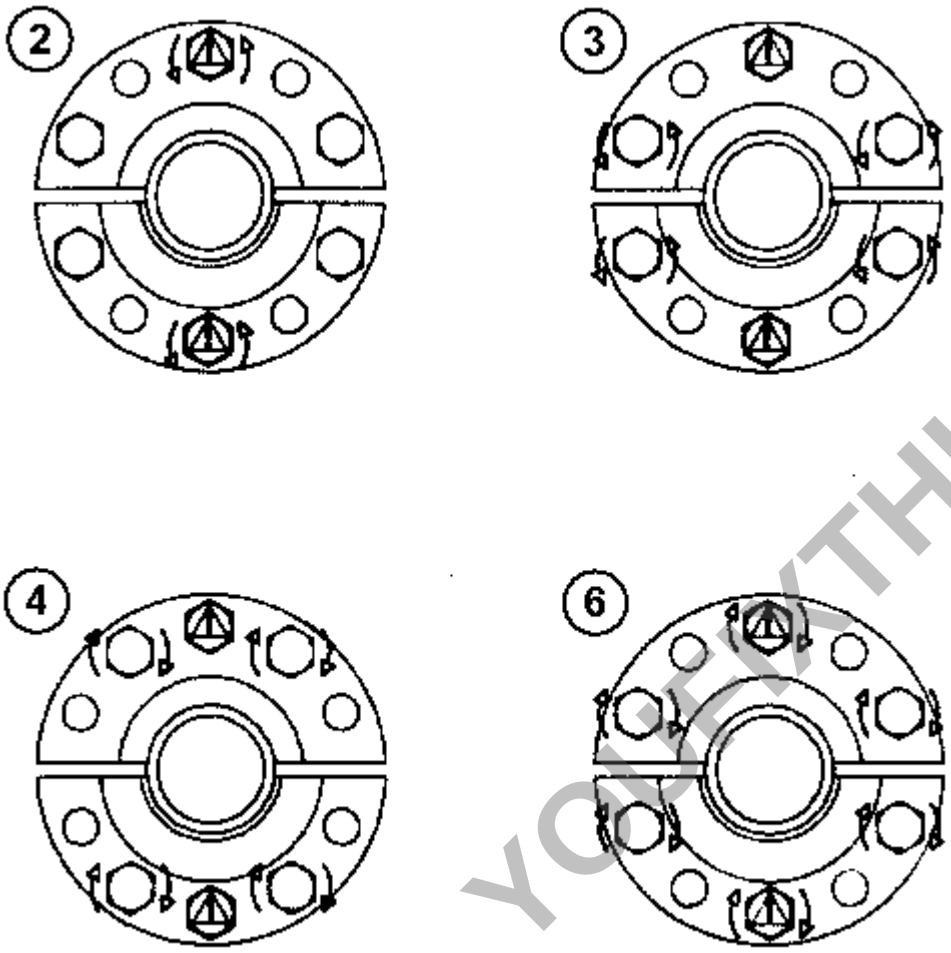

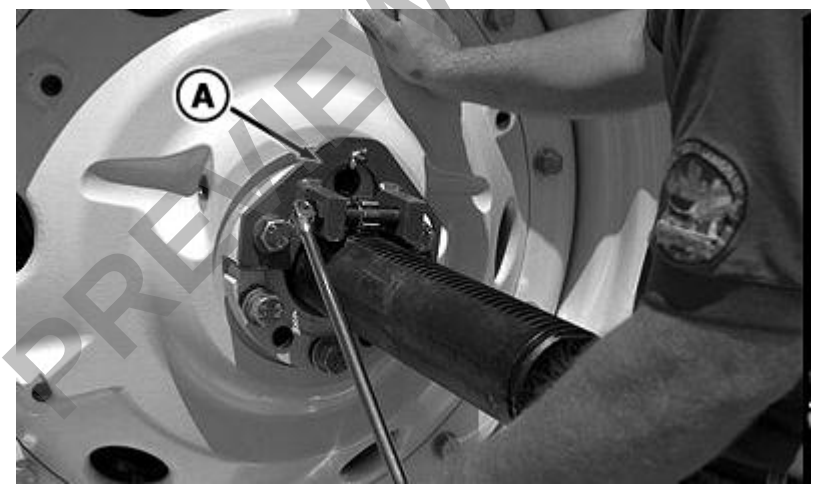

LEGEND:

A	Wheel Adjusting Tool

PREVIEW - YOUFIXTHIS.COM

Download full manual at youfixthis.com

[12] -

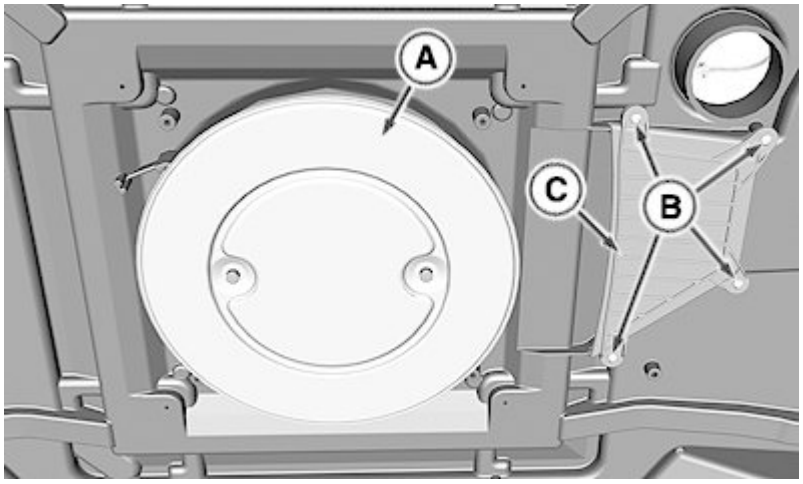

LEGEND:

A	Cab Recirculation Filter
B	Screws (4 used)
C	Cover

Install cab recirculation filter (A), cover (C), and screws (B).

[13] -

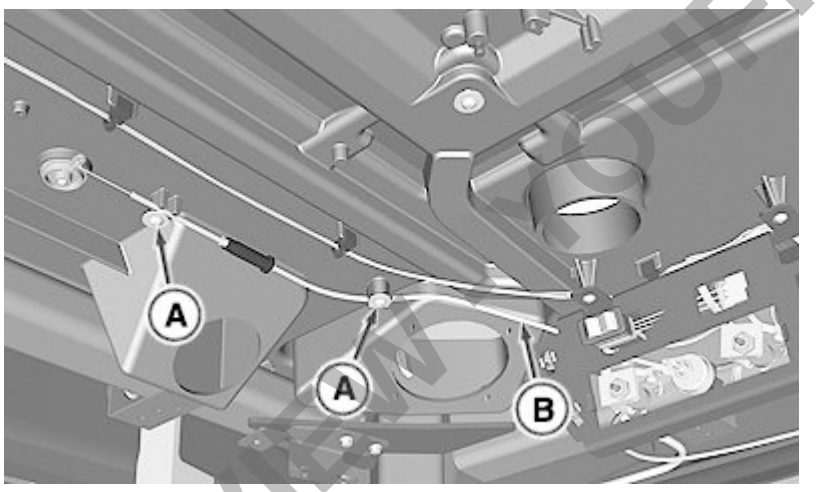

LEGEND:

A	Cable Retainers (2 used)
B	Mode Control Cable

For tractors not equipped with Automatic Temperature Control (ATC), perform the following:

- Install mode control cable (B) and cable retainers (A).

[14] -

PREVIEW YOUFIXTHIS.COM

Download full manual at youfixthis.com

Purging Air from ActiveSeat™ System

IMPORTANT:

Air must be purged from ActiveSeat™ hydraulics any time system is opened for service.

→NOTE:

The tractor must be running, stationary, and seat firmness switch in CENTER position.

[1] -

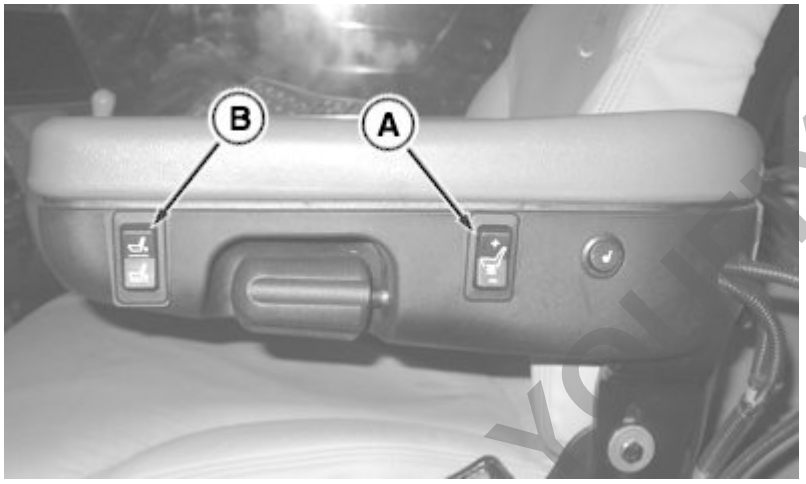

Left-Hand Armrest

LEGEND:

A	ActiveSeat™ Firmness Control Switch
B	ActiveSeat™ Height Control Switch

Position firmness switch (A) in**CENTER** position.

→NOTE:

Switch must be in CENTER position to start test or test deactivates.

[2] - Lower seat to lowest position using height control switch (B).

[3] - Access ASU address 071.

[4] - Cycle warning light switch**once** .

→NOTE:

Test must be started within 1 minute after cycling warning light switch or test deactivates.

PREVIEW - YOUFIXTHIS.COM

Download full manual at youfixthis.com

Section 95 - HINGE AND GUDGEON

Table of contents

Group 05 - Hinge 1
List of References 1
Essential, Recommended, and Fabricated Tools 1
Other Material 1
Specifications 2
Replace Hinge Pins and Bushings 3
Group 10 - Gudgeon 14
List of References 14
Essential, Recommended, and Fabricated Tools 15
Other Material 15
Specifications 15
Exploded View—Standard Gudgeon 16
Exploded View—Severe Duty Gudgeon 18
Remove Gudgeon Drive Shaft 20
Inspect Universal Joint and Gudgeon Drive Shaft 21
Install Gudgeon Drive Shaft 22
Replace Gudgeon Journal Bearings, Thrust Bearings, and Wear Plates—Standard Duty Gudgeon 24
Replace Gudgeon Journal Bearings, Thrust Bearings, and Wear Plates—Severe Duty Gudgeon 39
Replace Gudgeon Spindle 51

PREVIEW - YOUFIXTHIS.COM

Download full manual at youfixthis.com

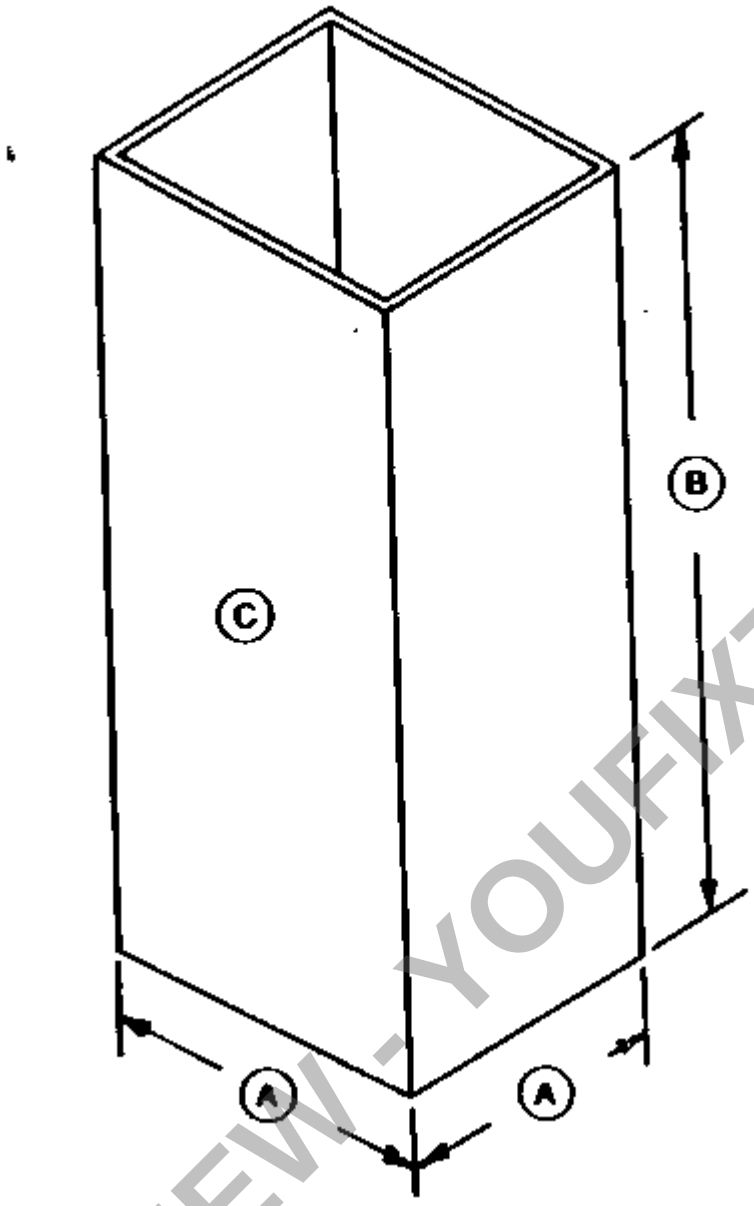

LEGEND:

A	305 mm (12 in.)
B	711 mm (28 in.)
C	Use 13 or 19 mm (1/2 or 3/4 in.) Plywood

Box is used to pack dry ice around and inside the gudgeon spindle in order to install into rear frame.

DFRW92—Mounting Guide Pins

→NOTE:

Tool may be purchased from SERVICEGARD. Order JDG882.

PREVIEW - YOUFIXTHIS.COM

Download full manual at youfixthis.com

PREVIEW ONLY

You're viewing 25 of 1817 pages

The full manual includes:

- All 1817 pages, complete
- Searchable PDF (find any keyword)
- No watermarks
- Instant download
- Print-ready quality

GET FULL MANUAL NOW

John Deere 9360R, 9410R, 9460R, 9510R, 9560R Repair Manual

Scan or click anywhere
youfixthis.com

Click anywhere on this page to get the full manual