9540, 9560, 9580, 9640, 9660, 9680 WTS and CWS Combines Repair

TECHNICAL MANUAL
9540, 9640, 9560, 9660, 9580 and 9680 WTS and CWS Combines

TM4697 01NOV01 (ENGLISCH)

PREVIEW. YOUFIXTHIS.COM

For complete service information also see:

9540, 9560, 9580, 9640, 9660, 9680 WTS and CWS Combines Diagnosis and Tests	TM4698
Alternators and Starting Motors	CTM77
POWERTECH® 8.1 L Diesel Engines—Base Engine	CTM86
POWERTECH 4.5L & 6.8L Diesel Engines—Base Engine	CTM104
POWERTECH 4.5L & 6.8L Diesel Engines Mechanical Fuel Systems	CTM207
POWERTECH 8.1 L Diesel Engines—Mechanical Fuel Systems	CTM243
POWERTECH 4.5L & 6.8L Diesel Engines—Level 4 Electronic Fuel Systems with Bosch VP44 Pump	CTM170
POWERTECH 8.1 L Diesel Engines—Level 9 Electronic Fuel Systems with Denso In-Line Pump	CTM255

John Deere Werke Zweibrücken
European Version
Printed in Germany

Download full manual at youfixthis.com

Operating Speeds

Speeds shown are average and can vary from machine to machine. Speeds are rated at high idle with separator engaged, no load.

Continued on next page

OUO6037,000146F -19-08AUG01-1/2

PREVIEW - YOUFIXTHIS.COM

Download full manual at youfixthis.com

John Deere Engine Repair

For complete repair information, the component technical manual (CTM) is also required.

Use the component technical manual in conjunction with this manual.

Combine	Engine	Reference
9540	6068	CTM104/207
9560, 9580, 9640, 9660 and 9680	6081	CTM86/255



TS225 –UN–17JAN89

20
05
3

OUO6089,0000009 –19–11JUN01–1/1

Remove Engine

1. Disconnect negative (-) battery cable (A) from both batteries in engine compartment. Lift protective covers and remove both positive terminal clamps (B).
2. Remove all shields and brackets necessary to provide clearance for engine removal.

A—Negative Terminal Clamps
B—Positive Terminal Clamps

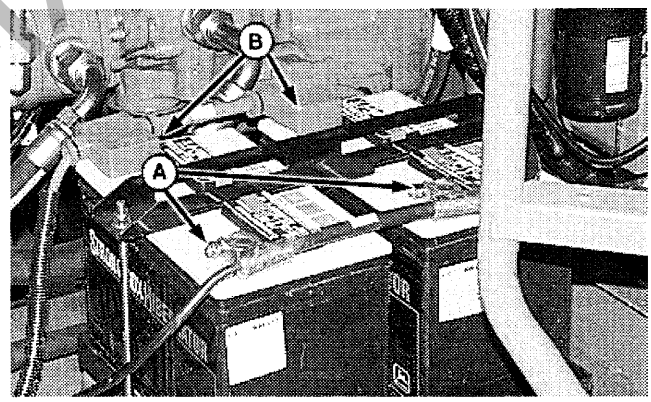

H67842 –UN–10MAY01

Batteries

Continued on next page

OUO6435,00015EE –19–25JAN02–1/15

PREVIEW - YOUFIXTHIS.COM

Download full manual at youfixthis.com

Remove and Install Turbocharger

1. Loosen clamps (A) to disconnect charge air tube (B).
2. Loosen clamp (C) to disconnect air intake hose (D).
3. Disconnect oil lines (E) and (F).
4. Remove clamp (G) to disconnect exhaust tube (I).
5. Remove four cap screws (H) and turbocharger. (See CTM86 for turbocharger repair.) Plug and cap all openings to prevent contamination from entering system.

IMPORTANT: If turbocharger failed because of foreign matter entering the air intake system, be sure to examine the system and clean as required to prevent a repeat failure.

Visually inspect the charge air cooler and clean if necessary. Oil may have accumulated from the failed turbo.

6. Prime (prelube) turbocharger rotating assembly prior to installing turbocharger on engine. Prelube center housing with clean engine oil through oil line (top opening) hole (E). Turn rotating assembly by hand to lubricate bearings.

NOTE: Two threaded guide studs may be used to hold turbocharger-to-exhaust manifold mounting surface.

7. Put new gasket on turbocharger-to-exhaust manifold mounting surface.
8. Position turbocharger against gasket in exhaust manifold.
9. Apply PT569 NEVER-SEEZ® Compound to all turbocharger mounting cap screws. Install cap screws and tighten to specification.

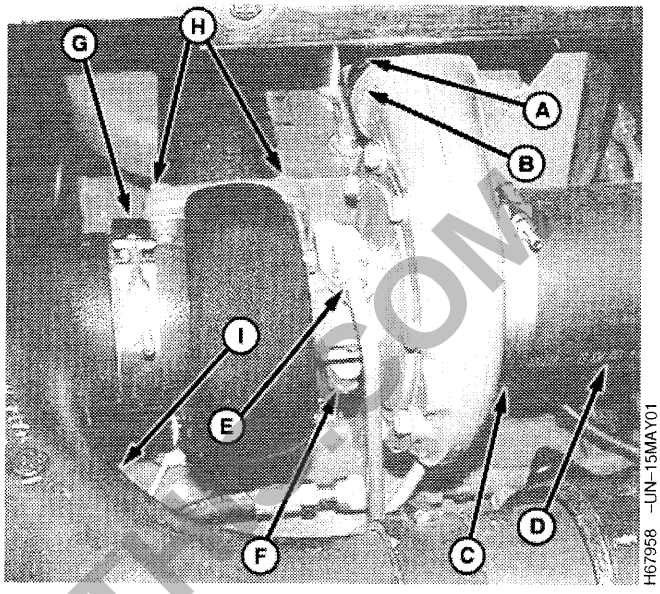

H67958 –UN–15MAY01

A—Clamp
B—Charge air tube
C—Clamp
D—Intake Hose
E—Oil Line
F—Oil Return
G—Clamp
H—Cap Screw (4 used)
I—Exhaust Tube

30 05 3

NEVER-SEEZ is a trademark of Emhart Chemical Group

Continued on next page

PREVIEW - YOUFIXTHIS.COM
Download full manual at youfixthis.com

Prevent Damage to Electrical Systems

To prevent damage to electrical system components, always observe these precautions:

1. When working on electrical systems powered from the batteries, disconnect negative (-) ground by turning handle (A) counterclockwise and removing completely from post prior to performing repair.
2. Never disconnect the batteries with the key switch on or the engine running.
3. Never connect jumper cables with the key switch on.
4. Disconnect batteries when charging them.
5. The combine should be jump started by 12 volts ONLY.
6. Always charge the batteries with a charger set for 12 volts.
7. Never connect or disconnect wiring harness connectors with the key switch on.
8. Do not apply power or ground to any component as a test, unless instructed.

A—Handle

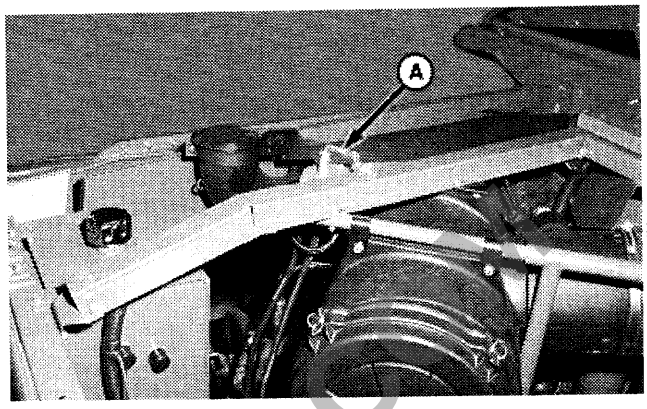

ZX25194 –UN–20JUN01

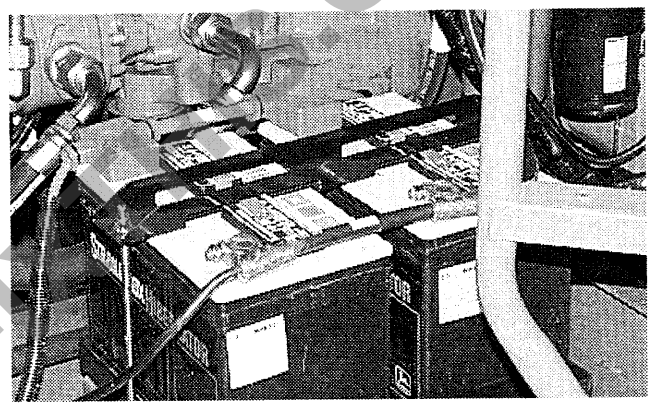

H67309 –UN–06APR01

OUO6037,000143B –19–12JUL01–1/1

PREVIEW - YOUFIXTHIS.COM

Download full manual at youfixthis.com

Instruments and Controls Identification

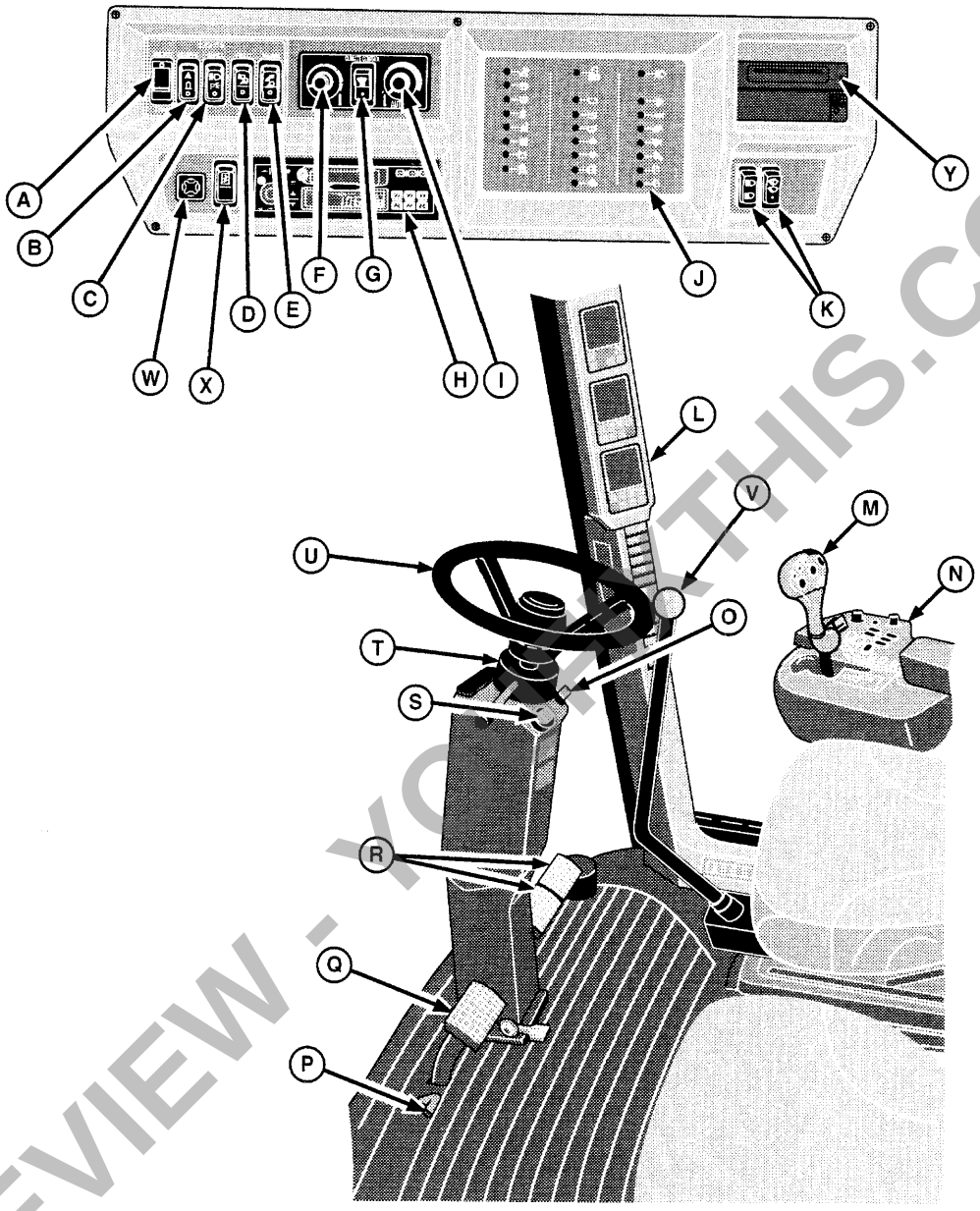

ZX25328 –UN–20SEP01

A—Light Dimmer Switch
B—Hazard Light Switch
C—Road Light Switch
D—Field Light Switch
E—Work Light Switch
F—ClimaTrak™ Temperature Control
G—ClimaTrak™ Power Switch
H—Radio
I—ClimaTrak™ Fan Control
J—Warning Display Panel
K—High Beam/Wiper Switch
L—CornerPost
M—Multi-Function Handle
N—CommandTouch™ Console
O—Horn Switch
P—Park Brake Disengage Pedal
Q—Park Brake Pedal
R—Brake Pedals
S—Starting Aid Switch
T—Turn Signal Indicators/Maximum Tilt Indicator Light (Sidehill Only)
U—Steering Wheel
V—Gearshift Lever
W—Power Mirror Switch
X—Mirror Heater Switch
Y—Printer

ClimaTrak is a trademark of Deere & Company
CommandTouch is a trademark of Deere & Company

OUO6435,00014CD –19–20SEP01–1/1

PREVIEW - YOUFIXTHIS.COM
Download full manual at youfixthis.com

3. Remove rail (A) and shifter forks (B) and (C).

CAUTION: Shifter cam compresses a heavy spring. Use caution when removing shifter cam.

4. Inspect shifter cam to be certain grooves are free of burrs and there are no flat spots. Inspect spring pins in shifter cam. Replace any that are excessively worn or burred. Also inspect mating shifting surfaces on shifter rail.

   There are no wear tolerances for any of the shifter forks or rollers (D). Replace these parts if they appear damaged or worn.

5. When replacing a roller (D) or pin, press pin flush with roller. Roller must be able to turn freely on pin. The usual cause for a roller pin to break is clash shifting.

6. Inspect all shift collars in the transmission for wear. They can cause the transmission to "jump" out of gear damaging shift forks. Incorrectly adjusted shift linkage can cause excessive wear to shift collars.

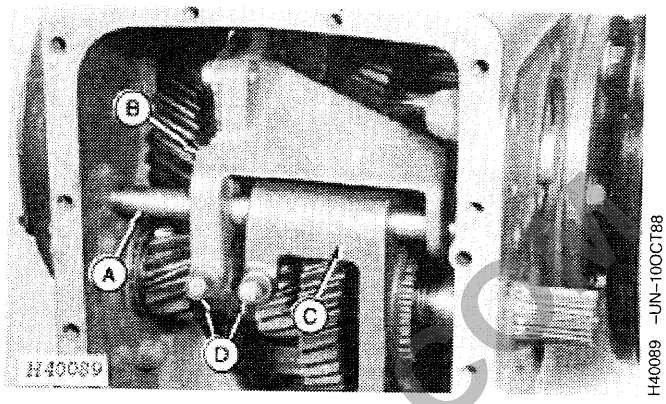

H40089 –UN–10OCT88

A—Rail
B—Shifter Fork
C—Shifter Fork
D—Roller (2 used)

AG,OUO6435,612 –19–03MAY00–3/3

50
05
4

PREVIEW - YOUFIXTHIS.COM

Download full manual at youfixthis.com

2. Install D15032NU vacuum pump on reservoir or drain reservoir.

Specification	
Hydraulic/Hydrostatic Reservoir— Approximate Capacity	34 L (36 qt)

OUO6030,000009A -19-01JUN01-2/3

3. Disconnect lines (A). Plug lines or cover with plastic bags.

CAUTION: The approximate weight of motor is 40 kg (90 lb).

Specification	
Motor—Weight	40 kg (90 lb)

4. Remove nuts (B) and pull motor away from transmission mount.

5. Repair motor as necessary.

6. Attach motor to mount with nuts (B). Tighten to specification.

Specification	
Hydrostatic Motor-to-Transmission Mount Cap Screws—Torque	115 N•m (85 lb-ft)

7. Replace O-rings in lines (A). Connect hoses to motor.

8. Check oil levels. Start engine and bleed system. (See procedure in this group.)

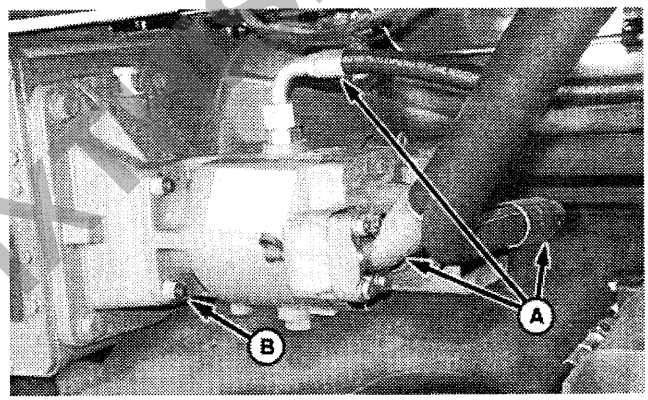

H65658 -UN-21DEC00

A—Lines
B—Nut (4 used)

OUO6030,000009A -19-01JUN01-3/3

PREVIEW - YOUFIXTHIS.COM

Download full manual at youfixthis.com

Remove Cam Lobe Motor

1. Lift unit and block rear axle. Remove rear wheel. (See procedure in group 30.)

CAUTION: Escaping fluid under pressure can penetrate the skin causing serious injury. Avoid the hazard by relieving pressure before disconnecting hydraulic or other lines. Tighten all connections before applying pressure. Search for leaks with a piece of cardboard. Protect hands and body from high pressure fluids.

If an accident occurs, see a doctor immediately. Any fluid injected into the skin must be surgically removed within a few hours or gangrene may result. Doctors unfamiliar with this type of injury may call the Deere & Company Medical Department in Moline, Illinois, or other knowledgeable medical source.

2. Fully lower header and reel to ground and continue to depress switch for 5 seconds to relieve hydraulic system pressure. Shut off engine.

3. Install D15032NU Vacuum Pump to reservoir or drain reservoir.

Specification

Hydraulic Reservoir—Capacity..... 34 L (36 qt)

4. Clean outside of cam lobe motor.

5. Disconnect wire connector (F).

6. Disconnect three hoses (D) from motor. Plug all open ports.

7. Remove slotted nut (A) from tie rod (B) and steering cylinder (C). Disconnect steering cylinder and tie rod.

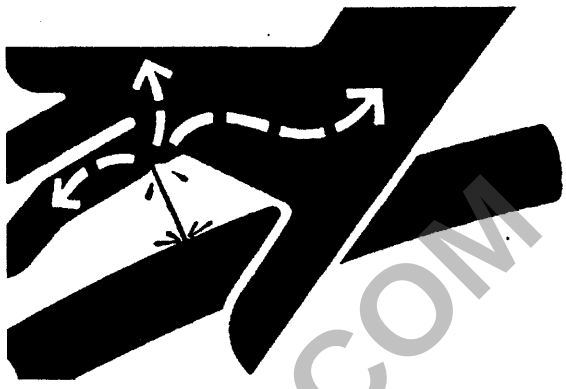

X9811 –UN–23AUG88

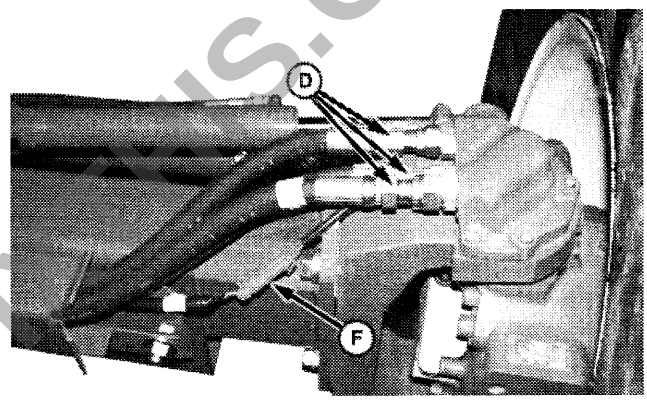

H64127 –UN–28JUN00

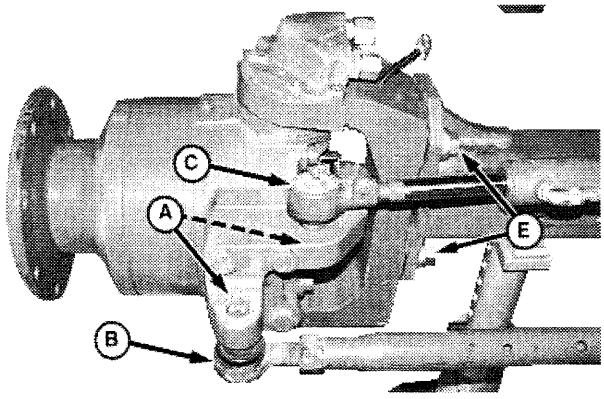

H64126 –UN–08JUN00

A—Slotted Nut (2 used)
B—Tie Rod
C—Steering Cylinder
D—Hydraulic Hose (3 used)
E—Cap Screw (4 used)
F—Wire Connector

Continued on next page

AG,OUO6435,680 –19–12JAN01–1/2

PREVIEW - YOUFIXTHIS.COM
Download full manual at youfixthis.com

Remove Steering Valve

CAUTION: Escaping fluid under pressure can penetrate the skin causing serious injury. Avoid the hazard by relieving pressure before disconnecting hydraulic or other lines. Tighten all connections before applying pressure. Search for leaks with a piece of cardboard. Protect hands and body from high pressure fluids.

If an accident occurs, see a doctor immediately. Any fluid injected into the skin must be surgically removed within a few hours or gangrene may result. Doctors unfamiliar with this type of injury may call the Deere & Company Medical Department in Moline, Illinois, or other knowledgeable medical source.



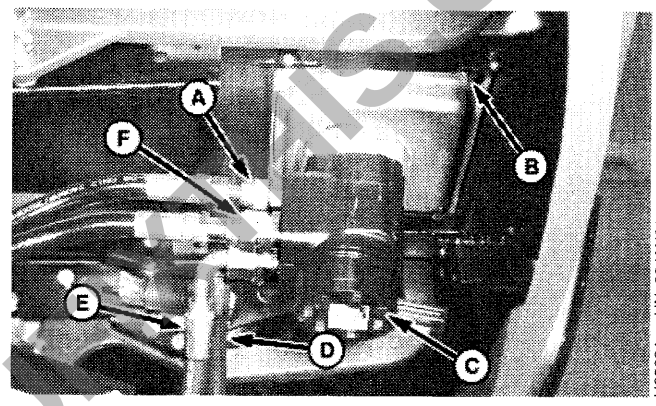

A—Oil Line-to-Steering Cylinder
B—Cap Screw (4 used)
C—Steering Valve
D—Oil Line Return-to-Filter
E—Oil Supply Line-From-Pump
F—Oil Line-to-Steering Cylinder

1. Fully lower header and reel to ground and continue to depress switch for 5 seconds to relieve hydraulic system pressure. Shut off engine.
2. Disconnect oil lines (A) and (D—F).
3. Plug and cap all openings.
4. Remove screws (B) to remove steering valve (C) and plate.

60
05
6

OUO6089,0000067 –19–09JUL01–1/2

5. Remove coupler (D).
6. Remove cap screws (B).
7. Remove support (A) from steering valve (C).

A—Support
B—Cap Screw (4 used)
C—Steering Valve
D—Coupler

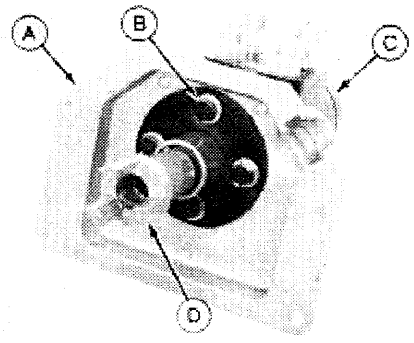

OUO6089,0000067 –19–09JUL01–2/2

PREVIEW - YOUFIXTHIS.COM

Download full manual at youfixthis.com

3. Remove drain cap (A) to drain hydraulic oil. Discard oil.

Specification

Hydraulic Reservoir—Capacity ..... 34 L (36 qt)

4. Install and tighten drain cap (A).

A—Cap

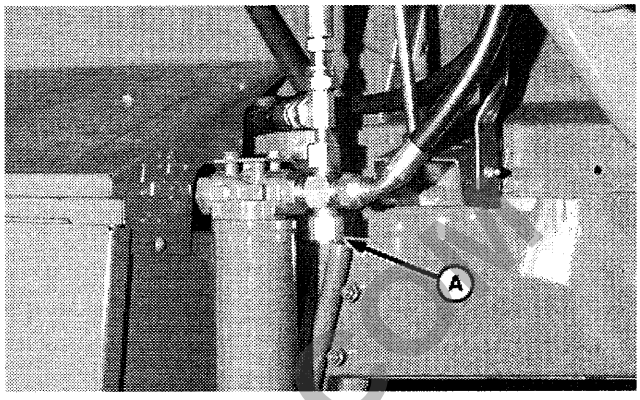

OUO6037,0001421 –19–22JUN01–2/3

5. Remove parts (B—J). Cap lines and hoses.

6. Remove hydraulic reservoir (A).

Specification

Hydraulic Reservoir—Approximate Weight ..... 18 kg (40 lb)

NOTE: Leaking may be caused by cracks in sight lens. If cracked, replace sight lens with retrofit lens assembly. Install retrofit lens assembly in reservoir using pipe sealant to avoid leaking.

7. Plug reservoir ports and pressure test at specified pressure while submerged in water. Repair leaks by soldering.

Specification

Hydraulic Reservoir Pressure Test—Pressure ..... 35 kPa (0.34 bar) (5 psi)

8. Install reservoir.

9. Install parts (B—J).

10. Fill reservoir with clean hydraulic oil. (See FUELS AND LUBRICANTS in Section 10, Group 25 for recommended oil.)

Specification

Hydraulic Reservoir—Capacity ..... 34 L (36 qt)

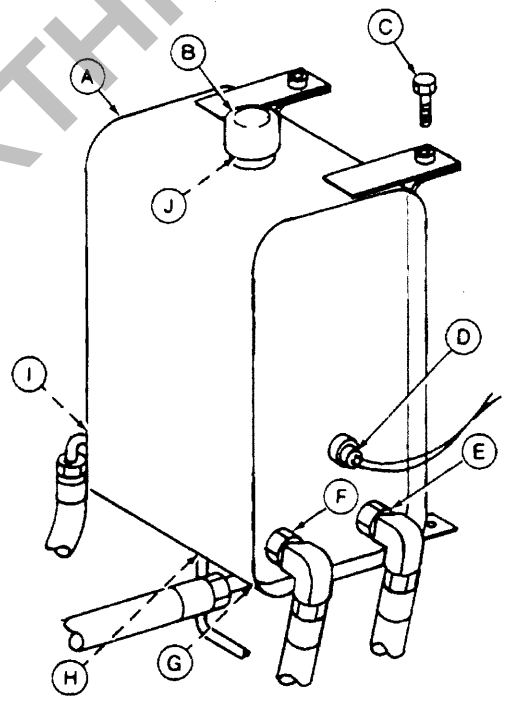

A—Hydraulic Reservoir
B—Reservoir Cap
C—Cap Screw (4 used)
D—Oil Temperature Sensor
E—Oil Line-to-Hydraulic Filter
F—Oil Line-to-Main Hydraulic Pump
G—Oil Line-from-Main Hydraulic Pump
H—Oil Line (Powered Rear Wheel Solenoid Valve Return)
I—Oil Line-to-Oil Cooler
J—Filter Screen

OUO6037,0001421 –19–22JUN01–3/3

PREVIEW - YOUFIXTHIS.COM
Download full manual at youfixthis.com

Remove and Install Gull Wing

CAUTION: Cylinder contents under pressure. Do not take apart, puncture, apply heat or fire.

1. Disconnect wiring harness (E) and remove cylinder (D) at both ends of gull wing panel.

CAUTION: Use two or more people to remove gull wing panel to prevent injury to yourself and others.

NOTE: Do not remove cap screws (B). Used for vertical adjustment only.

2. Remove cap screws (A) and nuts at both ends of gull wing panel.
3. Remove gull wing panel.
4. Repair or replace parts as necessary.
5. Position gull wing panel on hinge bracket.
6. Align holes on hinge bracket and retain using cap screws (A) and nuts at both ends. Do not fully tighten.
7. Loosen cap screws (B) at both ends of panel if required to align decals (F) and (G).
8. Tighten cap screws (A) at both ends of panel.
9. Tighten cap screws (B) at both ends of panel.
10. Attach cylinders (D) to gull wing panel and connect wiring harness connector (E).

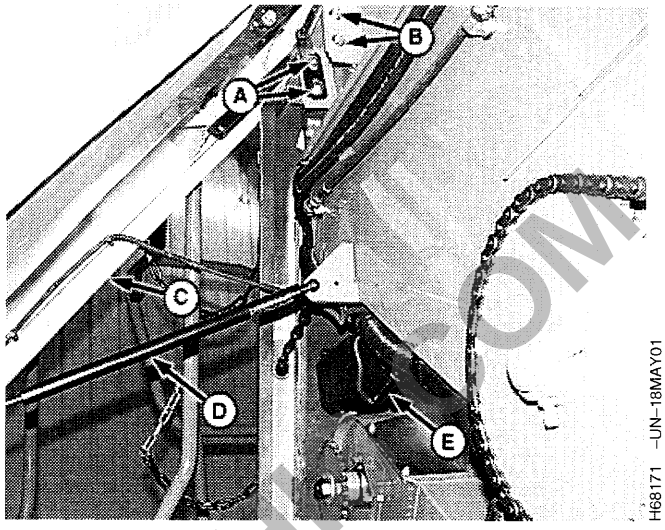

H68171 –UN–18MAY01

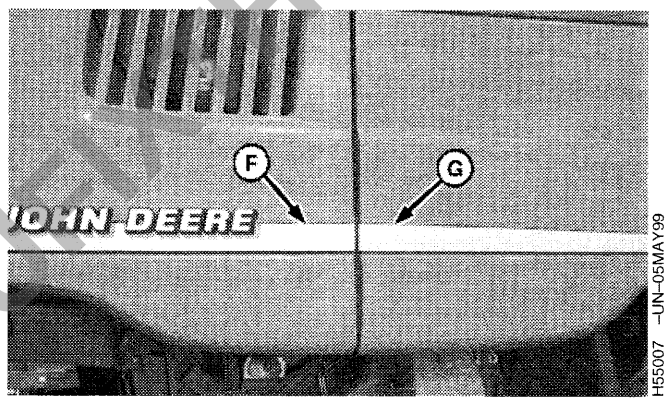

H55007 –UN–05MAY99

A—Cap Screw (4 used)
B—Cap Screw (4 used)
C—Gull Wing Panel
D—Cylinder
E—Connector
F—Decal
G—Decal

OUO6030,0000080 –19–18MAY01–1/1

80
05
2

PREVIEW - YOUFIXTHIS.COM

Download full manual at youfixthis.com

Discharge and Recovery of Air Conditioning Refrigerant

Operate the air conditioning system for 10 minutes with engine at 2000 rpm if the compressor is operable. Set temperature control for maximum cooling and blower switch at high. This allows the refrigerant oil to be circulated through the system and indicates the quantity of oil in the compressor.

Stop the engine and use the following procedure to discharge the system.

1. Connect JT02050 R134a Refrigerant Recovery and Recycling Station to a JT02046 HFC134a Refrigerant Charging Station.

NOTE: Used with JT02046 Charging Station. JT02047 Recovery, Recycling, and Charging Station can be substituted for JT02046 and JT02050.

HX,90,DD5 –19–25JUL00–1/2

2. Connect low-side hose (blue) from the charging station to suction fitting (A). Connect high-side hose (red) to discharge fitting (B).

3. Follow the manufacturer's instructions and discharge the system. Cap the fittings to prevent contamination from entering the system.

A—Suction Fitting
B—Discharge Fitting

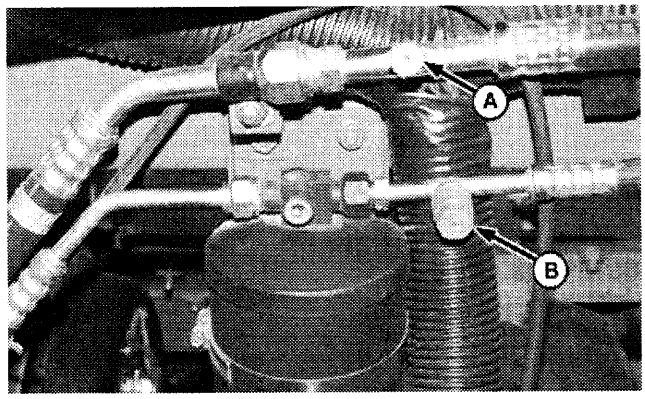

HX,90,DD5 –19–25JUL00–2/2

PREVIEW - YOUFIXTHIS.COM

90
05
7

Download full manual at youfixthis.com

Remove and Install Cab Windshield

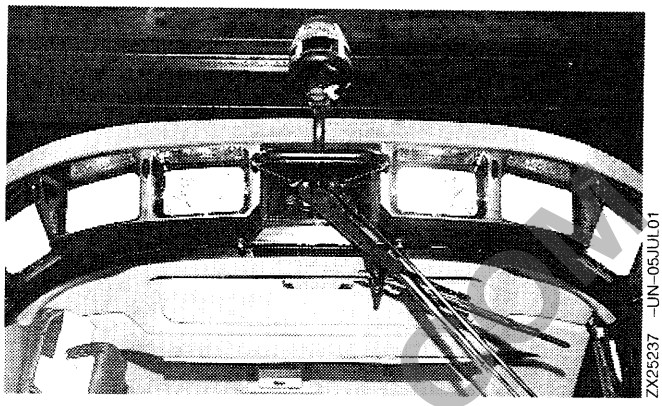
ZX25237 –UN–05JUL01

Do not attempt to install a replacement windshield unless you are qualified in glass replacement.

The original factory adhesive used to bond the windshield in place is a urethane type. When installing this glass, use an adhesive method that is compatible with urethane adhesive. These types of adhesive ARE NOT available from John Deere.

Refer to the manufacturer's adhesive/primer label and the SAFETY DATA SHEET for safety precautions.

Curing time of this type adhesive depends on weather conditions (heat and humidity). After installing this glass, it is preferred that the combine not be operated during the cure time. However, if it is necessary to operate the combine, for the first 48 hours use caution to avoid bumps and shock loads, such as when crossing a border, etc.

1. Raise feeder house all the way up and lower safety stop. The feeder house will be used as a work platform.

OUO6089,000005D –19–05JUL01–1/7

NOTE: Make sure wipers are in the parked position before starting removal procedures.

2. Remove cap screws (A) and sun visor (B).

A—Cap Screw (3 used)
B—Sun Visor

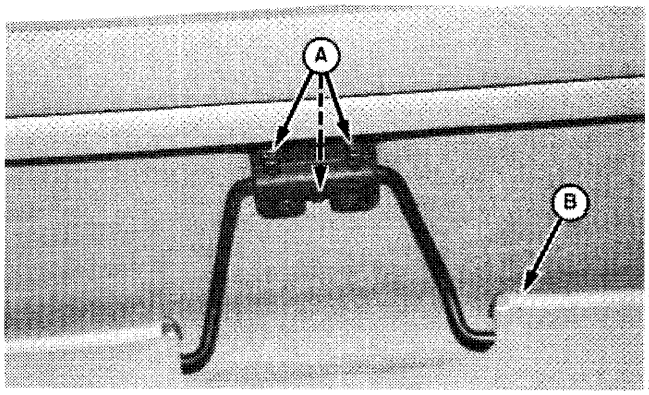

H63271 –UN–30MAR00

Continued on next page

OUO6089,000005D –19–05JUL01–2/7

PREVIEW - YOUFIXTHIS.COM

Download full manual at youfixthis.com

Remove and Install Feeder House

CAUTION: Remove feeder house only with combine on level and solid ground.

IMPORTANT: Cap all hydraulic lines and fittings during removal to prevent hydraulic system contamination.

1. Fully lower header and reel to ground and continue to depress switch for 5 seconds to relieve hydraulic system pressure. Shut off engine.
2. Remove feeder house side shields.
3. Disconnect hydraulic line (A) from reverser and remove line (B) from feeder house pivot casting.

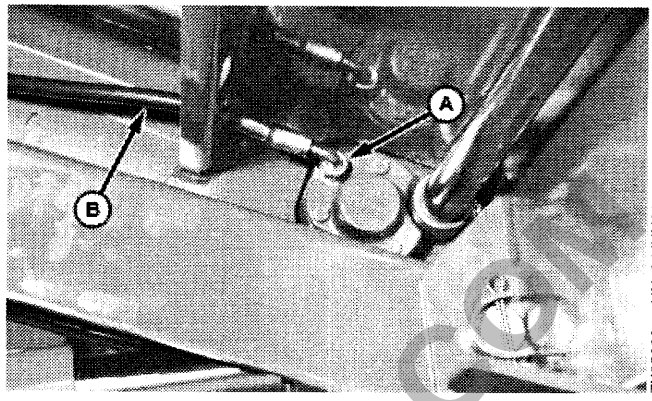

A—Fitting
B—Hydraulic Line

OUO6435,00014CF –19–24SEP01–1/9

4. Disconnect harness connector (A), fitting (B), coupler (C).
5. Disconnect linkage (D), height sensor connector and remove harness from feeder house pivot casting.
6. Remove cap screws (E) and cover (F).
7. Disconnect lines (G) at reel control valve (H).
8. Remove cap screws (I) and multi-coupler from feeder house.

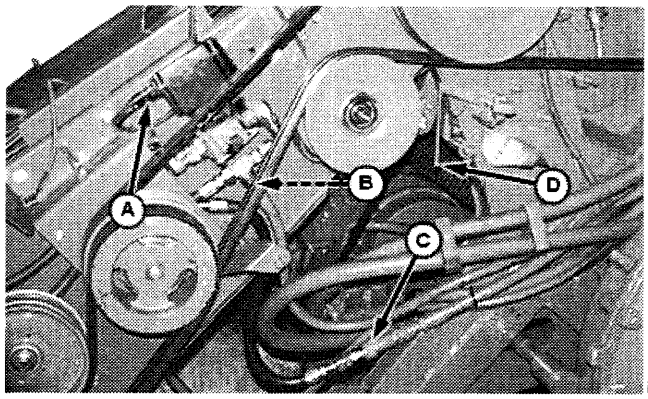

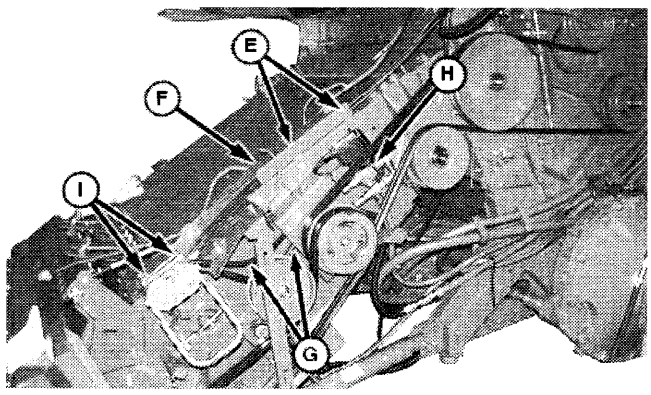

A—Harness Connector
B—Fitting
C—Coupler
D—Linkage, Height Sensor
E—Cap Screw (4 used)
F—Cover
G—Hydraulic Lines
H—Reel Control Valve
I—Cap Screw (4 used)

Continued on next page

OUO6435,00014CF –19–24SEP01–2/9

PREVIEW - YOUFIXTHIS.COM
Download full manual at youfixthis.com

1—Nut
2—Washer
3—Rubber Strap
4—Spacer
5—Carriage Bolt (2 used)
6—Bracket, Reel Pump
7—Carriage Bolt
8—Reel Pump
9—Nut (2 used)
10—Bracket, Countershaft
11—Cap Screw (4 used)
12—Snap Ring
13—Bearing
14—Housing
15—Bearing
16—Countershaft Sheave
17—Washer
18—Nut
19—Cap
20—Lubrication Fitting
21—Cap Screw (4 used)
22—Washer (4 used)
23—Guide
24—Bracket, Tensioner
25—Gauge
26—Spring, Tension
27—Washer
28—Nut (2 used)
29—Seal
30—Bushings
31—Arm, Tensioner
32—Seal
33—Washer
34—Washer
35—E-Clip
36— Sheave, Tensioner
37—Cap Screw

OUO6435,0001412 –19–19JUL01–2/2

Remove and Install Reverser Gear Case

1. Remove feeder house side shields on both sides.
2. Raise feeder house and lower safety stop.
3. Drain oil from reverser gear case.
4. Relieve belt tension and remove belt from sheave.

OUO6435,00013DE –19–18JUN01–1/5

5. Disconnect fitting (A).

A—Fitting

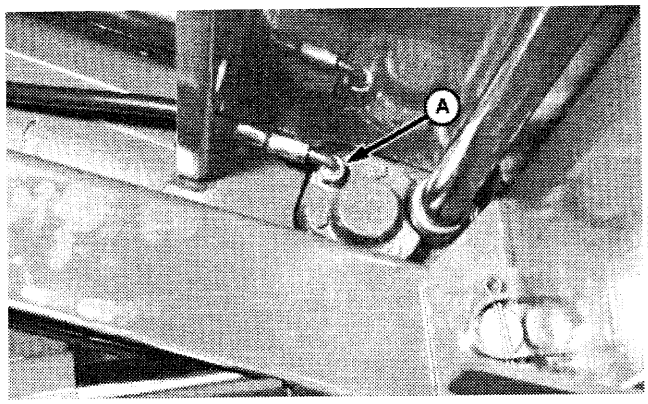

OUO6435,00013DE –19–18JUN01–2/5

NOTE: If servicing internal parts of gear case, it may be easier to remove drive sheave(s) while reverser gear case is mounted on feeder house.

6. Remove cap screws (A), washers and bushings.

A—Cap Screw (3 used)

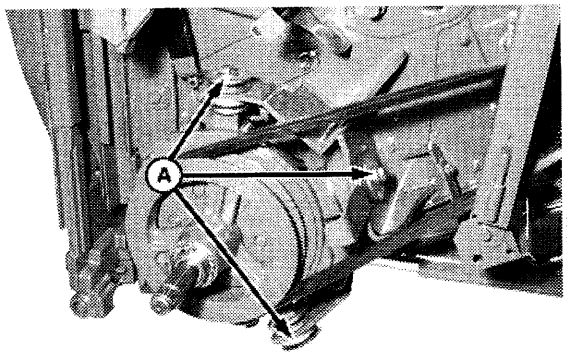

Continued on next page

OUO6435,00013DE –19–18JUN01–3/5

PREVIEW - YOUFIXTHIS.COM
Download full manual at youfixthis.com

Remove and Install Rasp Bars

NOTE: It is recommended that left- and right-hand five pack of weight matched rasp bars be purchased in lieu of single bars when replacing ALL rasp bars. Rasp bars should be replaced when serration depth is a minimum of 6 mm (1/4 in.).

1. Remove feeder house from machine. (See procedure in Section 110.)
2. Loosen nuts (B) from cylinder drive idler.
3. Remove belt (A) from cylinder drive gear case.

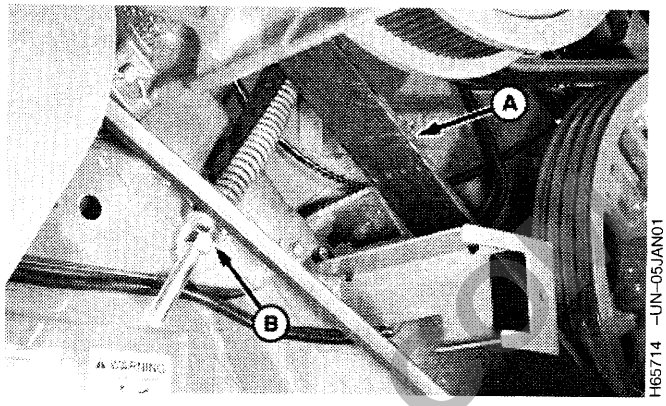

A—Belt
B—Nut (2 used)

OUO6089,000004D –19–27JUN01–1/5

4. Loosen nuts (A) on beater drive tensioner.
5. Remove beater drive belt (B) from cylinder drive sheave.

A—Nut (2 used)
B—Belt

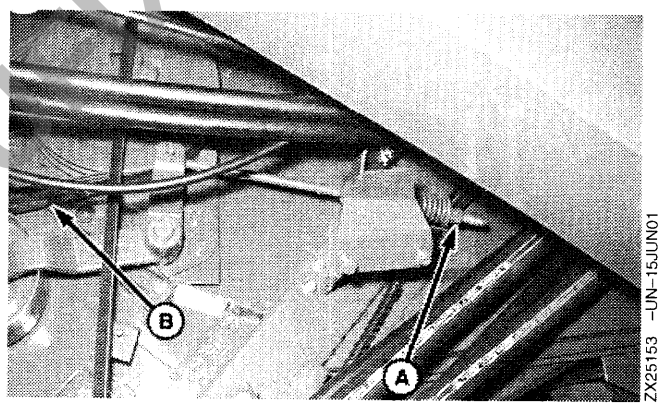

OUO6089,000004D –19–27JUN01–2/5

6. Remove all filler plates (B).
7. Clean all dirt and debris from cylinder.
8. Remove or replace rasp bars (A) one at a time. Serrations on rasp bars must be in same direction as removed.
9. Static balance cylinder in combine. (See procedure in this group).

NOTE: Balance cylinder after replacing any bars to prevent vibration.

10. Install filler plates (B).

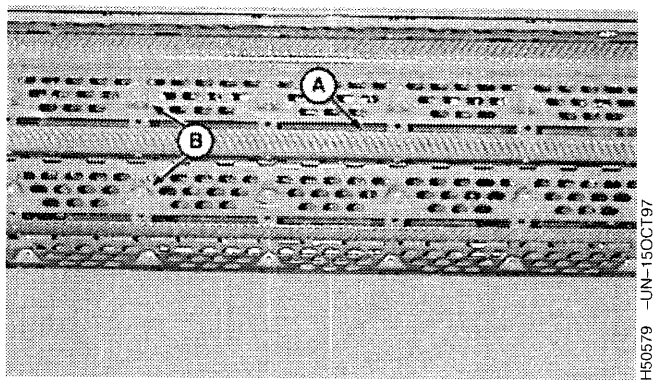

A—Rasp Bars
B—Filler Plates

Continued on next page

OUO6089,000004D –19–27JUN01–3/5

PREVIEW - YOUFIXTHIS.COM
Download full manual at youfixthis.com

1—Seal
2—Strap
3—Riser
4—Flange Nut (3 used)
5—Seal
6—Seal
7—Seal
8—Straw Walker (4 used)
9—Cap Screw (as required)
10—Cap Screw
11—Nut
12—Bracket (2 used)
13—Deflector
14—Lock Nut (2 used)
15—Support Strap
16—Washer
17—Pan
18—Flap (4 used)
19—Cap Screw (2 used)
20—Cap Screw (as required)
21—Rivet (2 used)
22—Riser (as required)
23—Cap Screw
24—Cap Screw (4 used)
25—Retainer (2 used)
26—Bearing (2 used)
27—Cover
28—Lock Nut
29—Cap Screw
30—Strap
31—Tie Band (10 used)

OUO6089,000001F –19–18JUN01–2/14

1. Remove cap screws (A) from inside of rear panel.

A—Cap Screw (12 used)

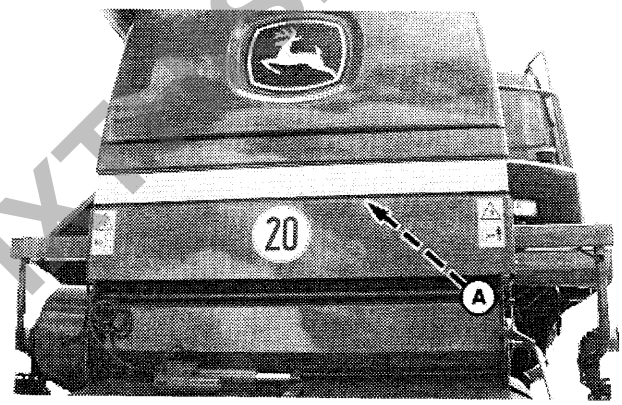

ZX25155 –UN–15JUN01

OUO6089,000001F –19–18JUN01–3/14

2. Remove cap screws (A) on both sides and panel (B).

A—Cap Screws
B—Panel

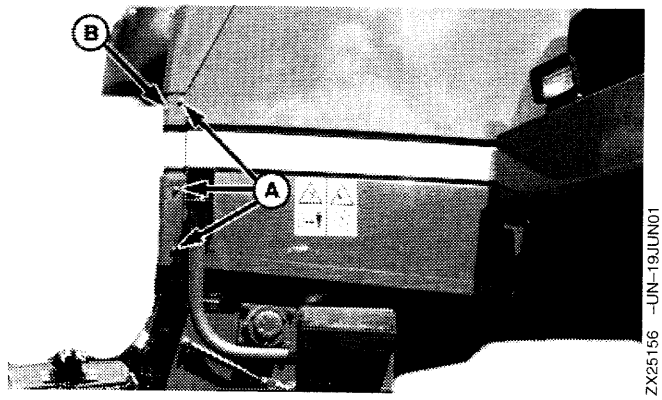

ZX25156 –UN–19JUN01

OUO6089,000001F –19–18JUN01–4/14

3. Remove nuts and cap screws (A) from both sides, retainer (B) and shield (C).

A—Cap Screws and Nuts
B—Retainer
C—Shield

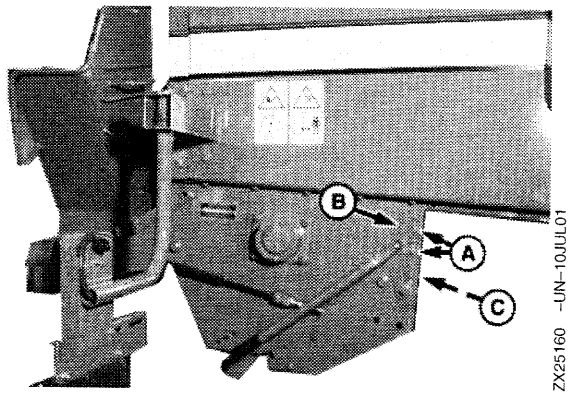

ZX25160 –UN–10JUL01

Continued on next page

OUO6089,000001F –19–18JUN01–5/14

PREVIEW - YOUFIXTHIS.COM
Download full manual at youfixthis.com

1—Support
2—Trough
3— Bolt (As Required)
4—Stripper
5—Bearing (As Required)
6—Lock Nut (21 used)
7—Cap Screw (4 used)
8—Bolt (As Required)
9—Auger (6 used)
10—Cap Screw (2 used)
11—Bracket
12—Nut, Flange (As Required)
13—Shaft, Drive
14—Bushing (As Required)
15—Housing, Flanged (16 used)
16—Bolt (As Required)
17—Collar, Locking (8 used)
18—Gear (12 used)
19—Key, Shaft (2 used)
20—Washer (2 used)
21—Key (As Required)
22—Pin, Spring (As Required)
23—Cap Screw (2 used)
24—Bearing (As Required)
25—Nut, Flange (10 used)
26—Clamp (7 used)
27—Actuator
28—Actuator
29—Cap Screw (4 used)
30—Bracket
31—Bearing
32—Bolt (3 used)
33—Cap Screw
34—Cap Screw (As Required)
35—Fitting
36—Bolt (3 used)
37—Bearing (2 used)
38—Housing, Flange (2 used)
39—Bearing
40—Shim
41—Collar, Locking
42—Angle
43—Clamp (2 used)
44—Sheet
45—Cap Screw (2 used)
46—Washer (2 used)
47—Nut, Wing (2 used)
48—Shim
49—Shield
50—Slat (2 used)
51—Strap (2 used)
52—Clamp (4 used)

OUO6089,0000028 –19–19JUN01–2/11

1. Raise feeder house and lower safety stop (A).

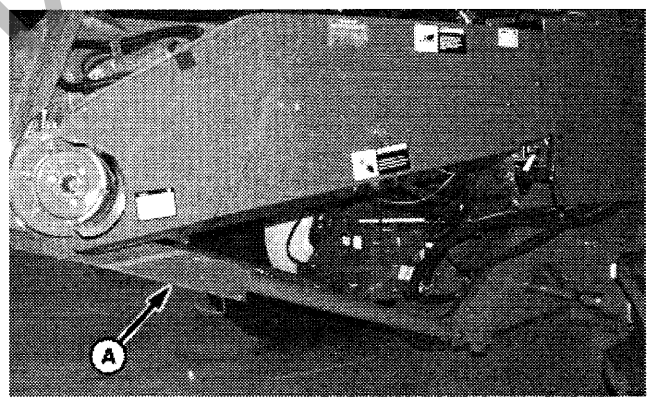

H68211 –UN–22MAY01

Continued on next page

OUO6089,0000028 –19–19JUN01–3/11

PREVIEW - YOUFIXTHIS.COM

Download full manual at youfixthis.com

NOTE: Remove gas cylinders from right hand gull wing door. Lift and support door high enough to remove augers from grain tank.

1. Loosen nuts (A) to release chain tension.
2. Remove chain (B).
3. Remove snap ring and washers from end of shaft.
4. Loosen two nuts and set screws (C) to remove sprocket (D).

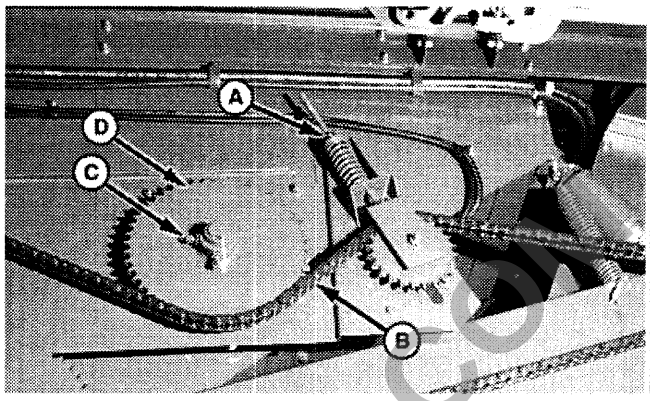

A—Nuts
B—Chain
C—Set Screw (2 used)
D—Sprocket

OUO6435,00013E8 –19–22JUN01–2/9

5. Remove locking collar (A).
6. Remove three nuts (B), flanged housing and bearing (C).

A—Locking Collar
B—Nut (3 used)
C—Bearing

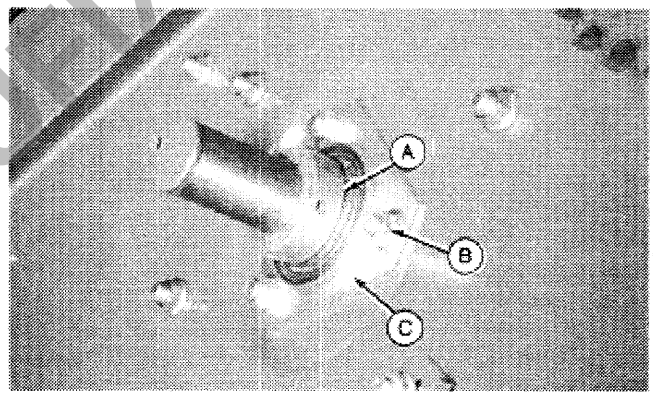

OUO6435,00013E8 –19–22JUN01–3/9

7. Remove locking collar (D) from right end.
8. Remove three nuts (E) to remove flanged housing with bearing (C).
9. Remove eight nuts (A) to remove cover (B).

A—Nut (8 used)
B—Cover
C—Flanged Housing with Bearing
D—Locking Collar
E—Nut (3 used)

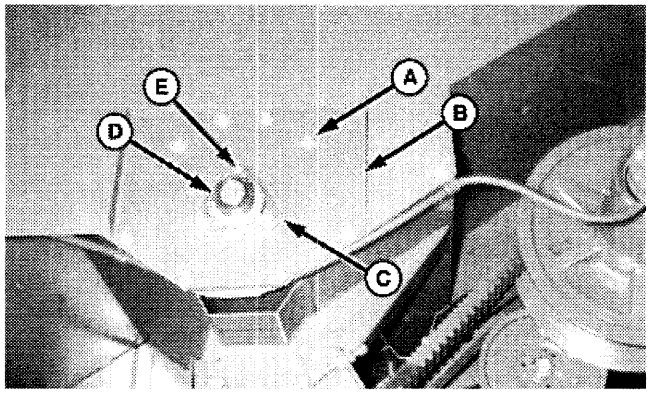

Continued on next page

OUO6435,00013E8 –19–22JUN01–4/9

PREVIEW - YOUFIXTHIS.COM
Download full manual at youfixthis.com

General Information

The inner seal (A) can be replaced without draining the gear case oil. (See REMOVE AND INSTALL ENGINE GEAR CASE in this group.)

Repair can be done on any one area without disassembling entire gear case. Only for complete disassembly is it necessary to remove gear case.

A—Inner Seal

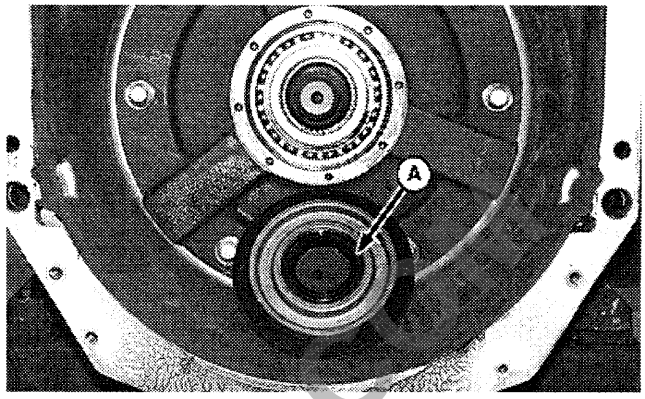

OUO6089,0000079 –19–30JUL01–1/2

Read the information in TM4698, Section 270, on how the gear case and its valves operate.

Familiarize yourself with the exploded views of the gear case before starting repair work.

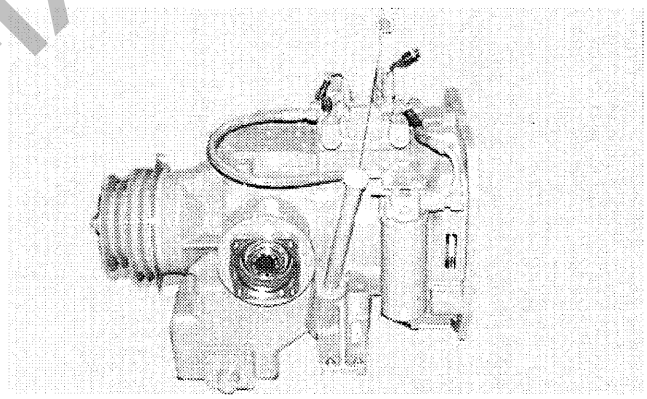

OUO6089,0000079 –19–30JUL01–2/2

Remove and Install Engine Gear Case

1. Remove left-hand gull wings. (See REMOVE AND INSTALL GULL WING in Section 80, Group 05.)
2. Swing out unloading auger. Remove panel (A) and muffler (B).
3. Fully lower header and reel to ground and continue to depress switch for 5 seconds to relieve hydraulic system pressure. Shut off engine. Remove key.

A—Panel
B—Muffler

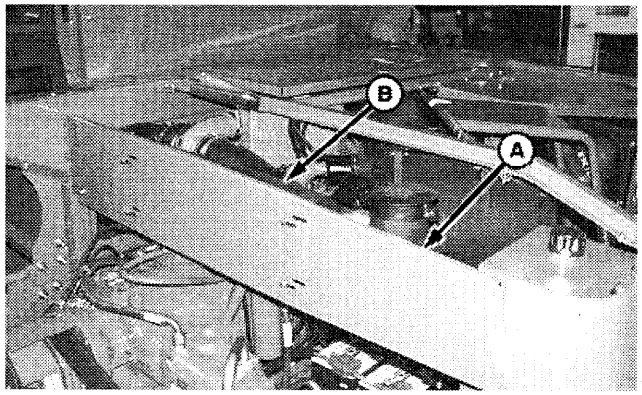

Continued on next page

OUO6089,000003E –19–21JUN01–1/13

PREVIEW - YOUFIXTHIS.COM
Download full manual at youfixthis.com

DFRW20—Compressor Holding Fixture

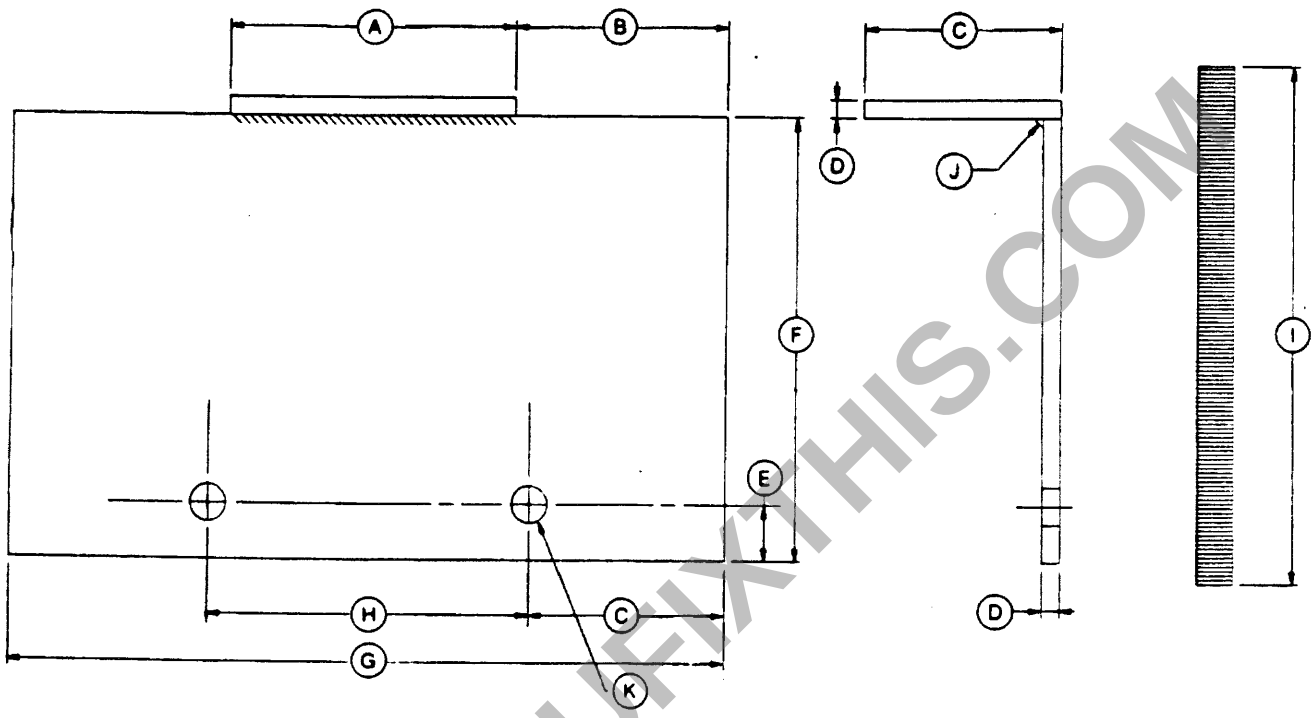

RW13619 –UN–20SEP89

A—102 mm (4 in.)
B—76 mm (3 in.)
C—70 mm (2.75 in.)
D—6.4 mm (0.25 in.)
E—19 mm (0.75 in.)
F—152 mm (6 in.)
G—254 mm (10 in.)
H—114 mm (4.5 in.)
I—178 mm (7 in.)
J—Weld
K—Two Holes

Material Required:

- 2—Steel Plates 102 x 70 mm (4 x 2.75 in.) and 254 x 152 mm (10 x 6 in.)
- 2—Threaded Steel Rods 13 x 178 mm (0.5 x 7 in.)
- 4—Matching Lock Washers and Nuts

Tool is used to hold air conditioner compressor during disassembly and assembly.

RX.DFRW20 –19–25JUL00–1/1

199
05
1

PREVIEW - YOUFIXTHIS.COM

Download full manual at youfixthis.com

PREVIEW - YOUFIXTHIS.COM

Download full manual at youfixthis.com

5. Apply TY24445 Gel Super Glue to back side of pivot thrust bushing. Install bushing.



H63155 –UN–29MAR00

AG,OUO6435,138 –19–22MAY00–5/6

6. Apply TY24445 Gel Super Glue to back side of pivot seal. Install seal.

A—Seal

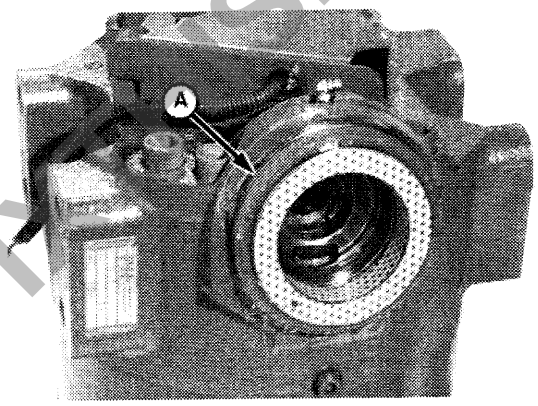

H64332 –UN–27JUN00

AG,OUO6435,138 –19–22MAY00–6/6

50
20
25

PREVIEW - YOUFIXTHIS.COM

Download full manual at youfixthis.com

15. Install cam (E), seal (D), washer (C), lock nut (B), and threaded stud (A) on right-hand side.

16. Install spacer, cam, seal, washer, and bolt on left-hand side.

A—Threaded Stud
B—Lock Nut
C—Washer
D—Seal
E—Cam
F—Shaft

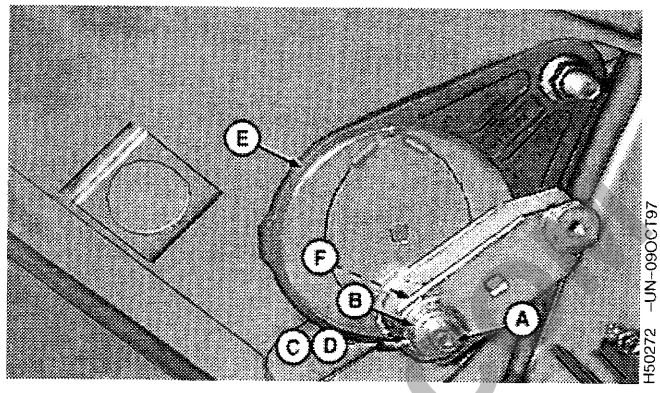

H50272 –UN–09OCT97

OUO6435,0001456 –19–09AUG01–8/15

17. Install concave adjusting motor (D) and pin (F).

18. Rotate cam (C) slightly counterclockwise to install pin (A).

19. Connect rod (B) and connector (E).

20. Install dual range cylinder drive or sheave. (See procedure in Group 10.)

A—Pin
B—Rod
C—Cam
D—Concave Adjusting Motor
E—Connector
F—Pin

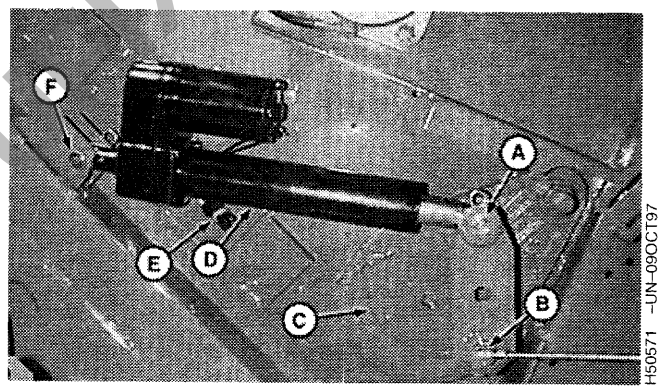

H50571 –UN–09OCT97

OUO6435,0001456 –19–09AUG01–9/15

21. Install hub (A) and tighten cap screw (B).

A—Hub
B—Cap Screw

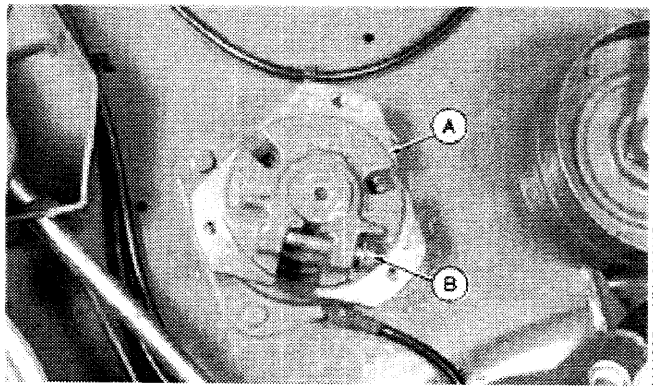

H41225 –UN–01AUG89

Continued on next page

OUO6435,0001456 –19–09AUG01–10/15

PREVIEW - YOUFIXTHIS.COM
Download full manual at youfixthis.com

PREVIEW ONLY

You're viewing 25 of 1204 pages

The full manual includes:

- All 1204 pages, complete
- Searchable PDF (find any keyword)
- No watermarks
- Instant download
- Print-ready quality

GET FULL MANUAL NOW

John Deere 9540, 9560, 9580, 9640, 9660, 9680 WTS/CWS Repair Manual



Scan or click anywhere
youfixthis.com

Click anywhere on this page to get the full manual