STANDARD ELECTRICAL SCHEMATIC (Early Version)

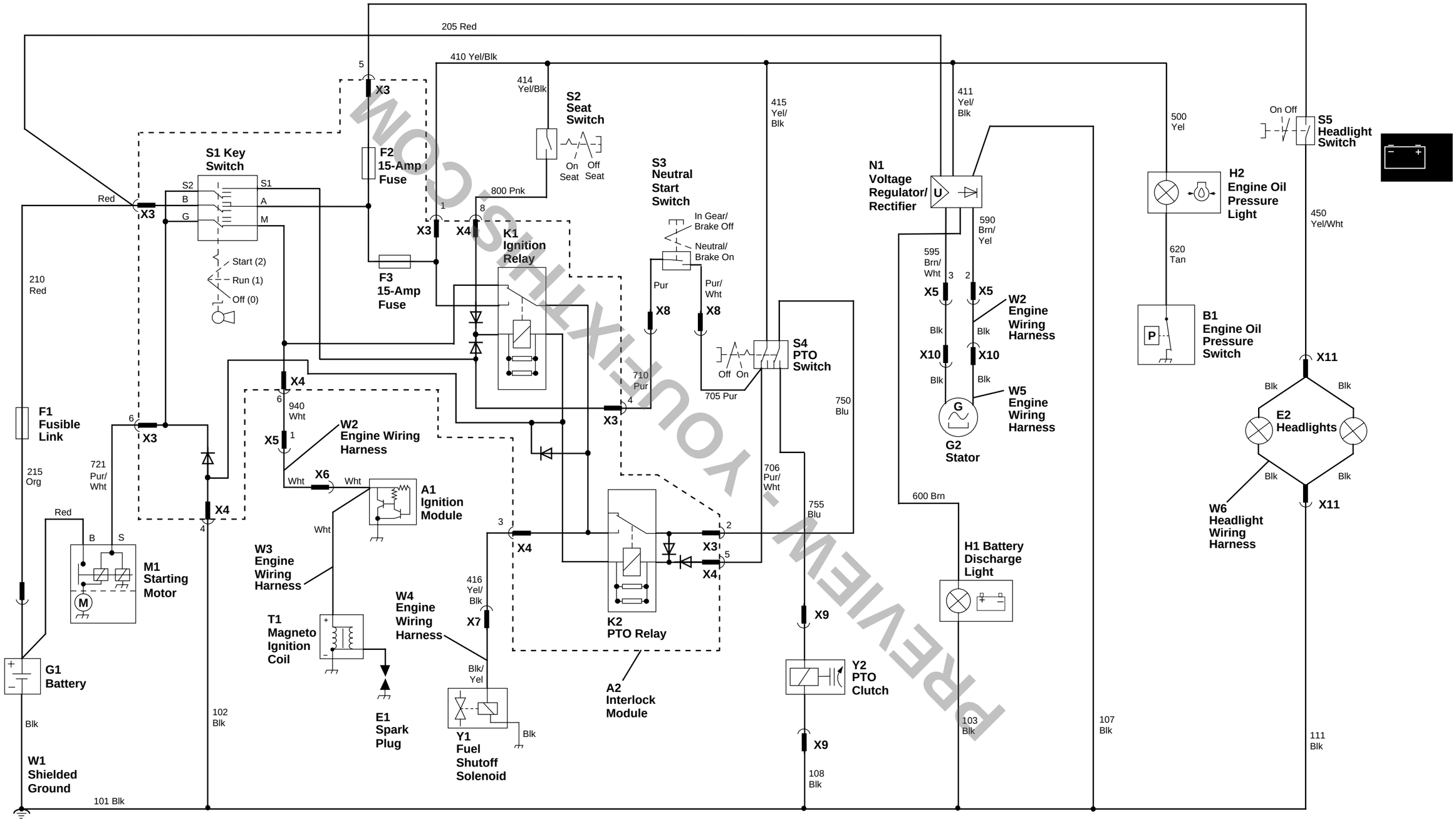

PREVIEW - YOUFIXTHIS
Download full manual at youfixthis.com

Free Wheel

When the free wheel valve control lever is engaged this rotates the eccentric, moving the actuator. The actuator moves the free wheel valve plungers (C) against the forward/reverse check valves (D and N). This forces the check valves off their seats and allows oil to flow from both sides of the motor to the reservoir. Normally the motor would have excessive resistance to movement due to dynamic braking of the hydrostatic closed loop.

A— Output (Motor) Shaft
B— Hydrostatic Drive Motor Rotating Group
C— Free Wheel Valve Plungers
D— Forward Check Valve
E— Charge Pump Relief Valve
F— Charge Pump
G— Variable Hydrostatic Pump
H— Input (Pump) Shaft
I— Transmission Case
J— Internal Oil Filter
K— Reservoir
L— Bypass Valve Screen (Early Version Only)
M— Charge Pump Bypass Valve
N— Reverse Check Valve
O— Fixed Orifice

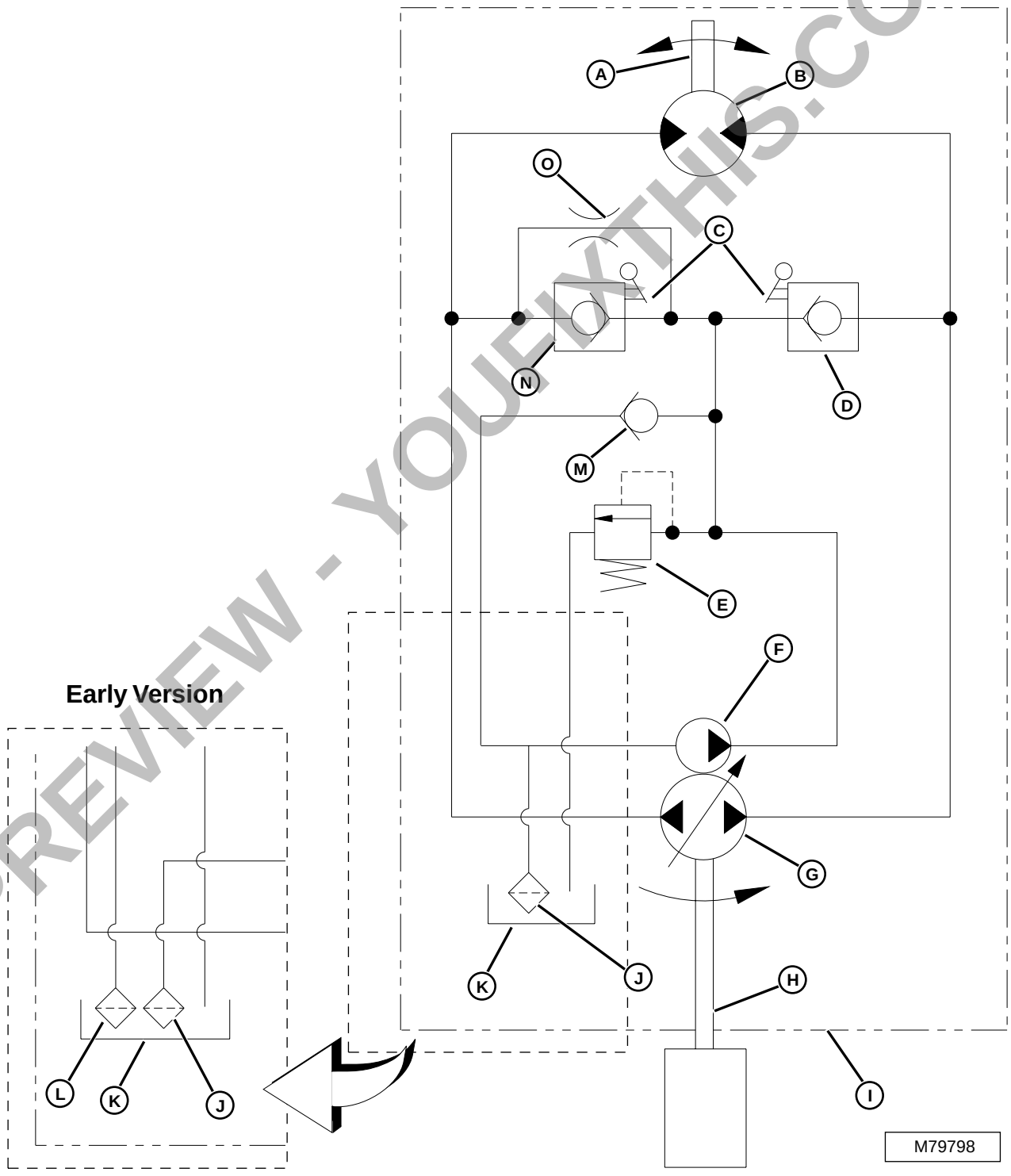

PREVIEW - YOUFIXTHIS.COM

Download full manual at youfixthis.com

COMPONENT LOCATION

EXTERNAL ENGINE COMPONENTS

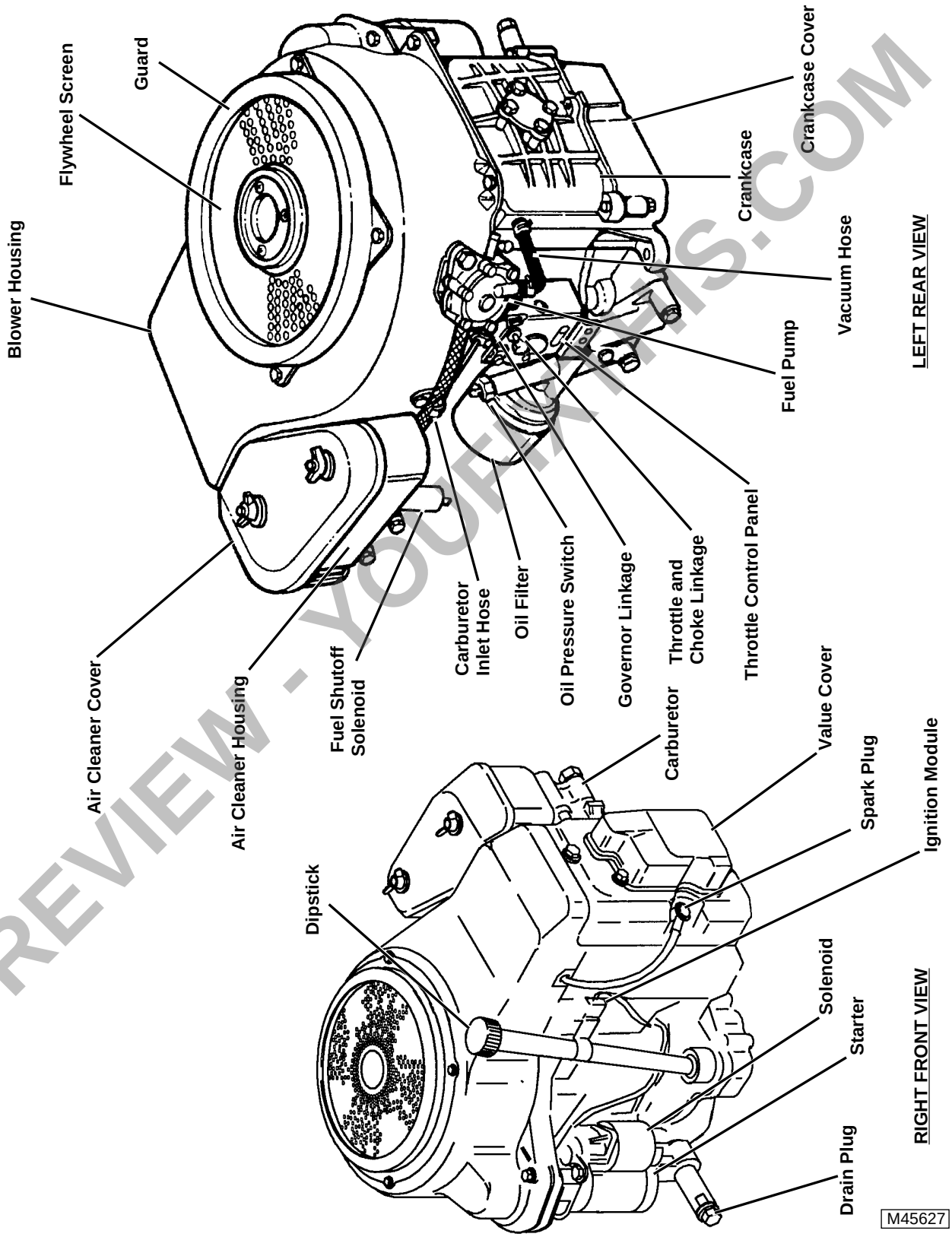

PREVIEW - YOUFIXTHIS.COM

Download full manual at youfixthis.com

TORQUE VALUES, NON-STANDARD FASTENERS

NOTE: Torques listed in this GROUP apply ONLY to "special" and/or NON-STANDARD fasteners. Unless otherwise specified, STANDARD fasteners should be torqued per "TORQUE VALUES, STANDARD METRIC FASTENER" on page 10 or "TORQUE VALUES, STANDARD INCH FASTENER" on page 12.

ENGINE

Cylinder Head and Valves
- Rocker Arm Cap Screw Torque . . . . . 10 N•m (89 lb-in.)
- Valve Adjustment Screw Jam Nut Torque . . . . . 20 N•m (180 lb-in.)
- Valve Cover Cap Screw Torque . . . . . 6 N•m (53 lb-in.)
- Cap Screw Torque in Sequence (Lubricated)
  - at 7 N•m (62 lb-in.) Increments
    - Initial Torque . . . . . 32 N•m (288 lb-in.)
    - Final Torque. . . . . 52 N•m (456 lb-in.)
- Spark Plug Torque . . . . . 20 N•m (177 lb-in.)

Crankcase Cover
- Mounting Cap Screw Torque . . . . . 26 N•m (230 lb-in.)

Piston Assembly
- Connecting Rod Cap Screw Torque . . . . . 20 N•m (177 lb-in.)

Reciprocating Balancer
- Support Shaft Nut Torque . . . . . 7 N•m (65 lb-in.)

Governor
- Governor Lever Nut Torque . . . . . 7.8 N•m (69 lb-in.)
- Engine Mounting Cap Screw Torque . . . . . 16.7—22.6 N•m (148.0—200.0 lb-in.)

Blower Housing Cap Screw Torque . . . . . 10 N•m (89 lb-in.)

Flywheel Screen To Cooling Fan Cap Screw Torque . . . . . 6 N•m (53 lb-in.)

Cooling Fan To Flywheel Cap Screw Torque . . . . . 10 N•m (89 lb-in.)

Cooling Fan Bracket To Flywheel Cap Screw Torque . . . . . 12 N•m (102 lb-in.)

Flywheel Mounting Nut Torque
- FC420V . . . . . 137 N•m (101 lb-ft)
- FC540V . . . . . 172 N•m (127 lb-ft)

Oil Drain Plug Torque . . . . . 23 N•m (200 lb-in.)

Stator
- Cap Screw Torque . . . . . 6 N•m (53 lb-in.)

Magneto Ignition Coil
- All Engines Prior To and Including:
- FC420V-DS10 (—FC420VB50633)
- FC540V-DS15 (—FC540VA00385)
  - Cap Screw Torque . . . . . 6 N•m (53 lb-in.)

Magneto Ignition Coil With Ignitor Module
- All Engines After and Including:
- FC420V-DS10 (FC420VB50633—)
- FC540V-DS15 (FC540VA00385—)
  - Cap Screw Torque . . . . . 6 N•m (53 lb-in.)

Starter
- Starter-To-Engine Mounting Cap Screw Torque . . . . . 16 N•m (142 lb-in.)
- Starter End Cover Cap Screw Torque . . . . . 9 N•m (80 lb-in.)

PREVIEW - YOUFIXTHIS.COM

Download full manual at youfixthis.com

TESTS AND ADJUSTMENTS

THROTTLE CABLE TEST AND ADJUSTMENT

Reason:

To make sure the throttle control lever obtains the full range of motion from SLOW idle, to FAST idle, and into FULL CHOKE position at the throttle control panel.

Equipment:

- 6 mm (15/64 in.) Drill Bit or
- 6 x 30 mm Flat Head Pin (45M7036)

Test Procedure:

1. Move throttle control lever from SLOW idle to FAST idle position. A solid “detent” should be felt to assure that the control lever is in the FAST idle position.

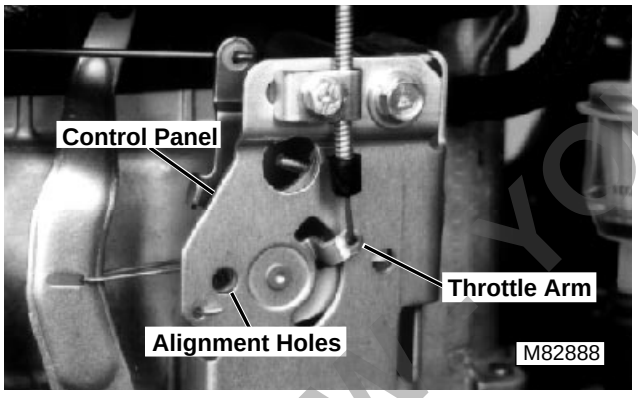

2. Check alignment holes in control panel and throttle arm. They MUST be in visual alignment.
3. Move throttle control lever into CHOKE position, then back into FAST idle position. Again, holes in control panel and throttle arm MUST be aligned.

Results:

- If holes align in FAST idle position, throttle cable is adjusted properly. Test and adjust choke plate. (See CHOKE PLATE TEST AND ADJUSTMENT.
- If holes DO NOT align in FAST idle position, perform following Adjustment Procedure.

Adjustment Procedure:

1. Move throttle control lever to FAST idle position.

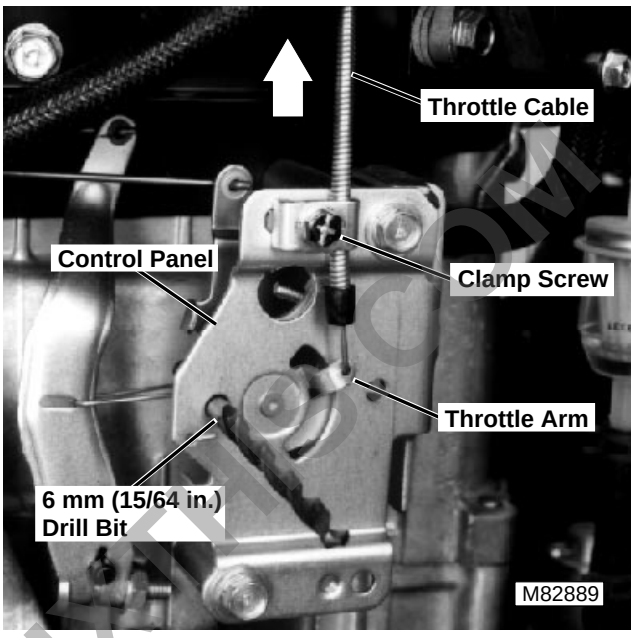

2. Loosen clamp screw.
3. Align hole in throttle arm with hole in control panel. Insert a 6 mm (15/64 in.) drill bit or 6 x 30 mm flat head pin (45M7036) through holes to keep throttle arm from moving. Be sure drill bit or flat head pin is perpendicular to the control panel.
4. Pull throttle cable up (arrow) and tighten screw.
5. Remove drill bit.
6. Repeat test procedure.
7. Move throttle control lever through full range several times to be sure linkage is not binding.

CHOKE PLATE TEST AND ADJUSTMENT

Reason:

To make sure that the choke plate is fully closed when the throttle control lever is in the FULL CHOKE position and completely opens choke plate at FAST idle position.

Test Procedure:

IMPORTANT: Test and adjust throttle cable before adjusting choke, to ensure accurate choke adjustment.

1. Check and adjust throttle cable.
2. Move throttle control lever to full CHOKE position.

PREVIEW YOUFIXTHIS.COM

Download full manual at youfixthis.com

ELECTRICAL COMPONENT CONNECTIONS

A2 INTERLOCK MODULE - X2 CONNECTOR

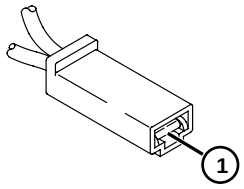

Terminal	Circuit #	Color	Size (Gauge)	Circuit Termination Points
1[a]	205	Red	1.0 mm^2 (16)	N1 - Voltage Regulator
1[a]	210	Red	2.0 mm^2 (14)	F1 - Fusible Link

A2 INTERLOCK MODULE - X3 CONNECTOR

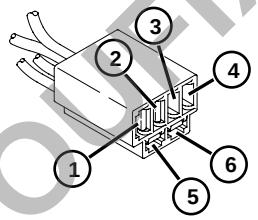

Terminal	Circuit #	Color	Size (Gauge)	Circuit Termination Points
1	410	Yel/Blk	1.0 mm^2 (16)	S2 - Seat Switch S4 - PTO Switch N1 - Voltage Rec/Reg H2 - Engine Oil Pressure Light
2	750	Blu	0.8 mm^2 (18)	S4 - Pro Switch
3[b]	—	—	—	—
1[a]	205	Red	1.0 mm^2 (16)	N1 - Voltage Regulator
1[a]	210	Red	2.0 mm^2 (14)	F1 - Fusible Link
4	710	Pur	1.0 mm^2 (16)	S3 - Neutral Start Switch
5	412	Yel/Blk	0.8 mm^2 (18)	S5 - Headlight Switch
6	721	Pur/Wht	1.0 mm^2 (16)	M1 - Starting Motor

[a] Late model tractors only
[b] Early model tractors only

PREVIEW - YOUFIXTHIS.COM

Download full manual at youfixthis.com

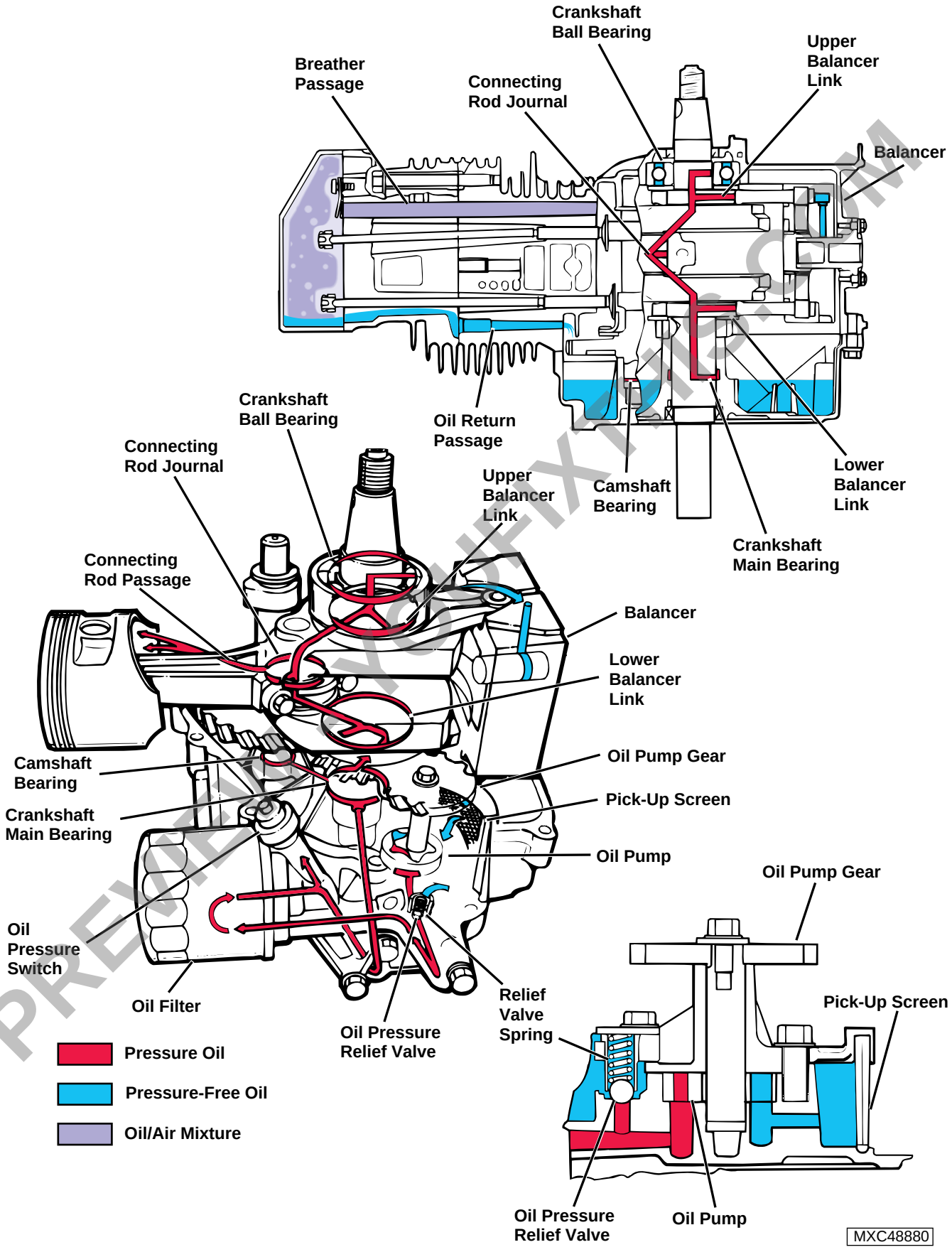

PREVIEW OF YOUFIXTHIS.COM

Download full manual at youfixthis.com

TROUBLESHOOTING

ENGINE AND FUEL SYSTEM TROUBLESHOOTING CHART

PROBLEM OR SYMPTOM / CHECK OR SOLUTION	Engine cranks but will not start or starts hard	Engine will not stay running, runs rough, or irratically	Engine dies frequently	Engine backfires (afterbang)	Engine surges, or has uneven or uncontrolled rpm	Engine has low power	Engine has no spark	Engine will not crank	Lack of fuel in carburetor	Engine floods	Exhaust smoke black or uses too much fuel	Exhaust smoke blue or has excessive oil consumption	Engine has low oil pressure	Fuel in oil	Engine overheats	Excessive engine noise or vibration
Spark plug fouled, defective, or gap not correct. Incorrect spark plug	●	●				●	●			●	●			●	●	
Defective ignition components	●	●	●	●	●	●	●			●	●			●		
Starter worn. Cranking rpm too slow	●							●								
Fuel filter or line restricted. Fuel pump weak, restricted, or leaking. Fuel stale, contains water, or wrong type	●	●	●	●	●	●			●		●	●				
Fuel pump not operating	●	●							●							
Air filter element(s) plugged, oil soaked, or restricted	●	●			●	●				●	●			●		
Choke, throttle, or governor linkage misadjusted. Carburetor misadjusted	●	●	●	●	●	●			●	●	●			●		
Carburetor worn, contaminated with debris or varnish. Passages plugged. Wrong jets	●	●	●	●	●	●			●					●		
Carburetor, intake & exhaust manifold, or cylinder head gaskets leaking or damaged	●	●		●	●	●										●
Low compression from worn piston, rings, cylinder, valves or warped head	●	●				●						●		●		●

PREVIEW - YOUFIXTHIS.COM

Download full manual at youfixthis.com

GENERAL VEHICLE SPECIFICATIONS

Model:	GT242	GT262	GT275
ENGINE			
Make	John Deere “K” Series, Air Cooled	John Deere “K” Series, Air Cooled	John Deere “K” Series, Air Cooled
Manufacturer	Kawasaki	Kawasaki	Kawasaki
Type	Gasoline	Gasoline	Gasoline
Model	FC420V-ES10	FC540V-ES15	FV540V-KS00
Aspiration	Natural	Natural	Natural
Horsepower	10.4 kW (14 HP)	12.6 kW (17 HP)	12.6 kW (17 HP)
Cylinders	1	1	1
Displacement	423 cm^3 (25.8 cu. in.)	535cm^3 (32.6 cu. in.)	535 cm^3 (32.6 cu. in.)
Stroke/Cycle	4 Cycle	4 Cycle	4 Cycle
Bore	89 mm (3.500 in.)	89 mm (3.500 in.)	89 mm (3.500 in.)
Stroke	68 mm (2.58 in.)	86 mm (3.360 in.)	86 mm (3.360 in.)
Compression Ratio		8.3:1	8.3:1
Slow Idle	1550 ± 75 rpm	1550 ± 75 rpm	1550 ± 75 rpm
Fast Idle	3350 ± 50 rpm	3350 ± 50 rpm	3350 ± 50 rpm
Valves	Overhead	Overhead	Overhead
Lubrication	Pressurized	Pressurized	Pressurized
Oil Filter	Full Flow Filter	Full Flow Filter	Full Flow Filter
Cooling System	Air Cooled	Air Cooled	Air Cooled
Air Cleaner	Dual Stage Paper Air Filter and Foam Precleaner	Dual Stage Paper Air Filter and Foam Precleaner	Dual Stage Paper Air Filter and Foam Precleaner
Muffler	Horizontal Discharge Below Frame	Horizontal Discharge Below Frame	Horizontal Discharge Below Frame
Engine Oil Capacity (with filter)	1.5 L (3.2 pt.)	1.8 L (3.8 pt.)	1.8 L (3.8 pt.)

PREVIEW - YOUFIXTHIS.COM

Download full manual at youfixthis.com

GT242, GT262, and GT275 Lawn and Garden Tractors

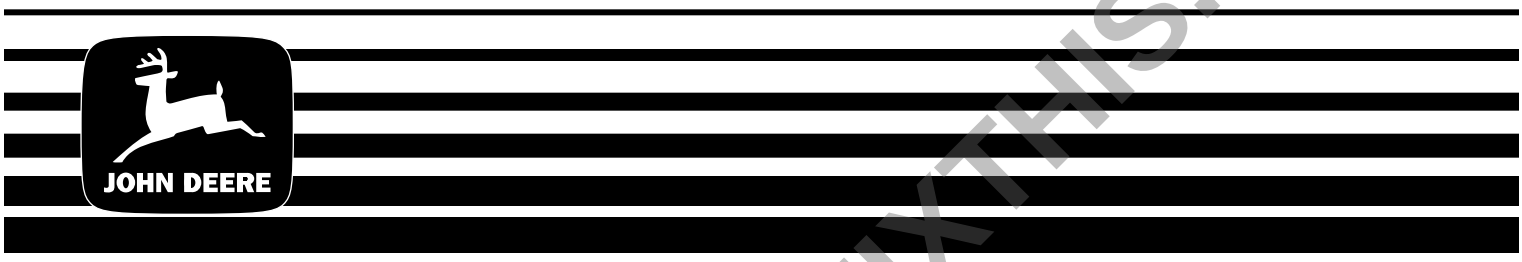

TECHNICAL MANUAL

PREVIEW - YOUFIXTHIS.COM

John Deere
Worldwide Commercial and Consumer Equipment Division

TM1582 (15JUL97)
Replaces TM1582 (22DEC94) and TM1515 (01SEPT92)

Litho in U.S.A

Download full manual at youfixthis.com

CONTENTS

Page

GENERAL VEHICLE SPECIFICATIONS 2-2
TORQUE VALUES, NON-STANDARD FASTENERS 2-7
ENGINE 2-7
POWER TRAIN, GEAR 2-8
POWER TRAIN, HYDROSTATIC 2-8
OTHER 2-8
METRIC FASTENER TORQUE VALUES 2-10
METRIC FASTENER TORQUE VALUE – GRADE 7 2-11
INCH FASTENER TORQUE VALUES 2-12
GASOLINE SPECIFICATIONS 2-13
4–CYCLE ENGINES – NORTH AMERICA 2-13
GASOLINE STORAGE 2-13
ENGINE OIL SPECIFICATIONS 2-14
4–CYCLE GASOLINE ENGINE OIL –NORTH AMERICA 2-14
BREAK–IN 4-CYCLE GASOLINE ENGINE OIL – NORTH AMERICA 2-15
HYDROSTATIC TRANSMISSION AND HYDRAULIC OIL 2-16
ANTI-CORROSION GREASE SPECIFICATIONS 2-17
GENERAL APPLICATION GREASE SPECIFICATIONS 2-18
GREASE – NORTH AMERICA 2-18
ALTERNATIVE LUBRICANTS 2-19
SYNTHETIC LUBRICANTS 2-19
LUBRICANT STORAGE 2-19
MIXING OF LUBRICANTS 2-19
OIL FILTERS 2-19
SERIAL NUMBER LOCATION 2-20
MACHINE IDENTIFICATION NUMBER 2-20
ENGINE SERIAL NUMBER 2-20
CARBURETOR SERIAL NUMBER 2-20
GEAR TRANSAXLE SERIAL NUMBER LOCATION 2-20
HYDROSTATIC TRANSMISSION SERIAL NUMBER 2-20
MOWER DECK SERIAL NUMBER LOCATION 2-21

PREVIEW - YOUFIXTHIS.COM

Download full manual at youfixthis.com

RECOGNIZE SAFETY INFORMATION



This is the safety-alert symbol. When you see this symbol on your machine or in this manual, be alert to the potential for personal injury.

Follow recommended precautions and safe servicing practices.

Understand Signal Words

A signal word—DANGER, WARNING, or CAUTION—is used with the safety-alert symbol. DANGER identifies the most serious hazards.

DANGER or WARNING safety signs are located near specific hazards. General precautions are listed on CAUTION safety signs. CAUTION also calls attention to safety messages in this manual.

REPLACE SAFETY SIGNS

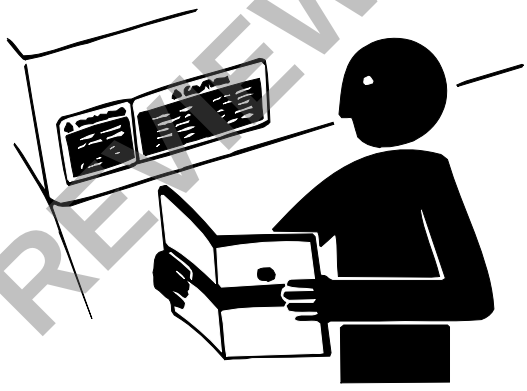

Replace missing or damaged safety signs. See the machine operator's manual for correct safety sign placement.

HANDLE FLUIDS SAFELY-AVOID FIRES

Be Prepared For Emergencies



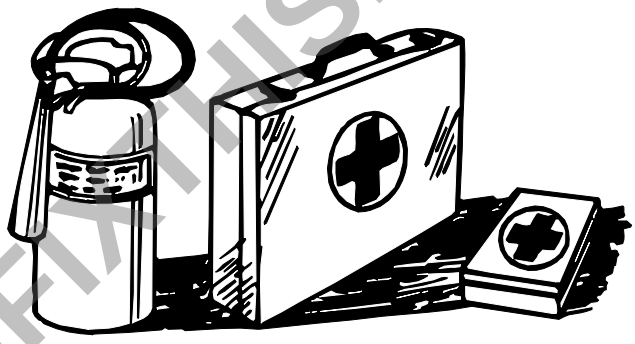

When you work around fuel, do not smoke or work near heaters or other fire hazards.
Store flammable fluids away from fire hazards. Do not incinerate or puncture pressurized containers.
Make sure machine is clean of trash, grease, and debris.
Do not store oily rags; they can ignite and burn spontaneously.
Be prepared if a fire starts.
Keep a first aid kit and fire extinguisher handy.
Keep emergency numbers for doctors, ambulance service, hospital, and fire department near your telephone.

PREVIEW - YOUFIXTHIS.COM

Download full manual at youfixthis.com



M85682

Model GT242



M85683

Model GT262



M85684

Model GT275

PREVIEW - YOUFIXTHIS.COM

Download full manual at youfixthis.com

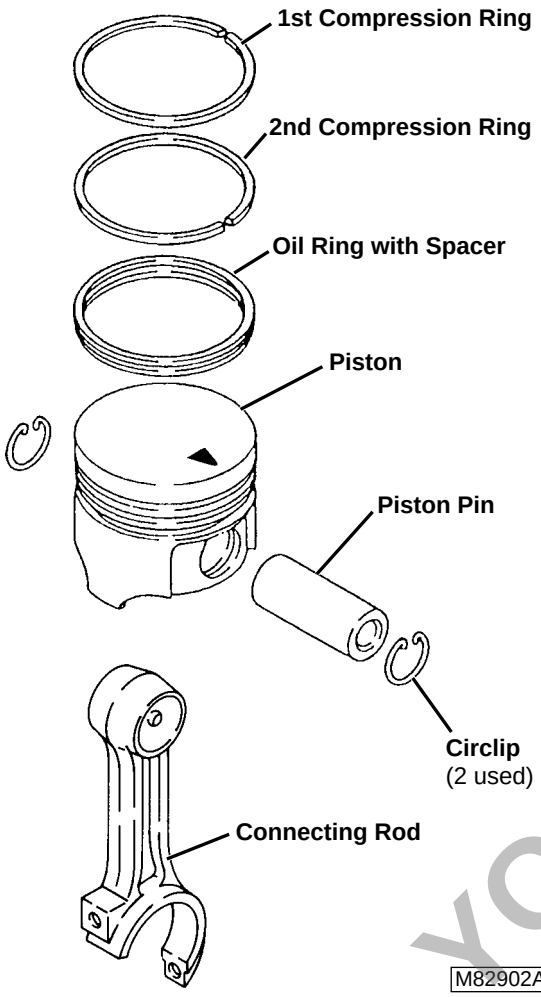

Assembly

- Apply a thin film of clean engine oil to piston pin and connecting rod bearing during assembly.

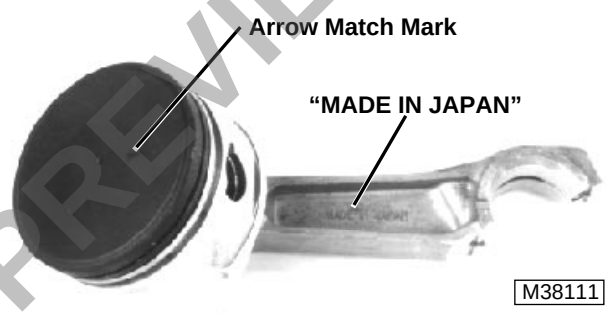

1. Align arrow match mark on piston head with "MADE IN JAPAN" on connecting rod, or if piston is marked with an "R" or "L", align the "R" or "L" on the piston with the Japanese character on the connecting rod.
2. Install piston pin and circlips.
3. Before installing rings on piston, check ring end gap in cylinder bore. (See Inspection—Piston Rings procedure.)

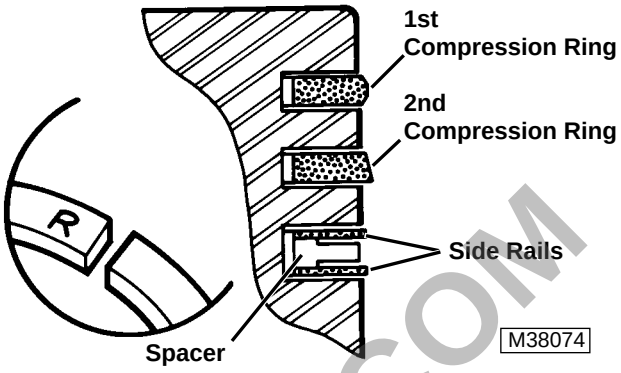

4. Install oil control and compression rings:

   Oil ring: Install spacer, then side rails. Align side rail end gaps **180° apart** in the position shown.

   Install 2nd compression ring in middle groove with letter mark (R or L) or other mark **facing up**. Ring should turn freely in groove. Turn ring until gap is **120° away from oil ring gap**.

   Install 1st compression ring in top groove. Ring should turn freely in groove. Turn ring until gap is **120° away from second ring gap**.

Inspection

Piston:

IMPORTANT: Do not use a caustic cleaning solution or a wire brush to clean piston.

1. Remove all deposits from the piston.

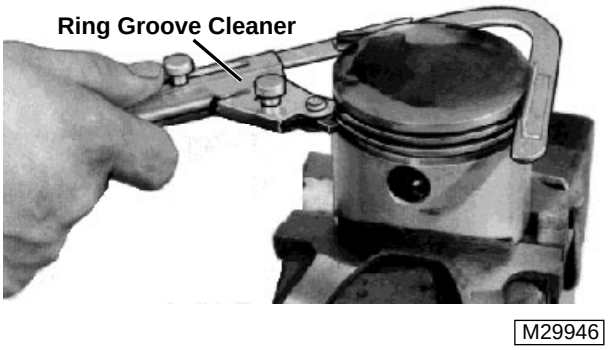

2. Clean carbon from piston ring grooves with a ring groove cleaner. If cleaning tool is not available, break an old ring and use it to carefully clean groove.
3. Check that all oil return passages in grooves are open.
4. Inspect piston for scoring or fractures. Replace piston if damaged.

PREVIEW - YOUFIXTHIS.COM

Download full manual at youfixthis.com

PTO CIRCUIT DIAGNOSIS

Test Conditions:

- Key switch in RUN position.
- PTO switch in OFF position.
- Parking brake ENGAGED. (Neutral start switch CLOSED.)
- Operator on seat. (Seat switch CLOSED.)

Test Location	Normal	If Not Normal
1. Battery positive (+) terminal.	11.8—13.2 volts.	Test Battery.
2. Key switch “B” terminal.	Battery voltage.	Check orange wire No. 215, red wire No. 210, fusible link (F1), red wire (connector to key switch) and connections.
3. PTO Switch.	Battery voltage.	Check yellow/black wires No. 415 and 410, fuse (F3) and connections. If ok, replace interlock module.
4. PTO Switch.	Battery voltage.	Test PTO switch. (See procedure in Tests and Adjustments.)
5. Neutral start switch.	Battery voltage.	Check purple wire No. 705 and connections.
6. Neutral start switch.	Battery voltage.	Test neutral start switch. (See procedure in Tests and Adjustments.)
7. Interlock module, Terminal X3—3.	Battery voltage.	Check purple wire No. 710 and connections.
8. Seat switch.	Battery voltage.	Check yellow/black wires No. 414 and 410, fuse (F3) and connections.
9. Seat switch.	Battery voltage.	Test seat switch. (See procedure in Tests and Adjustments.)
10. Interlock module, terminal X4—D.	Battery voltage.	Check pink wire No. 800 and connections.

Test Conditions:

- Key switch in OFF position.

Test Location	Normal	If Not Normal
11. Interlock module, terminal X4—E.	Maximum 0.1 ohms resistance.	Check battery negative cable, shielded ground, and black wires No. 101 and 102.

Test Conditions:

- Key switch in RUN position.

Test Location	Normal	If Not Normal
12. Interlock module, terminal X4—F.	Battery voltage.	Replace interlock module.

PREVIEW - YOUFIXTHIS.COM

Download full manual at youfixthis.com

HYDROSTATIC TRANSMISSION COMPONENTS

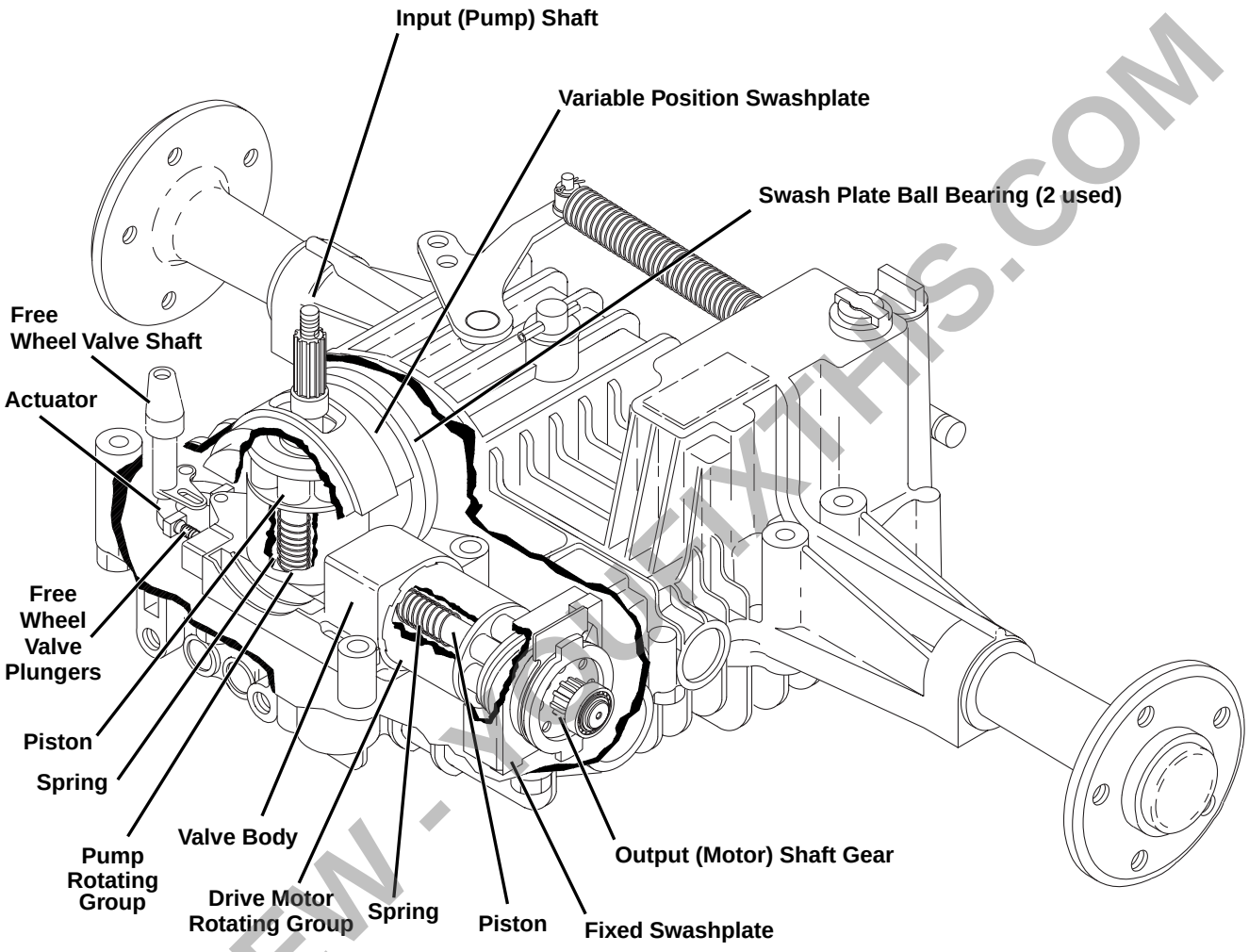

M82809AE

PREVIEW - YOUFIXTHIS.COM

Download full manual at youfixthis.com

BRAKES DO NOT ENGAGE WHEN PEDAL DEPRESSED - GT275

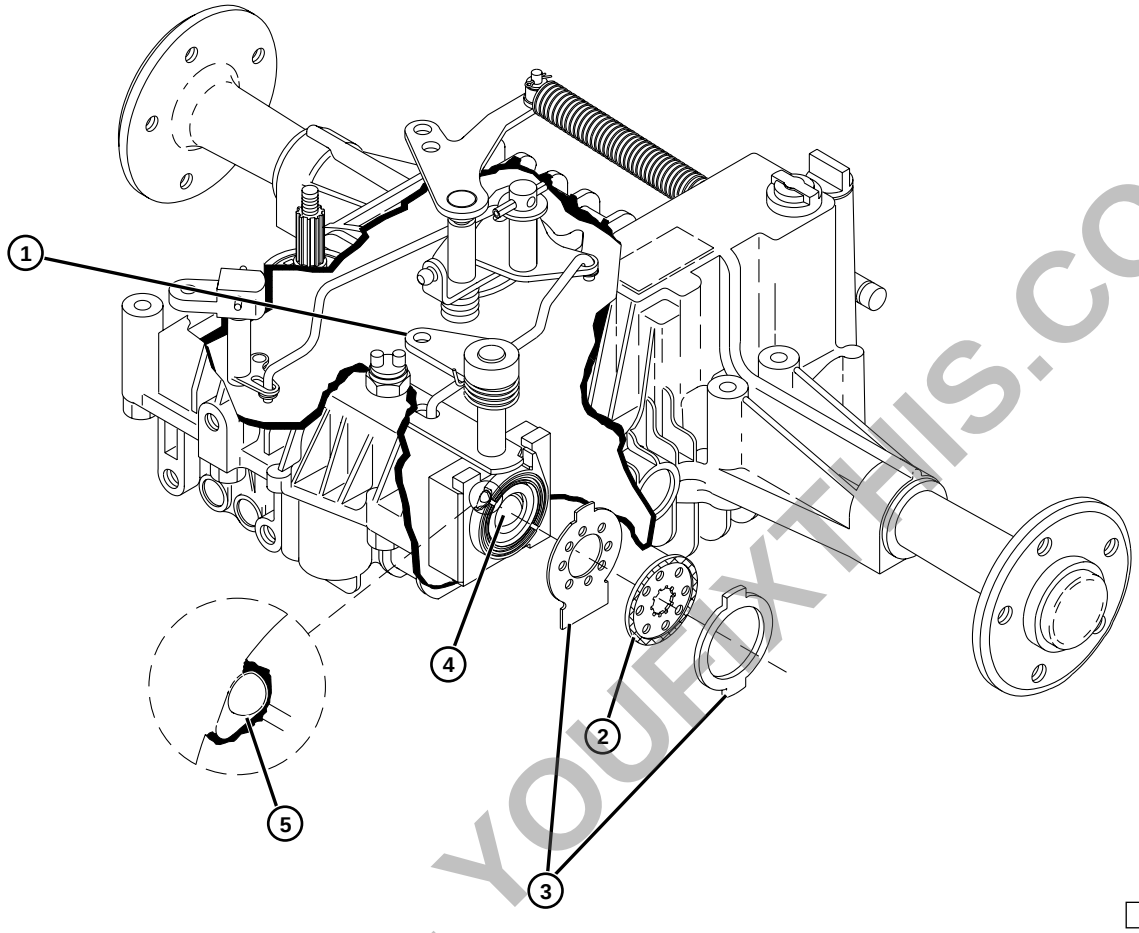

M82752AE

PREVIEW - YOUFIXTHIS.COM

Download full manual at youfixthis.com

PREVIEW ONLY

You're viewing 17 of 429 pages

The full manual includes:

- All 429 pages, complete
- Searchable PDF (find any keyword)
- No watermarks
- Instant download
- Print-ready quality

GET FULL MANUAL NOW

John Deere GT242, GT262, GT275 Technical Manual

Scan or click anywhere
youfixthis.com

Click anywhere on this page to get the full manual