Group 000 - Safety

Understand Signal Words







Signal Words

A signal word—DANGER, WARNING, or CAUTION—is used with the safety-alert symbol. DANGER identifies the most serious hazards.

DANGER or WARNING safety signs are located near specific hazards. General precautions are listed on CAUTION safety signs. CAUTION also calls attention to safety messages in this manual.

PREVIEW - YOUFIXTHIS.COM

Download full manual at youfixthis.com

Group 010 - Engine Rebuild

Check Air Intake System

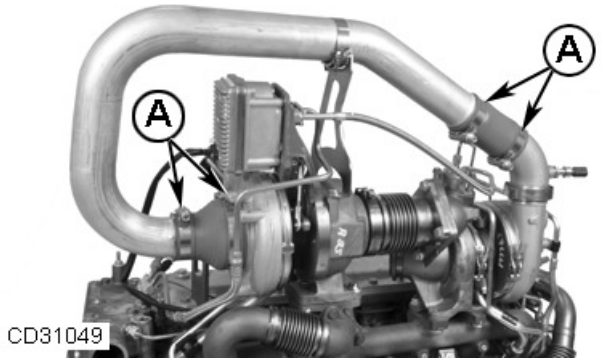

LEGEND:

A	Hose clamps

Turbocharger Hose Clamps

[1] - Replace air cleaner primary filter element. (See operator´s manual.) Replace secondary element if primary element has holes in it.

[2] - Check condition of air intake hoses and pipes. The Tier 4 engine has an extensive air intake and exhaust system with numerous joints. Replace hoses and/or pipes that are cracked, split, or otherwise in poor condition.

[3] - Check hose clamps (A) for tightness. Replace clamps that cannot be properly tightened. This will help prevent dust from entering the air intake system which could cause serious engine damage.

Check and Service Cooling System

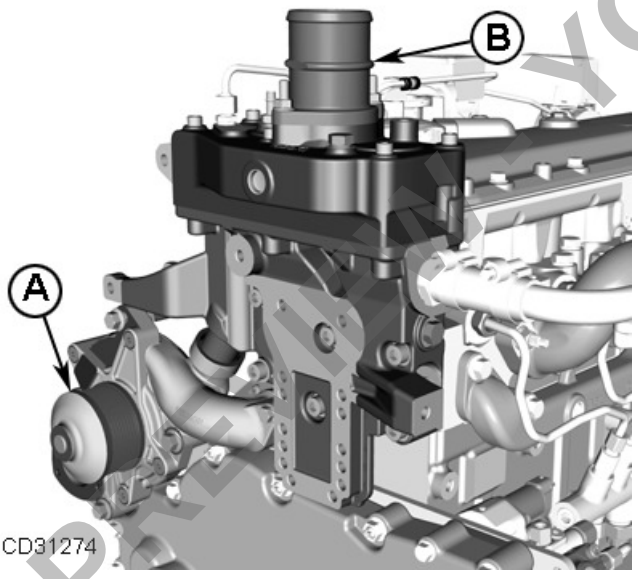

LEGEND:

A	Coolant pump
B	Thermostat housing

Check cooling system

[1] - Remove debris that has accumulated on or near radiator.

[2] - Visually inspect entire cooling system and all components for leaks or damage. Repair or replace as necessary.

[3] - Drain coolant.

[4] - Remove and check thermostat(s). See Thermostat — Testing in Section 02, Group 070.

PREVIEW BY YOUFIXTHIS.COM

Download full manual at youfixthis.com

Group 120 - Base Engine Operation

Engine Sectional View Component Location Diagrams

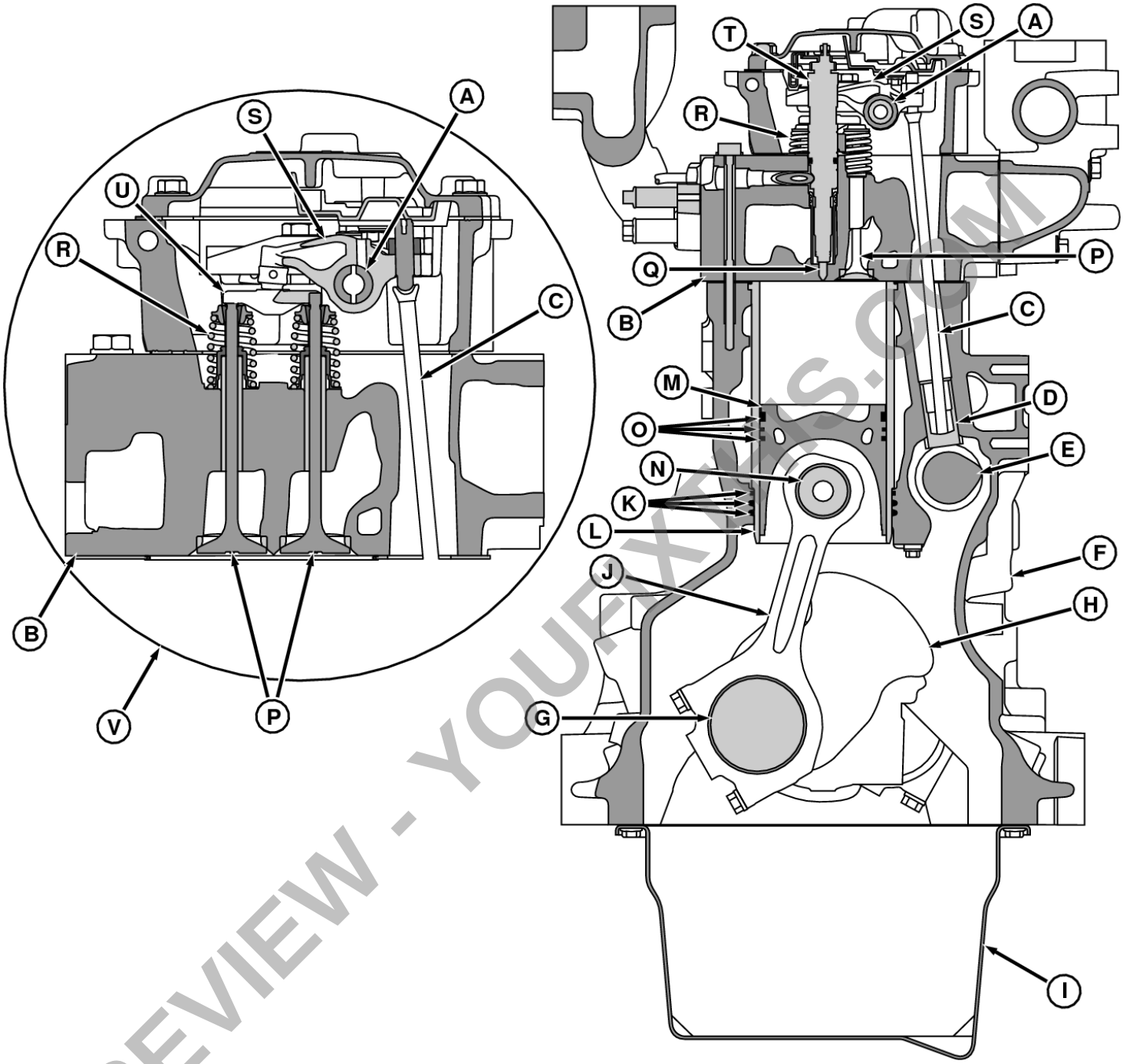

Sectional View IT4 6068

LEGEND:

A	Rocker Arm Shaft
B	Cylinder Head
C	Push Rod
D	Camshaft Follower
E	Camshaft
F	Cylinder Block
G	Connecting Rod Bearing
H	Crankshaft
I	Oil Pan
J	Connecting Rod
K	Cylinder Liner-to-Cylinder Block Packings
L	Cylinder Liner
M	Piston
N	Piston Pin

PREVIEW - YOUFIXTHIS.COM

Download full manual at youfixthis.com

Group 150 - Observable Diagnostics and Tests

Abnormal Engine Noise

297 df22281c-ed24-435f-a87c-35aecc6027b1

Symptom	Problem	Solution
Upper Engine Noise	Worn timing gears or excess backlash	See Camshaft — Removal and Timing Gears — Check Backlash in Section 02, Group 050.
	Excessive valve clearance	See Valve — Clearance Adjustment in Section 02, Group 020.
	Worn camshaft	See Camshaft — Visual Inspection in Section 02, Group 050.
	Worn rocker arm shaft	Inspect Rocker Arm Shafts. See Rocker Arm Shaft — Tear Down and Rocker Arm Shaft Assembly — Inspect and Assemble in Section 02, Group 020.
	Worn Valve Guides	See Valve Guide — Measurement in Section 02, Group 020.
	Sticking Valves	See Valve — Cleaning and Inspection in Section 02, Group 020.
	Damaged Valve Retainers, Retainer Locks, or Bridges	See Valve Retainer, Valve Bridges, and Valve Retainer Locks — Inspection in Section 02, Group 020.
	Loose or Worn Rocker Arms	See Rocker Arm Shaft Assembly — Inspect and Assemble in Section 02, Group 020.
	Bent Pushrods	See Push Rod — Cleaning and Inspection in Section 02, Group 020.
	Broken Valve Springs	See Valve Springs — Inspection in Section 02, Group 020.
	Turbo noise (whining)	Check for possible leaks in air intake and exhaust system such as ruptured seals and loose clamps.
Lower Engine Noise	Worn connecting rod bushings and piston pins	See Piston Pin and Bushing — Inspection in Section 02, Group 030.
	Worn main or connecting rod bearings	Determine bearing clearance. See Cylinder Block, Liners, Pistons, and Rods Specifications in Section 06, Group 200 or Crankshaft, Main Bearings, and Flywheel Specifications in Section 06, Group 200.
	Bent Connecting Rods	See Connecting Rod and Cap — Inspection in Section 02, Group 030.
	Scored Pistons	See Piston Pin and Bushing — Inspection in Section 02, Group 030.
	Excessive Crankshaft End Play	Check crankshaft end play. See Crankshaft — End Play Check in Section 02, Group 040.
	Loose Flywheel	See Flywheel — Inspection in Section 02, Group 040.
	Oil Pump Oil Pickup Tube Loose	See Oil Pump and Tubes — Removal in Section 02, Group 060.
Engine Noise Under Load	Loose Flywheel	See Flywheel — Inspection in Section 02, Group 040.
	Excessive Piston-To-Liner Clearance	See Piston to Liner — Clearance Check in Section 02, Group 030.
	Excessive thrust bearing clearance	See Crankshaft Thrust Bearing — Inspection in Section 02, Group 040.
	Worn main or connecting rod bearings	Determine bearing clearance. See Cylinder Block, Liners, Pistons, and Rods Specifications in Section 06, Group 200 or Crankshaft, Main Bearings, and Flywheel Specifications in Section 06, Group 200.
Engine Noise at Initial Start-Up	Excessive Piston-To-Liner Clearance	See Piston to Liner — Clearance Check in Section 02, Group 030.
	High Oil Viscosity	Drain engine oil and refill with correct viscosity engine oil.
	Worn main or connecting rod bearings	Determine bearing clearance. See Cylinder Block, Liners, Pistons, and Rods Specifications in Section 06, Group 200 or Crankshaft, Main Bearings, and Flywheel Specifications in Section 06, Group 200.
Engine noise (pop) During Active Regeneration	Turbocharger surge at the speeds and loads encountered in a regeneration cause a pop noise	No solution, noise is normal.
Exhaust Leakage while Regeneration	Smoke from engine compartment only during active filter cleaning	Perform Service Regeneration through Service Advisor. Check all exhaust connections for leak.
Other Possible Causes of Abnormal Engine Noise	Engine Accessories	Check other application specific components that could cause abnormal engine noise such as air compressors or auxiliary drives and components.

Coolant in Oil or Oil in Coolant

297 df22281c-ed24-435f-a87c-35aecc6027b1

PREVIEW - YOUFIXTHIS.COM

Download full manual at youfixthis.com

Result:

YES: Repair problem. Perform Verification Procedure .

NO: GO TO 3

(3) Circuit Check

Action:

[1] - Connect Diagnostic Test Box :

- A to B5206 connector female socket 1 (+).
- B to B5206 connector female socket 2 (-).

[2] - Set S1 to position 7 on Diagnostic Test Box.

[3] - Connect multimeter to Diagnostic Test Box.

[4] - Ignition ON, Engine OFF.

[5] - Monitor voltage on multimeter.

[6] - Perform Wiggle Test .

Does voltage remain between 2.3 and 2.7 V?

Result:

YES: GO TO 4

NO:GO TO Short to Voltage Procedure .

(4) Software Check

Action:

In Service ADVISOR, monitor Manifold Air Temperature Input Voltage. *ECU datapoint - Manifold Air Temperature Input Voltage*

Is voltage between 2.3 and 2.7 V?

Result:

YES: GO TO 6

NO: GO TO 5

(5) Reprogram ECU

Action:

[1] - Reprogram ECU. For more information, see Engine Control Unit (ECU) — Reprogramming Instructions in Section 04, Group 160.

[2] - Ignition ON, Engine OFF.

PREVIEW - YOUFIXTHIS.COM

Download full manual at youfixthis.com

002791.05- EGR Valve Drive Circuit Fault

297 df22281c-ed24-435f-a87c-35aecc6027b1

The ECU has detected a fault on the EGR valve drive circuit.

Diagnostic Procedure

Troubleshooting Sequence:
002791.05

When DTC is Displayed:
When the ignition is on, engine is running, and the EGR valve is commanded to a position with the fault active.
When the ignition is on, during the Harness Diagnostic Mode Test with the fault active.

Related Information:
The ECU has detected that there is a fault on the EGR valve drive circuit.

Alarm Level:
Warning

Control Unit Response:
The ECU tries to maintain proper operating conditions.
The ECU uses a default value for EGR valve position.

Additional references:
For component location, see Y5400 — EGR Valve in Section 03, Group 140.
For more EGR valve information, see EGR Valve Operation in Section 03, Group 135.
For more information on the Wiggle Test, see Wiggle Test in Section 04, Group 155.
For more information on the Control Unit Information and Overview Test, see Control Unit Information and Overview Test in Section 04, Group 160.

→NOTE:

The wiring diagrams provided are for a typical John Deere supplied OEM harness. Wire number, colors, and jumper connectors do not apply to all applications.

For connector repair or complete wiring information:
- see Connector Repair Information Table
- see 6.8L Wiring Diagram 4
located in Section 06, Group 210.

PREVIEW - YOUFIXTHIS.COM

Download full manual at youfixthis.com

Group 170 - Repair Tools and Other Materials

75240

Coolant and Battery Refractometer

Coolant and Battery Refractometer

75240

Used to measure freezing point of either propylene or ethylene glycol-based cooling systems and to check the strength of electrolyte solution batteries.



75240

- Used to measure freezing point of either propylene or ethylene glycol-based cooling systems and to check the strength of electrolyte solution batteries.

D01168AA

Spring Compression Tester

Spring Compression Tester

D01168AA

Test valve spring compression and oil pressure regulating valve spring compression.

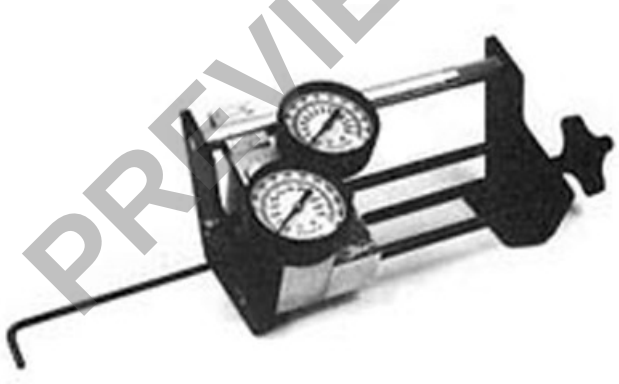

D01168AA

- Test valve spring compression.
- Test oil pressure regulating valve spring compression.

D01210AA

Puller, Slide hammer

PREVIEW - YOUFIXTHIS.COM

Download full manual at youfixthis.com

Foreword

This repair manual covers the 6068 PowerTech engines for Interim Tier 4/Stage III B platform.

This manual is written for an experienced technician. Essential tools required in performing certain service work are identified in this manual.

Live With Safety : Read the safety messages in the introduction of this manual and the cautions presented throughout the text of the manual.

CAUTION:

This is the safety-alert symbol. When you see this symbol on the machine or in this manual, be alert to the potential for personal injury.

Information in this manual is organized in sections and sub divided into groups.

Section 01 covers the safety measures to follow while repairing the engine; engine identification features, engine emission & application details, and information about the fuels, lubricants & coolants.

Section 02 covers the Repair and Adjustment procedures.

Section 03 explains Systems Theory of Operation.

Section 04 is the diagnostics section that provides troubleshooting procedures to find problems.

Section 05 lists all applicable service equipment and tools, other materials needed to do the job.

Section 06 details all specifications, wear tolerances, torque values and contains the wiring diagrams.

This manual contains SI Metric units of measure followed immediately by the U.S. customary units of measure. Most hardware on these engines is metric sized.

Read each block of material completely before performing service to check for differences in procedures or specifications. Follow only the procedures that apply to the component you are working on.

Component Technical Manuals are concise service guides for specific components. Component technical manuals are written as stand-alone manuals covering multiple machine applications.

Fundamental service information is available from other sources covering basic theory of operation, fundamentals of troubleshooting, general maintenance, and basic type of failures and their causes.

CALIFORNIA PROPOSITION 65 WARNING
Diesel engine exhaust and some of its constituents are known to the State of California to cause cancer, birth defects and other reproductive harm.

PREVIEW - YOUFIXTHIS.COM

Download full manual at youfixthis.com

Special Tools:
• D01168AA —Spring Compression Tester

Consumables:
• None

→NOTE:

Free spring length of 51.1 mm (2.01 in.) springs differ slightly, but compressed height must be the same.

Check valve spring tension using D01168AA Spring Compression Tester.

Spring Compression Tester

D01168AA

Test valve spring compression.

Item	Measurement	Specification
Valve Spring Tension	At 28.1 mm (1.11 in.) Compressed Height (Valve Open)	471 — 519N (105.88—116.68 lb-force)
Valve Spring Tension	At 39.3 mm (1.51 in.) Compressed Height (Valve Close)	248 — 272N (55.75—61.15 lb-force)

PREVIEW - YOUFIXTHIS.COM

Download full manual at youfixthis.com

Timing Gear Cover — Removal

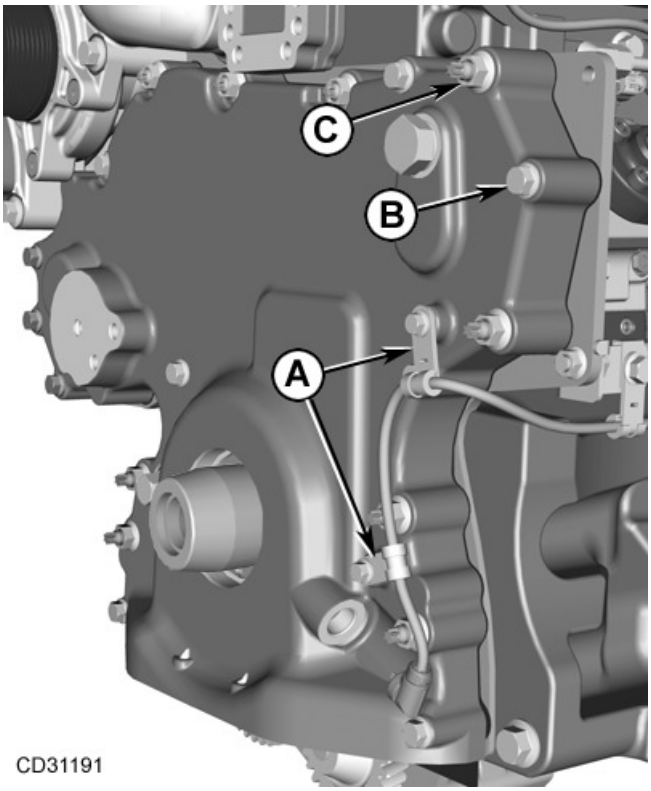

LEGEND:
A Wiring Harness Clamps
B Timing Gear Cover Cap Screws
C Timing Gear Cover Nuts
D Rear Cap Screws (Engine With Auxiliary Drive Option)

Remove Timing Gear Cover

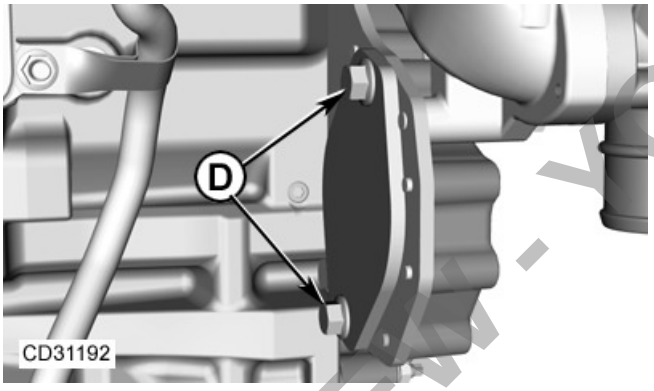

Remove Rear Cap Screw (Engine With Auxiliary Drive Option)

Special Tools:

- JDG11206 — Front Crankshaft Oil Seal Puller

[1] - Perform Crankshaft Front Oil Seal — Removal .

[2] - If necessary, perform Fan Drive Assembly — Removal .

[3] - Perform Belt Tensioner — Removal .

[4] - Perform Coolant pump Assembly — Removal .

[5] - Perform Crankshaft Position Sensor — Removal .

PREVIEW - YOUFIXTHIS.COM

Download full manual at youfixthis.com

[5] - Install cap screws (E) and nuts (F). Hand tighten at this stage.

[6] - Install marmon clamp (G) and tighten to specification.

Item	Measurement	Specification
Marmon clamp between interstage gas tube and turbocharger	Torque	8 N·m (7 lb-ft.)

[7] - Tighten cap screws (E) and nuts (F) to specification.

Item	Measurement	Specification
Turbocharger (VGT)-to-exhaust manifold	Torque	70 N·m (52 lb-ft.)

[8] -

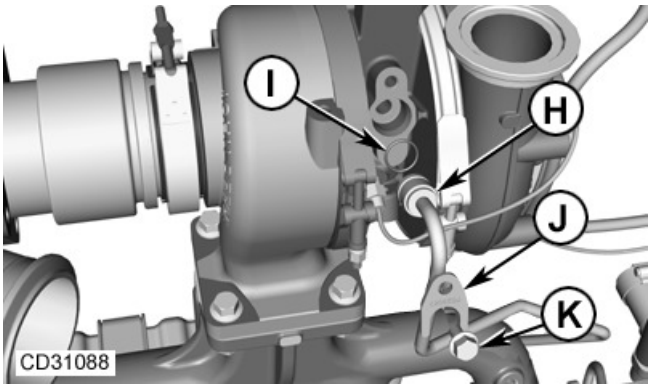

LEGEND:

H	Oil Supply Line
I	O-ring
J	Clamp
K	Cap Screw
L	Oil Drain line
M	Gasket
N	Cap Screws

Oil Supply Line Installation

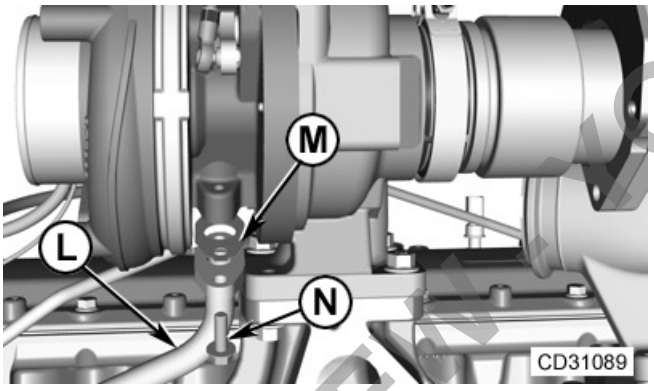

Oil Drain Line Installation

Reconnect oil supply line (H). Replace O-ring (I) if needed.

[9] - Install clamp (J) then tighten cap screw (K) to specification.

Item	Measurement	Specification
Oil supply line clamp-to-turbocharger	Torque	25 N·m (18 lb-ft.)

[10] - Reconnect oil drain line (L) with a new gasket (M).

[11] - Install cap screws (N) and tighten to specification.

Item	Measurement	Specification
Oil drain line-to-turbocharger	Torque	25 N·m (18 lb-ft.)

[12] -

PREVIEW - YOUFIXTHIS.COM

Download full manual at youfixthis.com

Installation of Repair Wire Assembly (RWA)

→NOTE:

There are two types of installation procedures:

- **Method 1—RWA is the same gauge as the wire being repaired**
- **Method 2—RWA is a different gauge than the wire being repaired**

Install Repair Wire Assembly (RWA)—Method 1

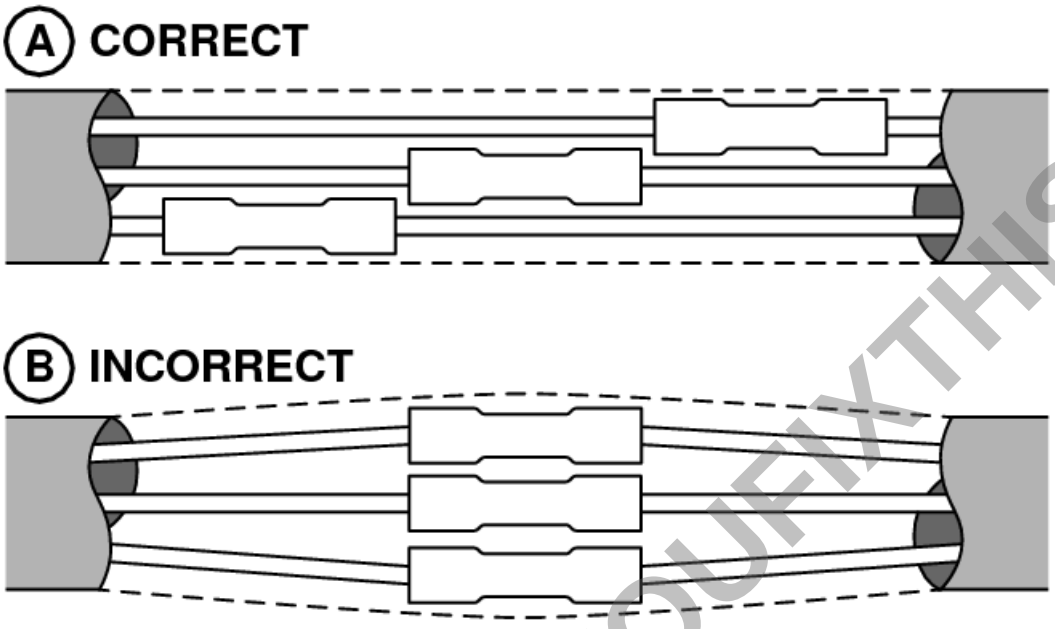

Splice Location

LEGEND:

A	Correct
B	Incorrect

[1] - See your machine parts catalog for the correct RWA for the connector to be repaired.

[2] -

IMPORTANT:

Ensure that there is adequate room for the splice in the area of the harness where the repair will be installed.

Ensure the area of the harness where the splice will be installed is clean. Cut the wire on the harness and the RWA to the desired length.

IMPORTANT:

If multiple RWAs are being used make sure to stagger the splices (A) so that they do not over lap each other (B).

[3] -

PREVIEW - YOUFIXTHIS.COM

Download full manual at youfixthis.com

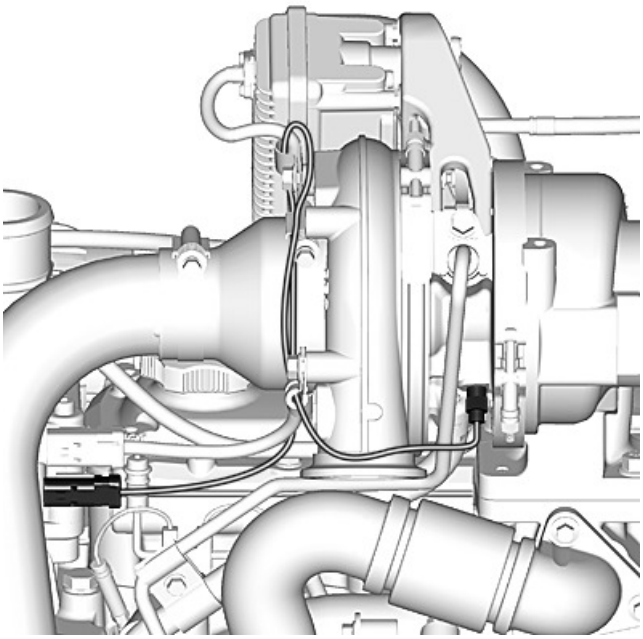

B5300 Image

It is an inductive type pickup sensor that uses a flat spot on the shaft to measure turbocharger speed. The ECU monitors turbocharger speed to ensure that the turbocharger is running within acceptable range. At most severe high turbocharger speed levels, the ECU uses this sensor for engine protection. The ECU estimates manifold air pressure using this measurement.

For more information on how speed sensors operate, see Measuring Speed in Section 03, Group 140.

For more information on engine protection and derate programs, see Engine Derate and Shutdown Protection in Section 03, Group 140.

PREVIEW - YOUFIXTHIS.COM

Download full manual at youfixthis.com

4. **Troubleshoot Identified Controller**
   - Ignition OFF, Engine OFF.
   - Troubleshoot identified controller using applicable application technical manual.
   - Ignition ON, Engine OFF.
   - Refresh codes.

   Is DTC that sent you here active?
   Yes: GO TO 5
   No: Problem resolved. Perform Verification Procedure .
5. **Replace ECU**
   - Ignition OFF, Engine OFF.
   - Replace ECU programmed with identical software that was in the removed ECU.
   - Ignition ON, Engine OFF.
   - Refresh codes.

   Is DTC that sent you here active?
   Yes: Contact DTAC for support.
   No: Problem resolved. Perform Verification Procedure .

PREVIEW - YOUFIXTHIS.COM

- No continuity, go to step c.

c. Load (H) is shorted directly to ground. Inspect and replace as required.
   - Perform an operational check-out on the component after completing the repair.

[4] -

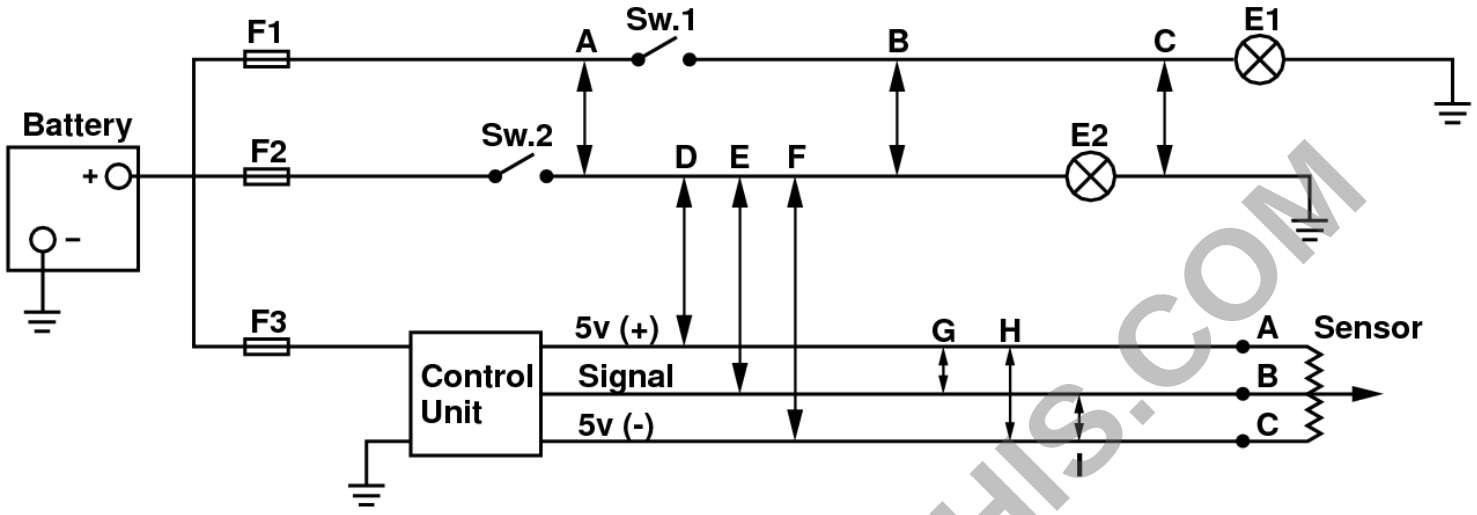

Shorted Circuit

Shorted Circuit:

Machines equipped with several electronic control devices contain wiring harnesses that can become shorted by one of the following ways shown above.

1. Battery wire from fuse (F1) is shorted at (A) to another battery wire after switch (Sw.2).
   - Result: Lamp (E2) is on all of the time.
2. Battery wire from fuse (F1) is shorted at (B) to another battery wire after switches (Sw.1 and 2).
   - Result: Both lamps (E1 and E2) operate on either switch (Sw. 1 or 2).
3. Battery wire from fuse (F1) is shorted at (C) to a ground wire.
   - Result: Fuse (F1) opens after closing switch (Sw. 1)
4. Battery wire from switch (Sw. 2) is shorted at (D) to a regulated voltage wire.
   - Result: The sensor signal voltage is distorted.
     [The sensor signal voltage goes out of range and a fault code may be stored. The control unit may shut down or provide limited operation for its function.]
5. Battery wire from switch (Sw. 2) is shorted at (E) to the sensor signal voltage wire.
   - Result: The sensor signal is distorted.
     [The sensor signal voltage goes out of range and a fault code may be stored. The control unit may shut down or provide limited operation for its function.]
6. Battery wire from switch (Sw. 2) is shorted at (F) to the sensor ground wire.
   - Result: Fuse (F2) opens after closing switch (Sw. 2) and the sensor signal is distorted.
     [The sensor signal voltage goes out of range and a fault code may be stored. The control unit may shut down or provide limited operation for its function.]
7. Controller regulated voltage wire is shorted at (G) to the sensor signal voltage wire.
   - Result: The sensor signal is distorted.
8. Controller regulated voltage wire is shorted at (H) to the sensor ground wire.
   - Result: The sensor signal is distorted.
     [The sensor signal voltage goes out of range and a fault code may be stored. The control unit may shut down or provide limited operation for its function.]
9. Sensor voltage wire is shorted at (I) to the sensor ground wire.
   - Result: The sensor signal is distorted.
     [The sensor signal voltage goes out of range and a fault code may be stored. The control unit may shut down or provide limited operation for its function.]

Do the following to isolate a “Shorted Circuit:”

a. Review the machine electrical schematic to identify the circuits for the component that does not operate.

b. Disconnect the components at each end of the circuits, to single out the affected wires.

c. Terminal damage occurs if anything other than the specified flex probe from JDG10466 Flex Probe Kit is used. DO NOT force meter probes into connector terminals.

d. Connect the meter leads across two of the affected circuits. The meter should show no continuity between the two circuits. Repeat the check across another combination of two circuits until all affected circuits have been checked.

e. Then, connect a meter lead to each affected circuit one at a time and touch the other meter leads to all terminals in the

PREVIEW - YOUFIXTHIS.COM

Download full manual at youfixthis.com

[3] - With Diagnostic Test Box still connected and S1 in position 7, in Service ADVISOR, monitor Manifold Air Temperature Input Voltage. *ECU datapoint - Manifold Air Temperature Input Voltage*

Is voltage between 2.3 and 2.7 V?

Result:

YES: Perform Verification Procedure .

NO: Replace ECU. Perform Verification Procedure .

(6) Replace Sensor

Action:

[1] - Replace Manifold Air Temperature sensor.

[2] - If possible, run engine under operating conditions that set code.

[3] - Refresh codes.

Did DTC 000105.00 reappear?

Result:

YES: Investigate other potential mechanical problems:• Internal Charge Air Cooler Plugging• VGT vanes sticking• Plugged EGR circuit• Boost leak• EGR system leak• Exhaust leak• EGR flow sensor low• Air throttle restriction• Exhaust restriction• Damaged turbocharger• VGT vane position sensor inaccurate• Valve clearance adjustment incorrect• Damaged valve seat(s)

NO: Perform Verification Procedure .

PREVIEW - YOUFIXTHIS.COM

Download full manual at youfixthis.com

- JDG10460 — Female — Yellow/Purple
- JDG10461 — Male — Yellow/Purple

Tools:
- JDG10273 — Diagnostic Test Box
- JT07306 — Digital Multimeter
- J-35616-20 – Test Leads

(1) Read DTCs and Store Snapshot Information

Action:

[1] - Connect Service ADVISOR, see Connecting to Service ADVISOR in Section 04, Group 160.

→NOTE:

When DTCs are cleared, Snapshot Information for ALL DTCs is cleared.

[2] - Ignition ON, Engine OFF.

[3] - If any DTCs have snapshot capture or snapshot recording information, save the information. For instructions on saving and using snapshot information, see Snapshot Instructions in Section 04, Group 160.

[4] - In Service ADVISOR perform Control Unit Information and Overview Test.

ECU test - Control Unit Information and Overview .

[5] - Refresh codes.

Is DTC 005126.03 stored?

Result:

YES:GO TO 005126.03 — Sensor Supply #8 Voltage Out of Range High procedure.

NO: GO TO 2

(2) Code Check

Action:

Is DTC 000100.03 stored?

Result:

YES:GO TO 000100.03 — Engine Oil Pressure Signal Out of Range High procedure.

NO: GO TO 3

(3) Code Check

Action:

Is DTC 000100.04 active?

PREVIEW - YOUFIXTHIS.COM

Download full manual at youfixthis.com

Is resistance less than 100k ohms?

Result:

YES: Repair short to signal wire in harness. GO TO 17

NO: GO TO 13

(13) Continuity Check

Action:

Measure resistance between A5502 connector female socket 8 and B5100 connector female socket 2.

Is resistance less than 5 ohms?

Result:

YES:GO TO Problem Not Found Procedure .

NO: Repair mis-pin in harness. GO TO 17

(14) Circuit Check

Action:

[1] - In Service ADVISOR, monitor Fuel Rail Pressure Input Voltage. *ECU datapoint - Fuel Rail Pressure Input Voltage*

[2] - Perform Wiggle Test .

Does voltage ever go below 0.2 V?

Result:

YES: Repair harness problem. GO TO 17

NO: GO TO 15

(15) Terminal Check

Action:

[1] - Ignition OFF, Engine OFF.

[2] - Disconnect fuel rail pressure sensor connector B5100.

[3] - Perform Terminal Test on sensor and B5100 connector.

Were any problems found?

Result:

YES: Repair problem. GO TO 17

NO: GO TO 16

PREVIEW - YOUFIXTHIS.COM

Download full manual at youfixthis.com

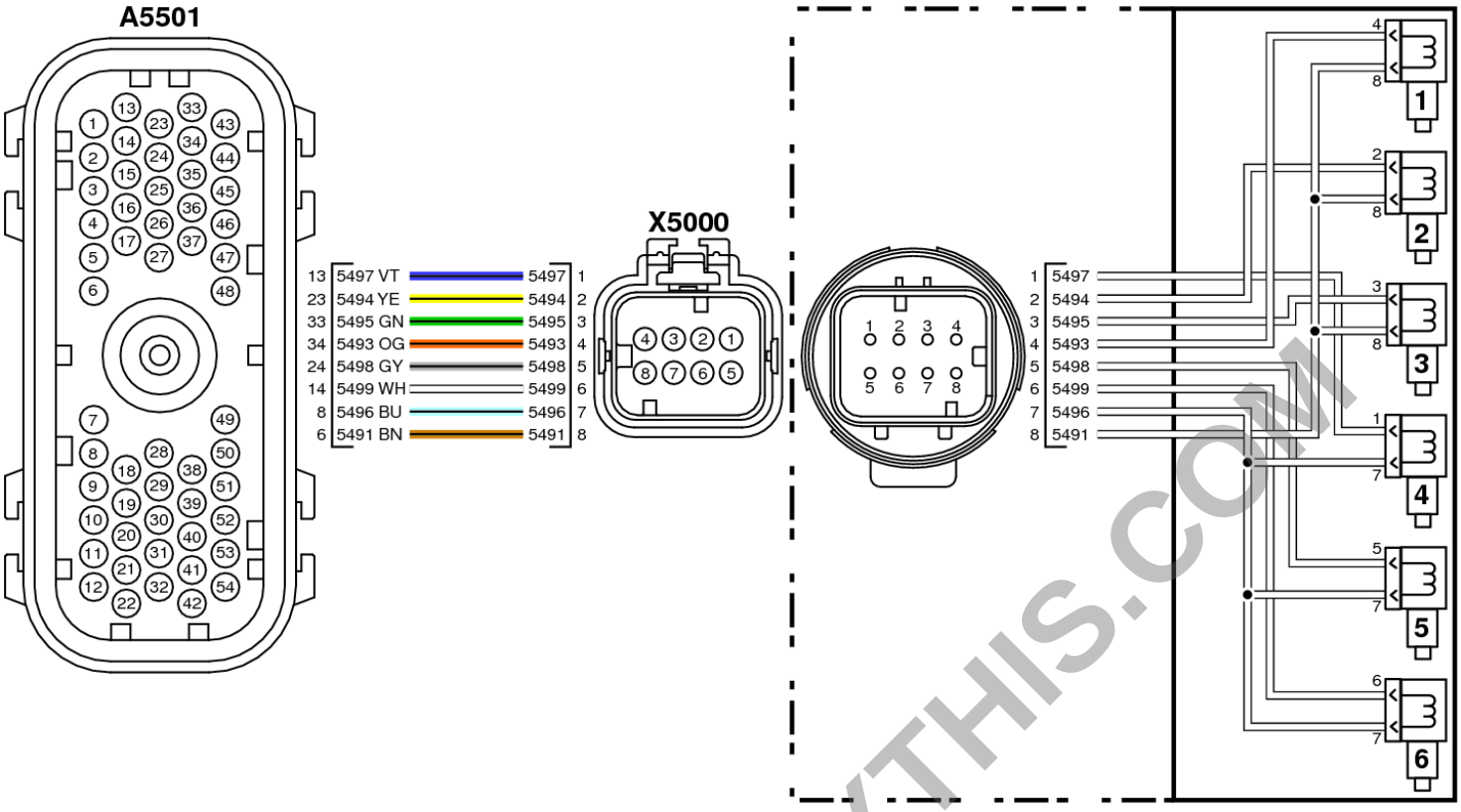

Injector #5 Circuit

LEGEND:

A5501 – 34	Injector #1 Return
A5501 – 6	Injector #1 Supply
A5501 – 23	Injector #2 Return
A5501 – 6	Injector #2 Supply
A5501 – 33	Injector #3 Return
A5501 – 6	Injector #3 Supply
A5501 – 13	Injector #4 Return
A5501 – 8	Injector #4 Supply
A5501 – 24	Injector #5 Return
A5501 – 8	Injector #5 Supply
A5501 – 14	Injector #6 Return
A5501 – 8	Injector #6 Supply

IMPORTANT:

Terminal damage occurs if anything other than the specified flex probe from JDG10466 Flex Probe Kit is used.

Flex probes:
Sensor
- JDG10460 — Female — Yellow/Purple
- JDG10461 — Male — Yellow/Purple

ECU
- JDG10460 — Female — Yellow/Purple
- JDG10461 — Male — Yellow/Purple

Tools:
- JT07306 — Digital Multimeter
- J-35616-20 – Test Leads

(1) Read DTCs and Store Snapshot Information

PREVIEW - YOUFIXTHIS.COM

Download full manual at youfixthis.com

Is multimeter reading within 0.2 V of battery voltage?

Result:

YES: GO TO 8

NO: GO TO 7

(7) Open or High Resistance Circuit Check

Action:

[1] - Press and hold both S2 and S3 buttons on Diagnostic Test Box.

[2] - Monitor voltage on multimeter.

Is multimeter reading within 0.2 V of battery voltage?

Result:

YES: Repair open or high resistance in ground wire. Perform Verification Procedure .

NO: Repair open or high resistance in power wire. Perform Verification Procedure .

(8) Power Circuit Check

Action:

[1] - Connect Diagnostic Test Box :

- A to A5503 connector female socket 23 (+).
- B to A5503 connector female socket 44 (-).

[2] - Set S1 to position 1 on Diagnostic Test Box.

[3] - Connect multimeter to Diagnostic Test Box.

[4] - Press and hold S3 on Diagnostic Test Box.

[5] - Monitor voltage on multimeter.

[6] - Perform Wiggle Test .

Is multimeter reading within 0.2 V of battery voltage?

Result:

YES: GO TO 10

NO: GO TO 9

(9) Open or High Resistance Circuit Check

PREVIEW - YOUFIXTHIS.COM

Download full manual at youfixthis.com

Result:

YES: Perform steps found in DTAC solution. Perform Verification Procedure .

NO: GO TO 43

(43) ECU Reprogram

Action:

Search Custom Performance for possible ECU software updates.

Is there a new version of software available?

Result:

YES: Reprogram ECU with new version of software. Perform Verification Procedure .

NO: Contact DTAC for support.

PREVIEW - YOUFIXTHIS.COM

Download full manual at youfixthis.com

Result:

YES: Repair high resistance in return wire. Perform Aftertreatment Verification Procedure .

NO: GO TO 14

(14) Terminal Check

Action:

[1] - Ignition OFF, Engine OFF.

[2] - Disconnect ECU connector A5502.

[3] - Perform Terminal Test on A5502 connector female sockets 25 and 11. And corresponding ECU male pins.

Were any problems found?

Result:

YES: Repair problem. Perform Aftertreatment Verification Procedure .

NO: GO TO 15

(15) Signal Circuit Continuity Check

Action:

Measure the resistance between A5502 connector female socket 11 and B5000 connector female socket 4.

Is resistance measurement less than 5 ohms?

Result:

YES: GO TO 16

NO: Repair problem. Perform Aftertreatment Verification Procedure .

(16) Wire to Wire Short Check

Action:

[1] - Disconnect battery.

[2] - On the harness, measure resistance between A5502 connector female socket 11 to all other terminals in ECU connector A5502.

Are any measurements less than 100k ohms?

Result:

YES: Repair short to signal wire. Perform Aftertreatment Verification Procedure .

NO: GO TO 17

(17) Wire to Wire Short Check

PREVIEW - YOUFIXTHIS.COM

Download full manual at youfixthis.com

Result:

YES: Repair problem. Perform Aftertreatment Verification Procedure .

NO:GO TO Problem Not Found Procedure . If you replace the fuel dosing unit, in Service ADVISOR, perform Service Regeneration. *ECU test - Service Regeneration*

PREVIEW - YOUFIXTHIS.COM

Download full manual at youfixthis.com

The ECU received an error message from another control unit.

Diagnostic Procedure

See CAN Message Received Error in Section 04, Group 155.

002157.09- No CAN Message Received From Source Address 157

297 df22281c-ed24-435f-a87c-35aecc6027b1

The ECU did not receive a CAN message from another control unit.

Diagnostic Procedure

See CAN Message Not Received in Section 04, Group 155.

002157.14- Incorrect CAN Message Received From Source Address 157

297 df22281c-ed24-435f-a87c-35aecc6027b1

The ECU received an incorrect CAN message from another control unit.

Diagnostic Procedure

See CAN Message Received Is Incorrect in Section 04, Group 155.

002157.19- Communication Error with Source Address 157

297 df22281c-ed24-435f-a87c-35aecc6027b1

The ECU received an error message from another control unit.

Diagnostic Procedure

See CAN Message Received Error in Section 04, Group 155.

002158.09- No CAN Message Received From Source Address 158

297 df22281c-ed24-435f-a87c-35aecc6027b1

The ECU did not receive a CAN message from another control unit.

Diagnostic Procedure

See CAN Message Not Received in Section 04, Group 155.

002158.14- Incorrect CAN Message Received From Source Address 158

297 df22281c-ed24-435f-a87c-35aecc6027b1

The ECU received an incorrect CAN message from another control unit.

Diagnostic Procedure

See CAN Message Received Is Incorrect in Section 04, Group 155.

002158.19- Communication Error with Source Address 158

297 df22281c-ed24-435f-a87c-35aecc6027b1

The ECU received an error message from another control unit.

Diagnostic Procedure

See CAN Message Received Error in Section 04, Group 155.

002159.09- No CAN Message Received From Source Address 159

297 df22281c-ed24-435f-a87c-35aecc6027b1

The ECU did not receive a CAN message from another control unit.

Diagnostic Procedure

See CAN Message Not Received in Section 04, Group 155.

002159.14- Incorrect CAN Message Received From Source Address 159

297 df22281c-ed24-435f-a87c-35aecc6027b1

The ECU received an incorrect CAN message from another control unit.

Diagnostic Procedure

PREVIEW - YOUFIXTHIS.COM

Download full manual at youfixthis.com

PREVIEW ONLY

You're viewing 24 of 2704 pages

The full manual includes:

- All 2704 pages, complete
- Searchable PDF (find any keyword)
- No watermarks
- Instant download
- Print-ready quality

GET FULL MANUAL NOW

John Deere PowerTech 6068 (6068HFC95, 6068HFG95) Component Technical Manual



Scan or click anywhere
youfixthis.com

Click anywhere on this page to get the full manual