ELECTRICAL SCHEMATIC

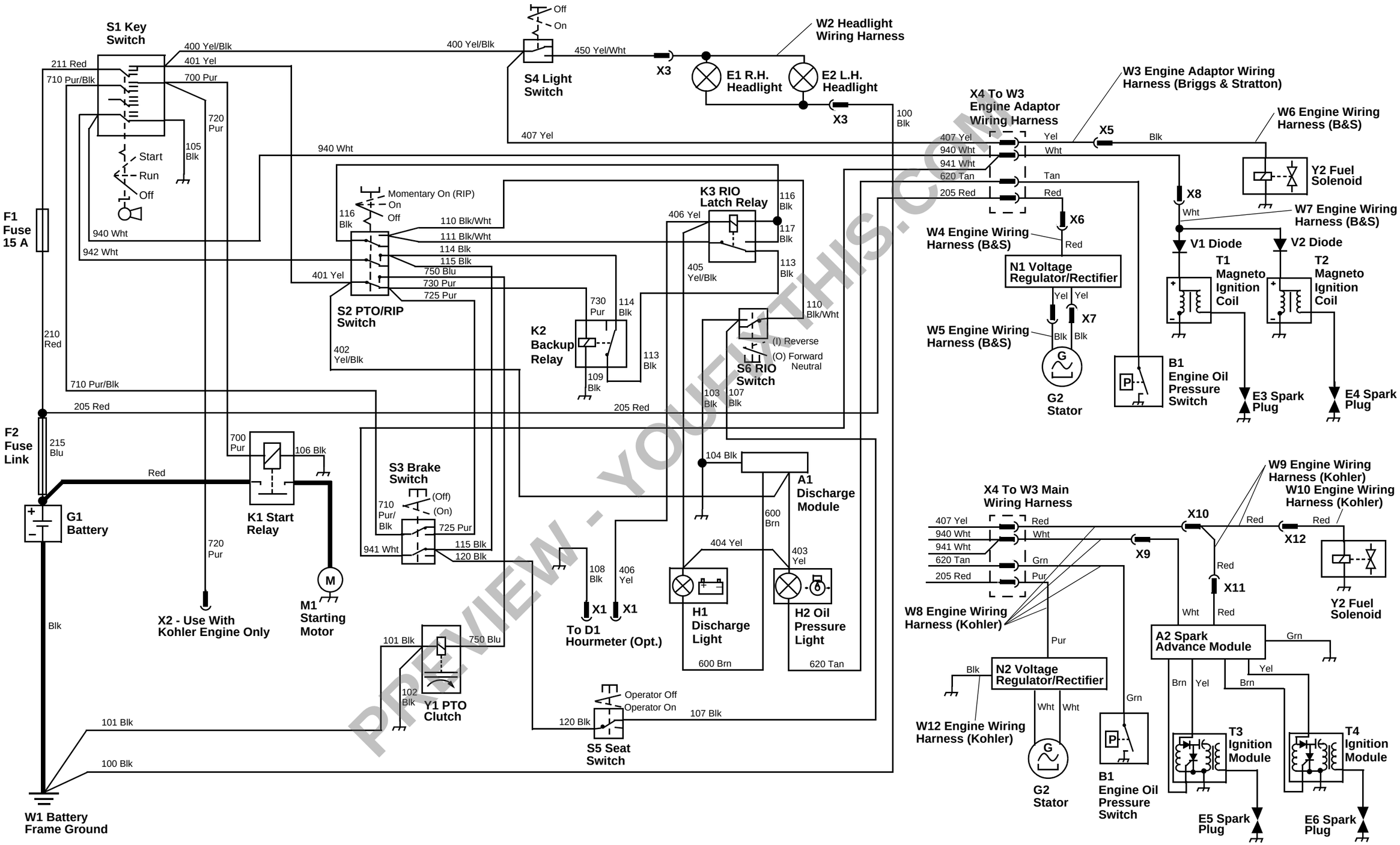

PREVIEW - YOUFIXTHIS.COM

SE1 - STARTING	SE2 - IGNITION	SE3 - CHARGING	SE4 - ENGINE

YouFixThis.com
Download full manual at youfixthis.com

HYDROSTATIC SYSTEM OPERATION

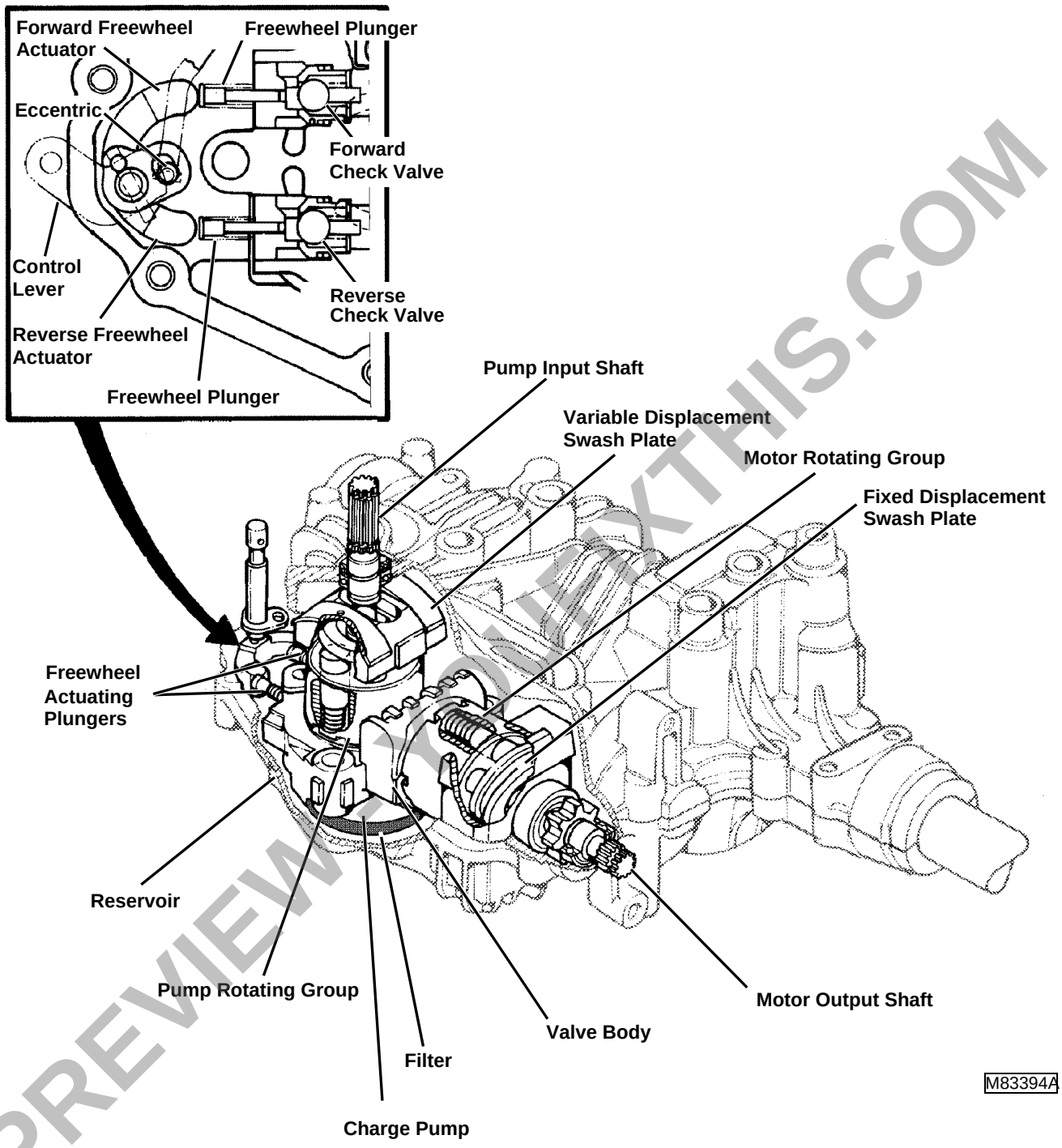

PREVIEW ONLY FIXTHIS.COM

Download full manual at youfixthis.com

COMPONENT LOCATION

K65 TRANSAXLE COMPONENTS

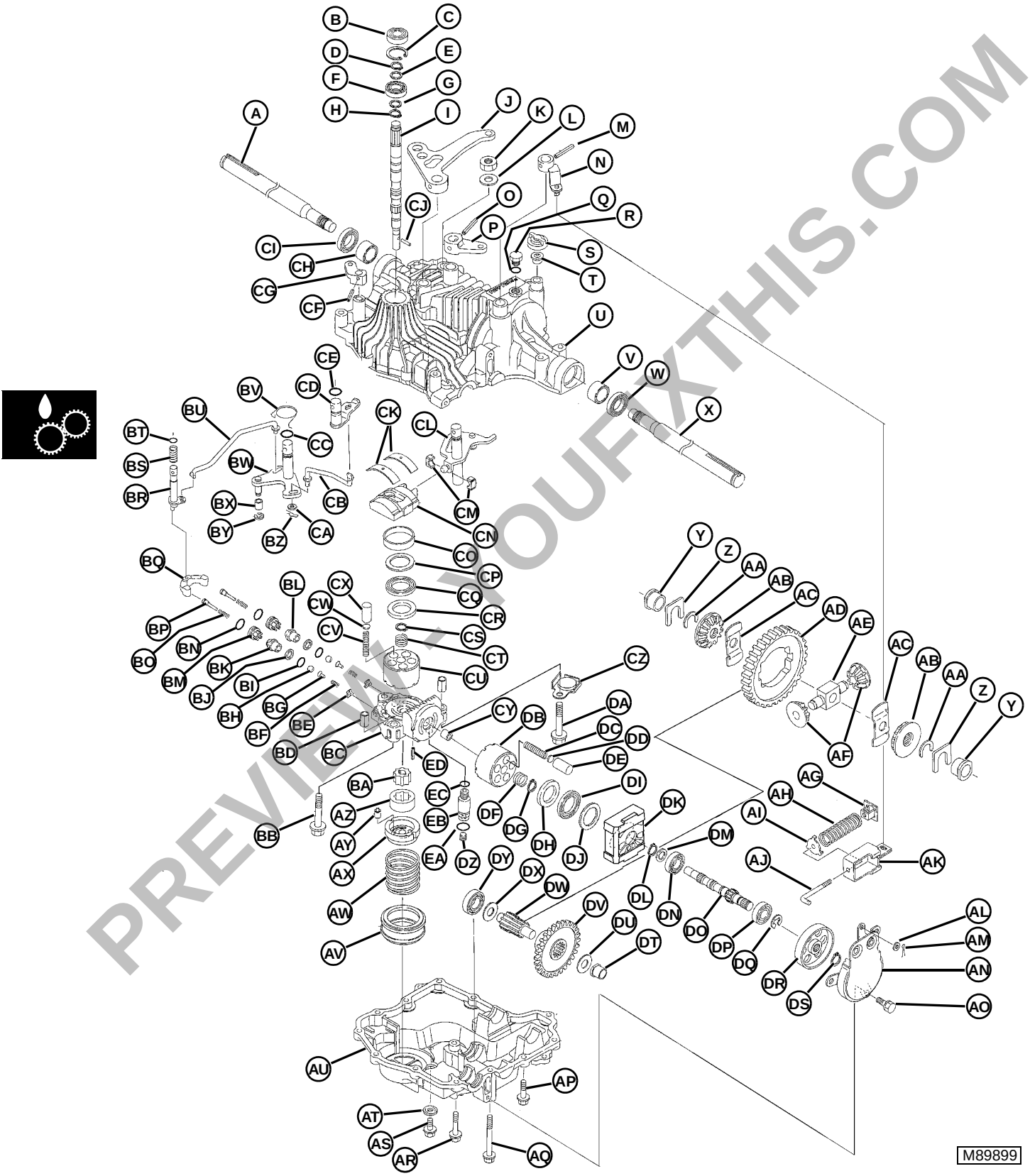

PREVIEW FROM YOUFIXTHIS.COM

Download full manual at youfixthis.com

METRIC FASTENER TORQUE VALUES

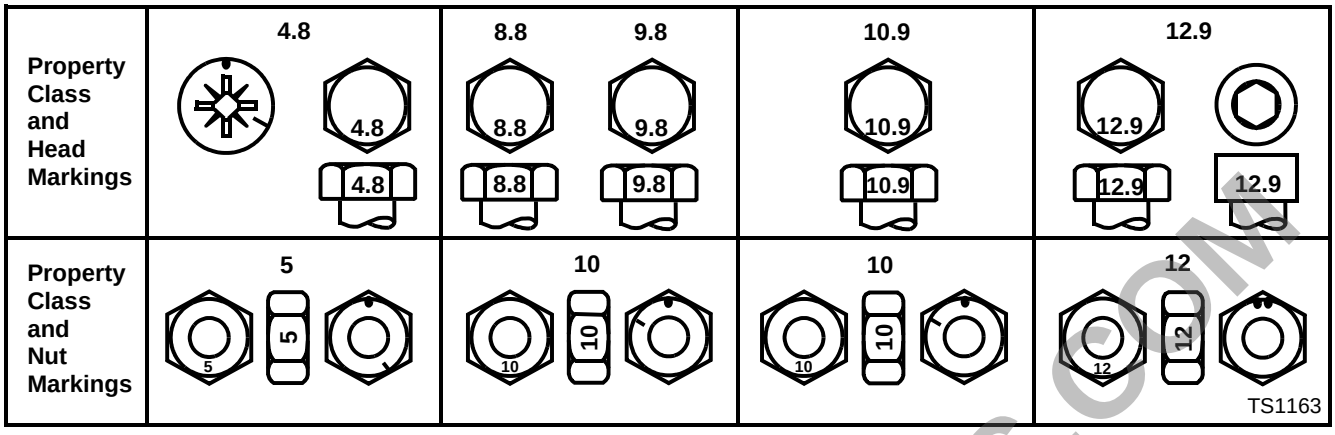

	Class 4.8				Class 8.8 or 9.8				Class 10.9				Class 12.9			
	Lubricated[a]		Dry[a]		Lubricated[a]		Dry[a]		Lubricated[a]		Dry[a]		Lubricated[a]		Dry[a]	
SIZE	N•m	lb-ft	N•m	lb-ft	N•m	lb-ft	N•m	lb-ft	N•m	lb-ft	N•m	lb-ft	N•m	lb-ft	N•m	lb-ft
M6	4.8	3.5	6	4.5	9	6.5	11	8.5	13	9.5	17	12	15	11.5	19	14.5
M8	12	8.5	15	11	22	16	28	20	32	24	40	30	37	28	47	35
M10	23	17	29	21	43	32	55	40	63	47	80	60	75	55	95	70
M12	40	29	50	37	75	55	95	70	110	80	140	105	130	95	165	120
M14	63	47	80	60	120	88	150	110	175	130	225	165	205	150	260	109
M16	100	73	125	92	190	140	240	175	275	200	350	225	320	240	400	300
M18	135	100	175	125	260	195	330	250	375	275	475	350	440	325	560	410
M20	190	140	240	180	375	275	475	350	530	400	675	500	625	460	800	580
M22	260	190	330	250	510	375	650	475	725	540	925	675	850	625	1075	800
M24	330	250	425	310	650	475	825	600	925	675	1150	850	1075	800	1350	1000
M27	490	360	625	450	950	700	1200	875	1350	1000	1700	1250	1600	1150	2000	1500
M30	675	490	850	625	1300	950	1650	1200	1850	1350	2300	1700	2150	1600	2700	2000
M33	900	675	1150	850	1750	1300	2200	1650	2500	1850	3150	2350	2900	2150	3700	2750
M36	1150	850	1450	1075	2250	1650	2850	2100	3200	2350	4050	3000	3750	2750	4750	3500

DO NOT use these hand torque values if a different torque value or tightening procedure is given for a specific application. Torque values listed are for general use only and include a ±10% variance factor. Check tightness of fasteners periodically. DO NOT use air powered wrenches.

Shear bolts are designed to fail under predetermined loads. Always replace shear bolts with identical grade.

Fasteners should be replaced with the same class. Make sure fastener threads are clean and that you properly start thread engagement. This will prevent them from failing when tightening.

When bolt and nut combination fasteners are used, torque values should be applied to the **NUT** instead of the bolt head.

Tighten toothed or serrated-type lock nuts to the full torque value.

[a] *"Lubricated" means coated with a lubricant such as engine oil, or fasteners with phosphate and oil coatings. "Dry" means plain or zinc plated (yellow dichromate - Specification JDS117) without any lubrication.*

Reference: JDS—G200.

PREVIEW - YOUFIXTHIS.COM

Download full manual at youfixthis.com

CARBURETOR ADJUSTMENT

Reason:

To set the carburetor mixture screws for proper operation of the carburetor.

ATTENTION!

DO NOT attempt to disassemble or adjust the engine CARB/EPA Certified Emissions Carburetor unless you are a factory trained technician with authorization to service CARB/EPA Certified Emissions Carburetors.

Equipment:

- Pulse Tachometer # JT07270

IMPORTANT: In order to obtain correct operation of the carburetor, the adjustment procedure must be performed in the sequence shown.

INITIAL ADJUSTMENT

Procedure:

1. Remove air cleaner assembly, and base. (See “AIR CLEANER REMOVAL AND INSTALLATION” on page 19.)

NOTE: Nuts securing air cleaner base to carburetor also secure carburetor to intake manifold. DO NOT run engine with nuts removed.

2. Install nuts on carburetor studs.
3. Remove limiter cap.
4. Turn idle mixture screw clockwise until it just seats. DO NOT FORCE.
5. Turn screw 1 ¼ turns counter-clockwise. This setting will allow the engine to start.

FINAL ADJUSTMENT

NOTE: All carburetor adjustments with engine running must be made with the air cleaner installed.

6. Install air cleaner base and air cleaner.
7. Start and run engine for 5 minutes to allow engine to reach operating temperature.
8. Move throttle lever to SLOW idle position.

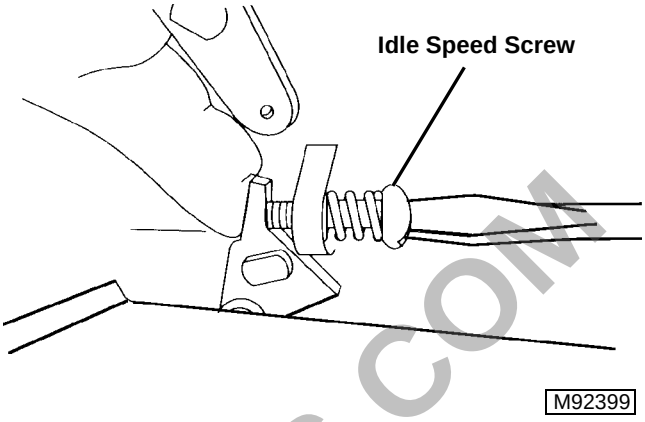

9. Install pulse tachometer.
10. Hold throttle lever against idle speed screw and temporarily adjust idle speed to 1400 rpm.

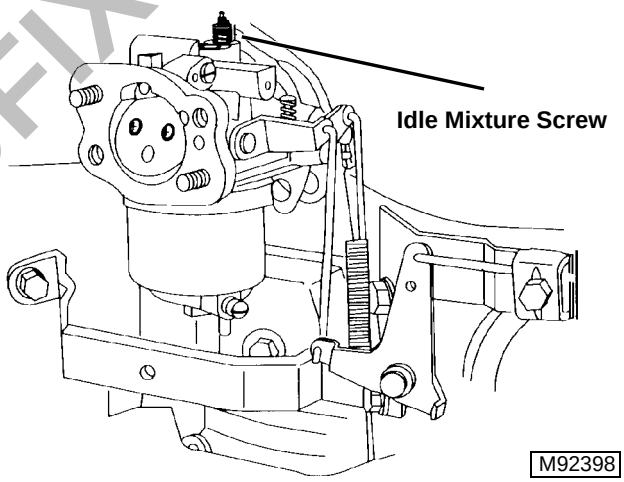

11. Turn idle mixture screw slowly clockwise until engine speed just starts to slow (Lean Mixture).
12. Turn idle mixture screw slowly counter-clockwise until engine speed just starts to slow (Rich Mixture).
13. Turn screw to the midpoint between rich and lean settings.
14. Hold throttle lever against idle speed adjustment screw and readjust idle speed to **1200 rpm**.
15. Release throttle lever and note rpm.

PREVIEW - YOUFIXTHIS.COM

Download full manual at youfixthis.com

THEORY OF OPERATION

DRIVE SYSTEM OPERATION

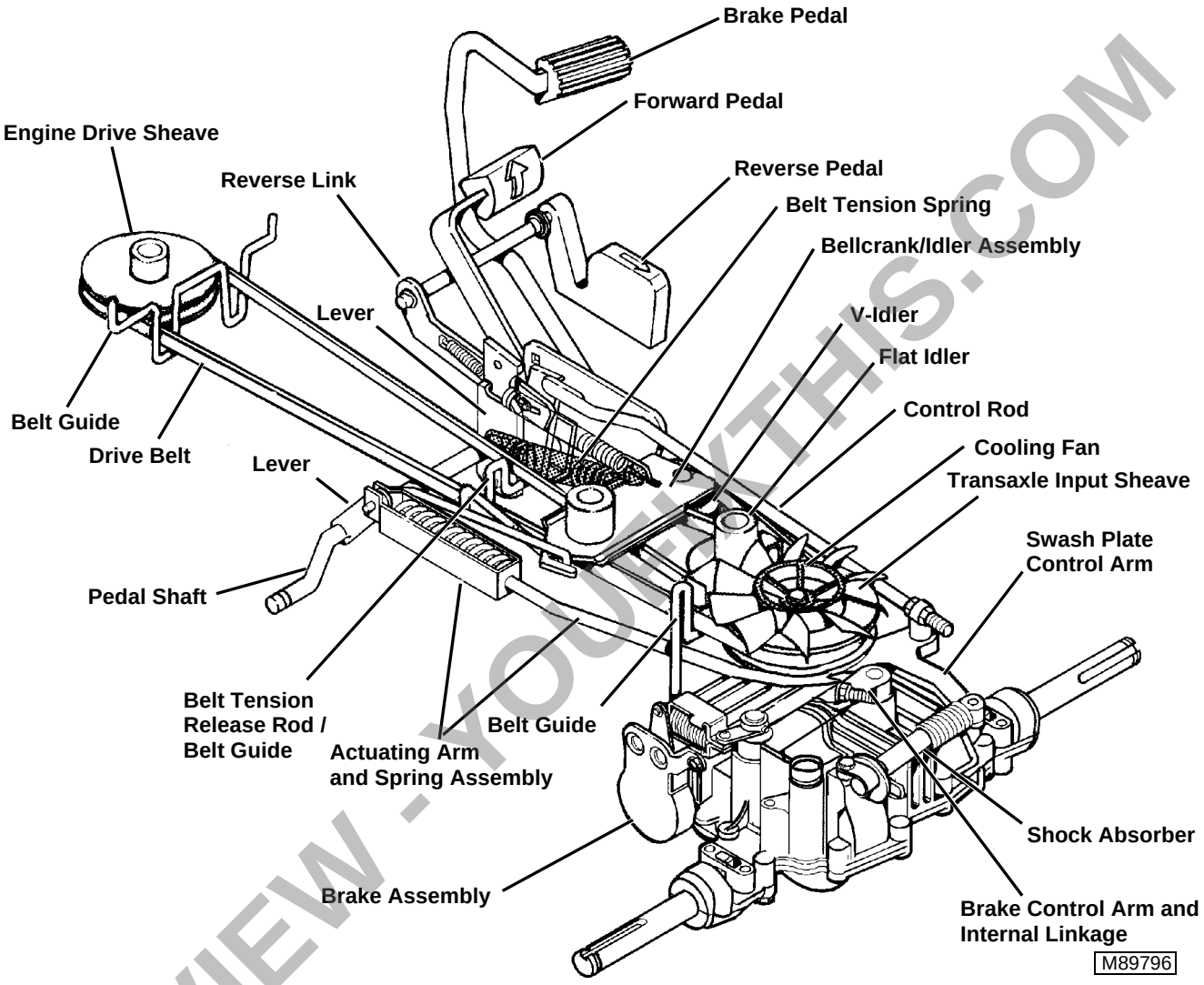

PREVIEW - YOUFIXTHIS.COM

Download full manual at youfixthis.com

TROUBLESHOOTING

Problem or Symptom / Check or Solution	Engine will not crank	Engine cranks but will not start	Engine starts hard	Engine won't shutoff	Loss of power	Low compression	Excessive engine noise/vibration	Low oil pressure	Engine running on one cylinder	Engine overheats	Fuel mixture too rich
Battery has low or no charge/cables loose or dirty	●	●	●								
Fusible link (F2) or fuse (F1) open	●										
Starter motor/solenoid defective	●										
Improper switch position (See Electrical Section)	●	●									
Engine seized	●										
Fuel shutoff solenoid defective		●		●							
Fuel filter/lines clogged		●	●		●						
Fuel pump defective		●	●		●						
Ignition coil air gap not adjusted properly		●	●		●				●		
Carburetor not adjusted properly, dirty		●	●	●	●					●	●
Air cleaner dirty		●	●		●						●
Old/contaminated fuel		●	●		●						
Spark plugs loose/dirty		●	●		●	●			●		
Magneto kill circuit grounded/shorted (See Electrical Section)		●							●		
Valve tappets need adjustment		●	●		●	●			●		
Lack of compression, check valves, pistons and rings		●	●		●				●		
Magneto kill circuit open (See Electrical Section)				●							
Mower deck binding or dragging					●		●			●	
Grass buildup under deck					●		●			●	
No lubrication in gear box or hydro/transaxle					●		●			●	
Excessive drive belt tension										●	
Deck spindles seized					●		●			●	
Loose cylinder head bolts						●			●		
Defective head gasket						●			●		
Burned valves, valve seats, and/or loose valve seats		●	●		●	●			●		

PREVIEW - YOUFIXTHIS.COM

Download full manual at youfixthis.com

GENERAL VEHICLE SPECIFICATIONS

ENGINE (2048HV)

Make	Briggs & Stratton
Model Name	Vanguard V-Twin
Model Number	No. 351777
Horsepower	14.9 kW (20 hp)
Displacement	570 cm^3 (34.7 cu in.)
Oil Capacity	
w/o oil filter	1.42 L (1.5 qt)
w/ oil filter	1.54 L (1.63 qt)
Cylinders	2
Stroke/Cycle	4
Valves	Overhead Valves
Lubrication	Fully Pressurized
Oil Filter	Single Element, Full Flow, Spin-On Filter
Cooling System	Air Cooled
Air Cleaner	Dual Stage (Paper Element w/Replaceable Outer Foam Pre-cleaner)
Muffler	Horizontal Discharge Below Frame

ENGINE (2254HV)

Make	Briggs & Stratton
Model Name	Vanguard V-Twin
Model Number	No. 380777
Horsepower	16.4 kW (22 hp)
Displacement	627 cm^3 (38.2 cu in.)
Oil Capacity	
w/o oil filter	1.42 L (1.5 qt)
w/ oil filter	1.54 L (1.63 qt)
Cylinders	2
Stroke/Cycle	4
Valves	Overhead Valves
Lubrication	Fully Pressurized
Oil Filter	Single Element, Full Flow, Spin-On Filter
Cooling System	Air Cooled
Air Cleaner	Dual Stage (Paper Element w/Replaceable Outer Foam Pre-cleaner)
Muffler	Horizontal Discharge Below Frame

ENGINE (2554HV)

Engine	Kohler
Model Number	CV25-SPS69525
Horsepower	18.6 kW (25 hp)
Displacement	725 cm^3 (44.0 cu in.)
Oil Capacity	
w/o oil filter	1.42 L (1.5 qt)
w/ oil filter	1.65 L (1.7 qt)
Cylinders	2
Stroke/Cycle	4
Valves	Overhead Valves
Lubrication	Fully Pressurized
Oil Filter	Single Element, Full Flow, Spin-On Filter
Cooling System	Air Cooled
Air Cleaner	Dual Stage
Muffler	Horizontal Discharge Below Frame

PREVIEW - YOUFIXTHIS.COM

Download full manual at youfixthis.com

RECOGNIZE SAFETY INFORMATION

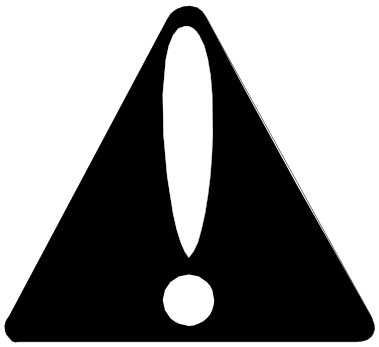

This is the safety-alert symbol. When you see this symbol on your machine or in this manual, be alert to the potential for personal injury.

Follow recommended precautions and safe servicing practices.

- **UNDERSTAND SIGNAL WORDS**

A signal word—DANGER, WARNING, or CAUTION—is used with the safety-alert symbol.

- DANGER identifies the most serious hazards. Danger or Warning safety signs are located near specific hazards.
- CAUTION safety signs are used where general precautions should be used. CAUTION also calls attention to safety messages in this manual.

REPLACE SAFETY SIGNS

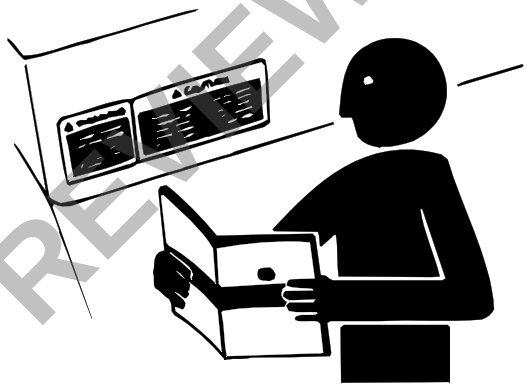

Replace missing or damaged safety signs. See the machine operator's manual for correct safety sign placement.

HANDLE FLUIDS SAFELY-AVOID FIRES

- **BE PREPARED FOR EMERGENCIES**



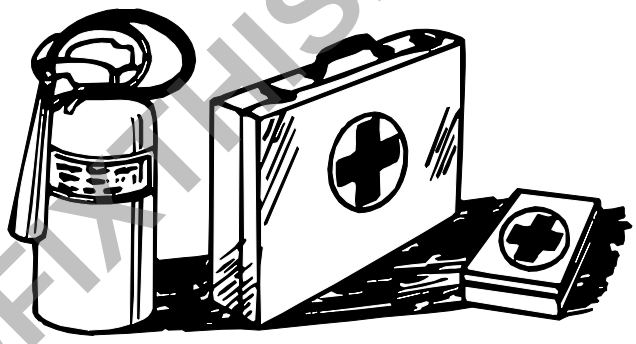

When you work around fuel, do not smoke or work near heaters or other fire hazards.

Store flammable fluids away from fire hazards. Do not incinerate or puncture pressurized containers.

Make sure machine is clean of trash, grease, and debris.

Do not store oily rags; they can ignite and burn spontaneously.

Be prepared if a fire starts.

Keep a first aid kit and fire extinguisher handy.

Keep emergency numbers for doctors, ambulance service, hospital, and fire department near your telephone.

PREVIEW - YOUFIXTHIS.COM

Download full manual at youfixthis.com

CONTENTS

Page

GENERAL VEHICLE SPECIFICATIONS 3
METRIC FASTENER TORQUE VALUES 6
INCH FASTENER TORQUE VALUES 7
GASOLINE— NORTH AMERICA 8
GASOLINE STORAGE— NORTH AMERICA 8
GASOLINE—EUROPE 9
GASOLINE STORAGE—EUROPE 9
ENGINE OIL—NORTH AMERICA 10
ENGINE OIL—EUROPE 10
ENGINE BREAK–IN OIL—NORTH AMERICA 11
ENGINE BREAK–IN OIL—EUROPE 12
ANTI-CORROSION GREASE 13
ALTERNATIVE LUBRICANTS 13
SYNTHETIC LUBRICANTS 13
LUBRICANT STORAGE 13
MIXING OF LUBRICANTS 13
CHASSIS GREASE—NORTH AMERICA 14
CHASSIS GREASE—EUROPE 14
HYDROSTATIC TRANSMISSION OIL —NORTH AMERICA 15
HYDROSTATIC TRANSMISSION OIL—EUROPE 15
PRODUCT IDENTIFICATION LOCATIONS 16
PRODUCT IDENTIFICATION NUMBER (PIN) 16
ENGINE IDENTIFICATION NUMBER—KOHLER 16
ENGINE IDENTIFICATION NUMBER—BRIGGS & STRATTON 16
HYDROSTATIC TRANSAXLE IDENTIFICATION NUMBER 16

PREVIEW - YOUFIXTHIS.COM

Download full manual at youfixthis.com

A

Adjustments
- Attachments
  - Mower Gage Wheels Adjust . . . . . 9 - 16
  - Mower Level Front-to-Rear . . . . . 9 - 15
  - Mower Level Side-to-Side . . . . . 9 - 14
- Brakes . . . . . 8 - 10
- Briggs & Stratton Engine
  - Carburetor Adjustment . . . . . 3 - 15
  - Choke Cable Adjustment . . . . . 3 - 12
  - Compression Test . . . . . 3 - 13
  - Cylinder Leak Test . . . . . 3 - 13
  - Fuel Shutoff Solenoid Test . . . . . 3 - 12
  - Governor Adjustment . . . . . 3 - 16
  - Throttle Cable Adjustment . . . . . 3 - 12
  - Valve Clearance Adjustment . . . . . 3 - 17
- Hydrostatic Power Train . . . . . 6 - 35
  - Neutral Creep Adjustment . . . . . 6 - 35
  - Oil Fill and Inspection . . . . . 6 - 38
  - Pedal Height Adjustment . . . . . 6 - 36
  - Traction Drive Belt Adjustment . . . . . 6 - 37
  - Transaxle Bleeding Procedure . . . . . 6 - 35
- Kohler Engine
  - Choke Adjustment . . . . . 4 - 16
  - Crankcase Vacuum Test . . . . . 4 - 20
  - Cylinder Compression Pressure Test 4 - 18
  - Cylinder Leak Test . . . . . 4 - 19
  - Engine Oil Pressure Test . . . . . 4 - 21
  - Fast Idle Speed Adjustment . . . . . 4 - 17
  - Fuel Pump Test . . . . . 4 - 22
  - Fuel Shutoff Solenoid Test . . . . . 4 - 20
  - Governor Adjustment . . . . . 4 - 15
  - Magnets Test . . . . . 4 - 24
  - Module Air Gap Adjustment . . . . . 4 - 24
  - Slow Idle Speed Adjustment . . . . . 4 - 18
  - Spark Plug Gap Adjustment . . . . . 4 - 23
  - Spark Test . . . . . 4 - 23
- Steering Drag Link Adjustment . . . . . 7 - 7

Attachments
- 48/54-Inch Mower Deck Components . . . . 9 - 4
- Adjustment Specifications . . . . . 9 - 3
- Adjustments . . . . . 9 - 14
- Balancing Mower Blades . . . . . 9 - 17
- Cross Section 48/54-Inch Deck . . . . . 9 - 20
- Cuts Unevenly . . . . . 9 - 13
- Diagnosis . . . . . 9 - 9
- Draft Arms Component Location . . . . . 9 - 5
- Gauge Wheels Component Location . . . . . 9 - 6
- Idlers and Sheaves 48/54-Inch . . . . . 9 - 7
- Mower Blades Removal/Installation . . . . . 9 - 16
- Mower Deck
  - Deck Vibrates . . . . . 9 - 12
  - Removal/Installation . . . . . 9 - 17
  - Will Not Run . . . . . 9 - 11
- Mower Deck Troubleshooting Chart . . . . . 9 - 8
- Mower Drive Checks . . . . . 9 - 9
- Mower Gage Wheels Adjust . . . . . 9 - 16
- Mower Level Front-to-Rear . . . . . 9 - 15
- Mower Level Side-to-Side . . . . . 9 - 14
- Repair . . . . . 9 - 16
- Repair Specifications . . . . . 9 - 3
- Service Parts Kits . . . . . 9 - 3
- Sharpen Mower Blades . . . . . 9 - 16
- Special or Essential Tools . . . . . 9 - 3
- Specifications . . . . . 9 - 3
- Spindles 48/54-Inch
  - Disassembly/Inspection . . . . . 9 - 19
  - Removal/Installation . . . . . 9 - 19
- Troubleshooting . . . . . 9 - 8

Avoid Injury From Rotating Blades
- Augers And PTO Shafts . . . . . 1 - 5

B

Battery
- Charge . . . . . .5 -56
- Load Test . . . . . .5 -57
- Specifications . . . . . .5 -6
- Test . . . . . .5 -56

Brakes
- Adjustment Specifications . . . . . 8 - 3
- Adjustments . . . . . 8 - 10
- Brake Adjustment . . . . . 8 - 10
- Brake Linkage . . . . . 8 - 10
- Brake Pedal Assembly . . . . . 8 - 10
- Brake System Operation . . . . . 8 - 4
- Component Location and Operation . . . . . 8 - 4
- Diagnosis . . . . . 8 - 6
  - Brake Switch Does Not Engage . . . . . 8 - 9
  - Brakes Do Not Engage . . . . . 8 - 6
  - Noisy Operation . . . . . 8 - 7
  - Park Brake Does Not Hold On Slope . . 8 - 7
  - Unit Will Not Move Forward or Reverse or Slow in Forward . . . . . 8 - 8
- Diagnosis Machine is Slow in Reverse . . . . 8 - 8
- Internal Brake Linkage Operation . . . . . 8 - 5
- Other Materials . . . . . 8 - 3
- Repair . . . . . 8 - 10
- Repair Specifications . . . . . 8 - 3
- Specifications . . . . . 8 - 3
- Troubleshooting . . . . . 8 - 6

Briggs & Stratton Engine
- Blower Housing Removal/Installation . . . . 3 - 18
- Breather Valve Service . . . . . 3 - 43
- Cam Gear Removal/Installation . . . . . 3 - 39

PREVIEW - YOUFIXTHIS.COM

Download full manual at youfixthis.com

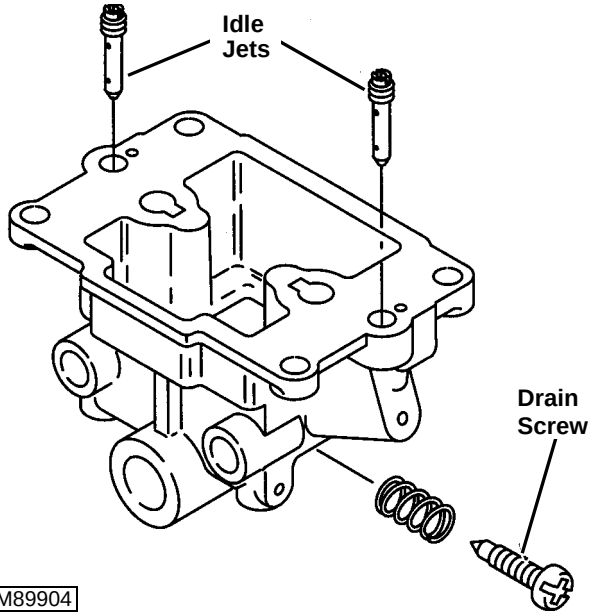

6. Install idle jets and fuel bowl drain screw and spring.

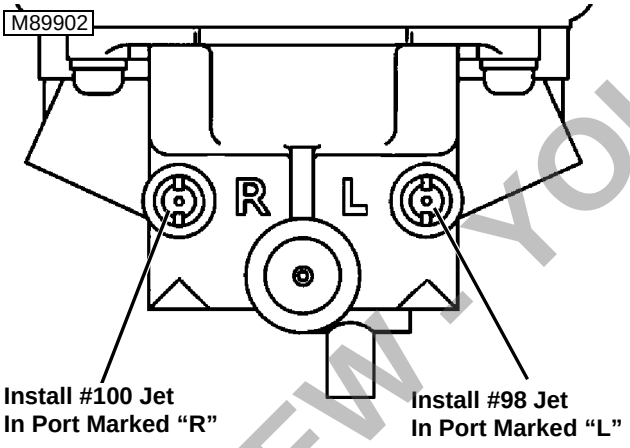

7. Install main jets, make sure the #98 jet is installed in the hole marked “L” for number 1 cylinder, and the #100 jet is installed in the hole marked “R” for the number 2 cylinder.

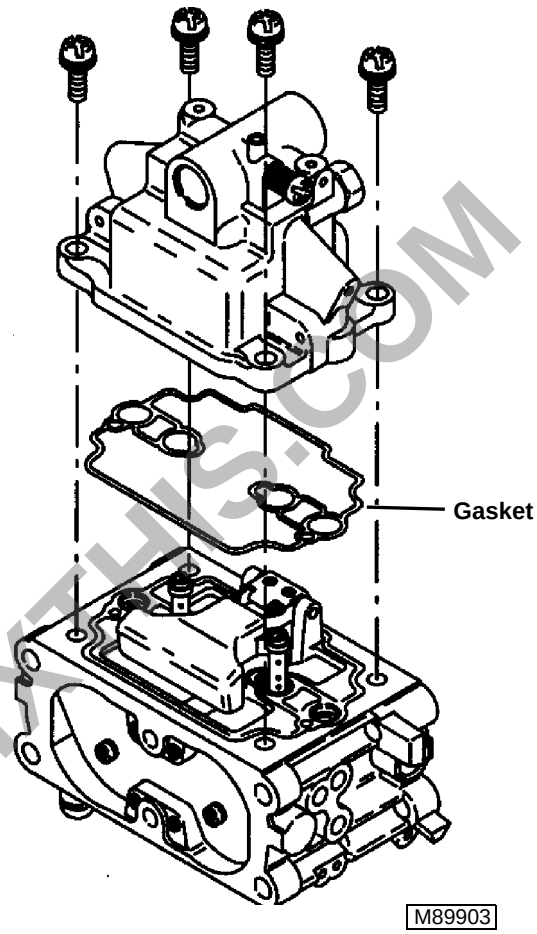

8. Install gasket in groove in carburetor upper body. Make sure gasket does not twist or kink.
9. Assemble lower body with main jet plugs facing throttle shaft side of carburetor. Make sure gasket remains in position while tightening screws.
10. Install fuel shutoff solenoid with washer. Tighten to **5 N•m (45 lb-in.)**

PREVIEW - YOUFIXTHIS.COM

Results:

- If compression is **below** minimum specification, perform cylinder leak test to better determine the state of engines condition.

CYLINDER LEAK TEST

Required Tools:

- JTO3502 Cylinder Leak Tester
- Breaker Bar & 30 mm Socket

NOTE: If the directions that come with the tester being used are different than the following, use the directions that came with the tester.

1. The engine should be run for at least 5 minutes to bring the engine to operating temperature.

⚠ CAUTION

With spark plugs removed, the magnetos must be grounded to the engine to prevent a spark that could ignite anything combustible.

2. Remove BOTH spark plugs and ground spark plug leads to engine using JDM-74A-5 Ignition Test Plug.

IMPORTANT: The piston must be positioned at Top Dead Center (TDC) to ensure that the intake valves are away from the compression relief balls. If not, the intake valve will be open and the leak test will be invalid.

3. Remove valve covers.
4. Turn crankshaft until piston is at Top Dead Center (TDC), on the compression stroke (Both Valves Closed).
5. Screw the adaptor into the spark plug hole but do not attach it to the tester at this time.

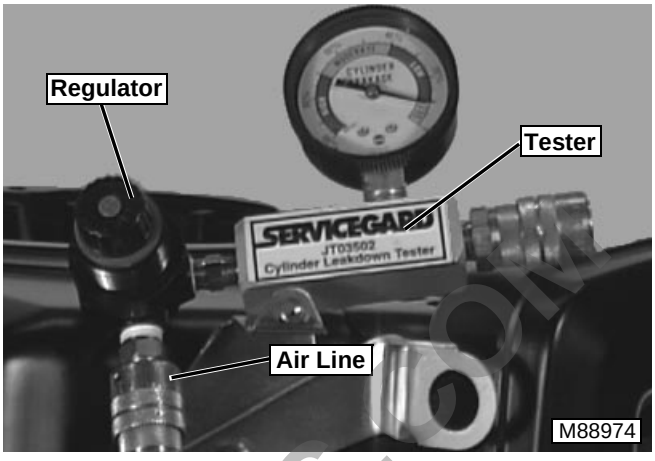

6. Pull back the locking ring and rotate the regulator knob fully counterclockwise. Connect an air line to the tester.

IMPORTANT: The air supply must have enough supply pressure to calibrate the tester (Usually 85 – 95 psi).

7. Pull back the locking ring and rotate the regulator knob clockwise until the gauge needle rests in the SET range of the gauge. Push the locking ring towards the tester to lock it.

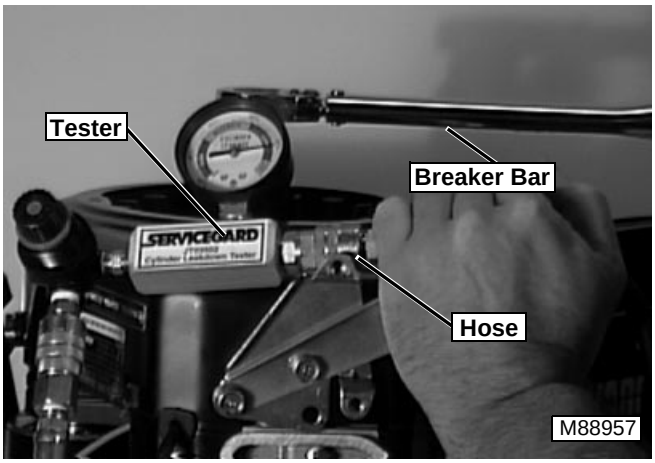

8. Connect the adaptor hose to the tester and record the needle position while holding the flywheel in position with a breaker bar.

NOTE: A small amount of air escaping from the crankcase breather is normal.

PREVIEW - YOUFIXTHIS.COM

Download full manual at youfixthis.com

ELECTRICAL SCHEMATIC

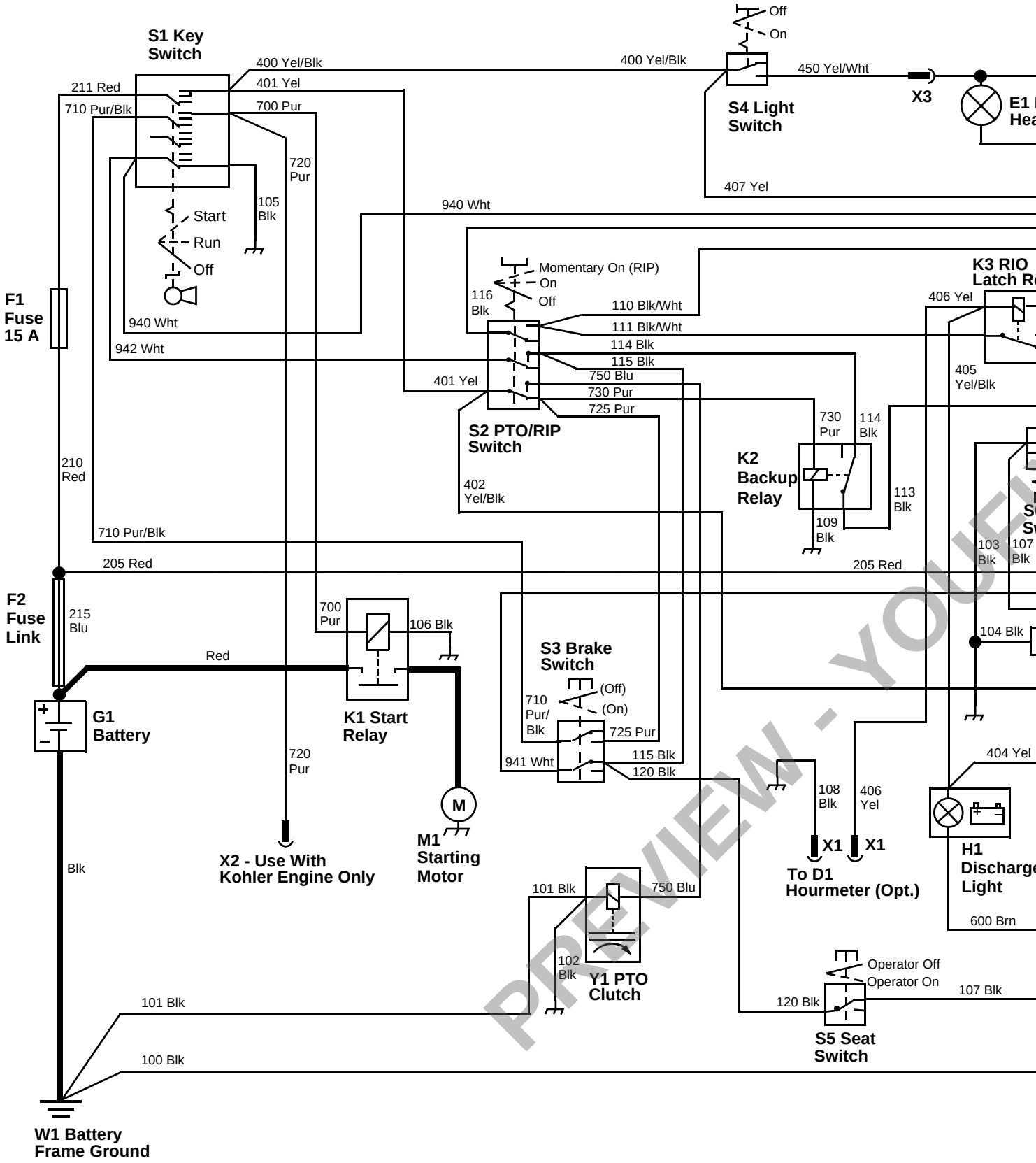

SE1 - STARTING	SE2 - IGNITION

PREVIEW - YOUFI

YourFixThis.com
Download full manual at yo

HEADLIGHT CIRCUIT OPERATION

Function:

Provides power to the headlights.

Operating Conditions:

The key switch must be in the RUN position.

Theory of Operation:

The W2 headlight wiring harness is attached to the W1 main wiring harness. Power from the S4 light switch flows through the 450 Yel/Wht wire to the to the headlight harness connector (X3). Current flows from the connector to the headlights. Ground circuit is obtained through the headlight harness connector (X3) and 100 Blk wire to ground.

PREVIEW - YOUFIXTHIS.COM

Download full manual at youfixthis.com

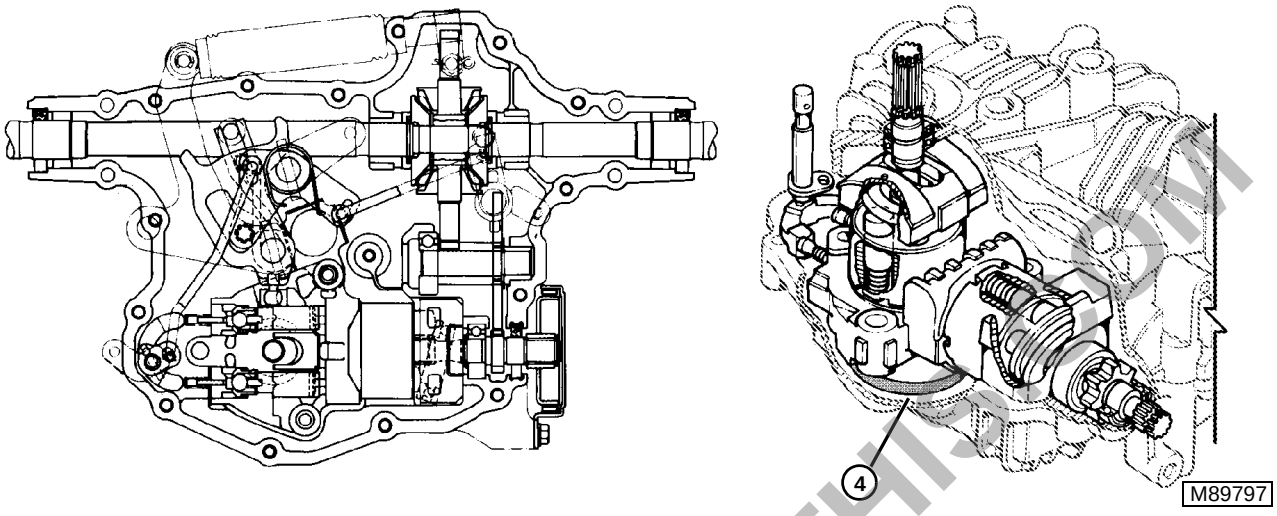

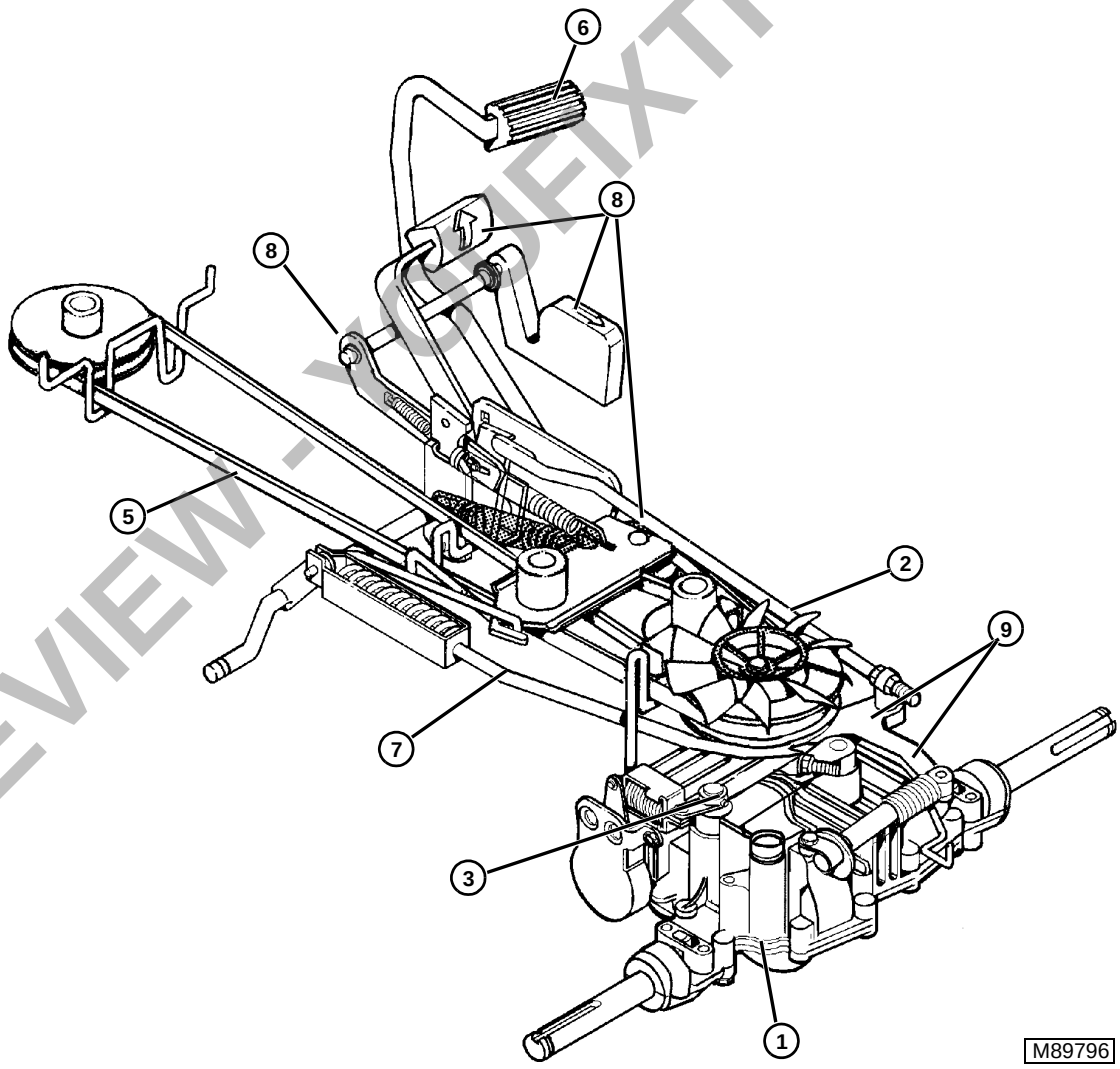

PREVIEW - YOUFIXTHIS.COM

SPECIFICATIONS

ADJUSTMENT SPECIFICATIONS

Brake Pad Clearance . . . . . 0.13 mm (0.005 in.)

REPAIR SPECIFICATIONS

Brake Holder Cap Screw Torque . . . . . 10 N•m (95 lb-in.)

OTHER MATERIALS

Number	Name	Use
TY6431	John Deere LUBRIPLATE® Lubricant	Apply to brake shaft and pins.

PREVIEW - YOUFIXTHIS.COM

® LUBRIPLATE is a registered trademark of Fiske Brothers Refining Co.

Download full manual at youfixthis.com

PREVIEW ONLY

You're viewing 17 of 326 pages

The full manual includes:

- All 326 pages, complete
- Searchable PDF (find any keyword)
- No watermarks
- Instant download
- Print-ready quality

GET FULL MANUAL NOW

John Deere 2048HV, 2254HV, 2554HV, Sabre Garden Tractors Technical Manual

Scan or click anywhere
youfixthis.com

Click anywhere on this page to get the full manual