JOHN DEERE
WORLDWIDE COMMERCIAL & CONSUMER EQUIPMENT DIVISION

Garden Tractors
X465, X475, X485, X575 and X585

TM2023 JUNE 2004

TECHNICAL MANUAL



JOHN DEERE

North American Version
Litho in U.S.A.

PREVIEW - YOUFIXTHIS.COM

Download full manual at youfixthis.com

Manual Description

This technical manual is written for an experienced technician and contains sections that are specifically for this product. It is a part of a total product support program.

The manual is organized so that all the information on a particular system is kept together. The order of grouping is as follows:

- Table of Contents
- Specifications and Information
- Identification Numbers
- Tools and Materials
- Component Location
- Schematics and Harnesses
- Theory of Operation
- Operation and Diagnostics
- Diagnostics
- Tests and Adjustments
- Repair
- Other

NOTE: Depending on the particular section or system being covered, not all of the above groups may be used.

The bleed tabs for the pages of each section will align with the sections listed on this page. Page numbering is consecutive from the beginning of the Safety section through the last section.

We appreciate your input on this manual. If you find any errors or want to comment on the layout of the manual please contact us.

Safety
Specifications and Information
Engine - Gas (Air-Cooled)
Engine - Gas (Liquid-Cooled)
Electrical
Power Train - Hydrostatic
Hydraulics
Steering
Brakes
Attachments
Miscellaneous

PREVIEW - YOUFIXTHIS.COM

Download full manual at youfixthis.com

Recognize Safety Information

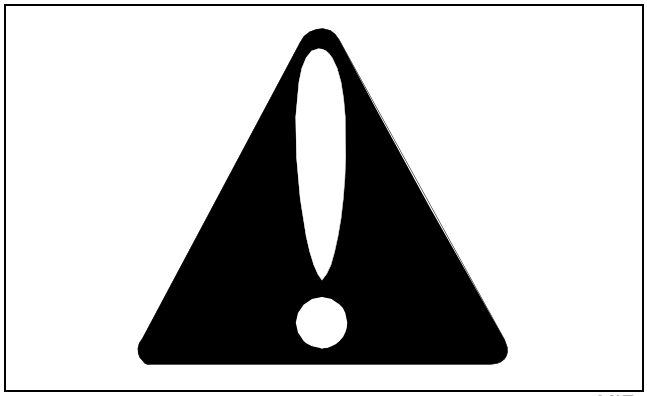

MIF

This is the safety-alert symbol. When you see this symbol on your machine or in this manual, be alert to the potential for personal injury.

Follow recommended precautions and safe servicing practices.

Understand Signal Words

A signal word - DANGER, WARNING, or CAUTION - is used with the safety-alert symbol. DANGER identifies the most serious hazards.

DANGER or WARNING safety signs are located near specific hazards. General precautions are listed on CAUTION safety signs. CAUTION also calls attention to safety messages in this manual.

Replace Safety Signs

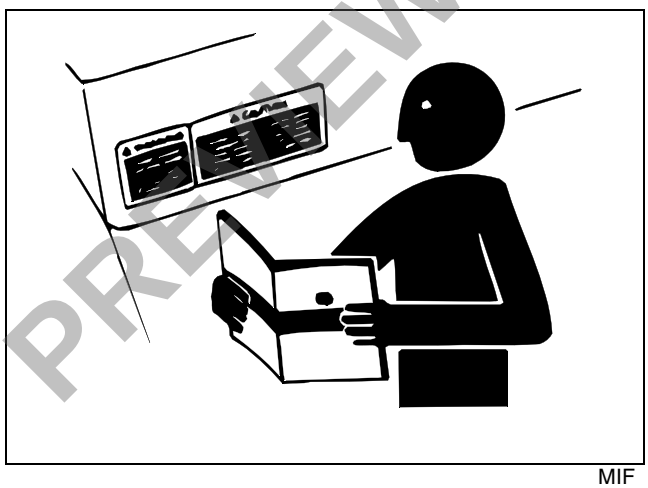

MIF

Replace missing or damaged safety signs. See the machine operator's manual for correct safety sign placement.

Handle Fluids Safely - Avoid Fires

Be Prepared For Emergencies

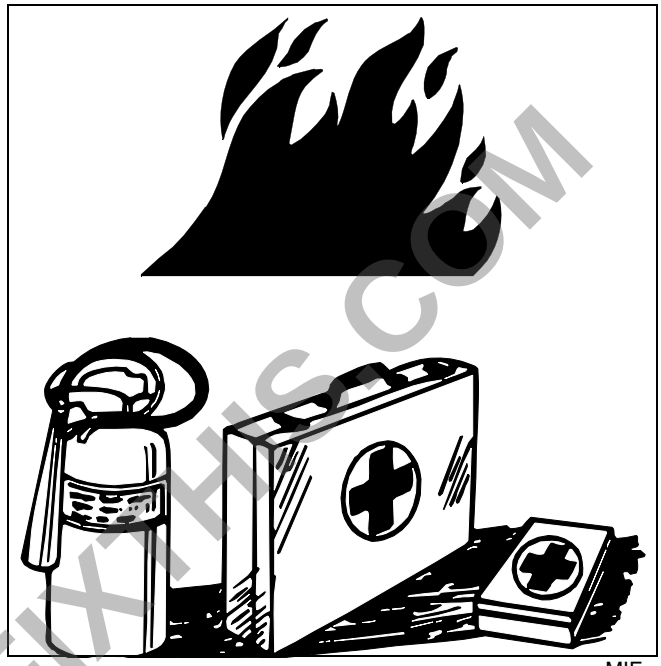

MIF

- When you work around fuel, do not smoke or work near heaters or other fire hazards.
- Store flammable fluids away from fire hazards. Do not incinerate or puncture pressurized containers.
- Make sure machine is clean of trash, grease, and debris.
- Do not store oily rags; they can ignite and burn spontaneously.
- Be prepared if a fire starts.
- Keep a first aid kit and fire extinguisher handy.
- Keep emergency numbers for doctors, ambulance service, hospital, and fire department near your telephone.

Use Care In Handling And Servicing Batteries

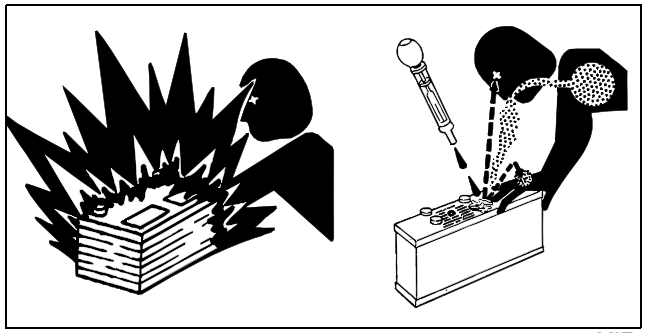

MIF

PREVIEW - YOUFIXTHIS.COM
Download full manual at youfixthis.com

Specifications

General Specifications

Model	Kawasaki
Model Number	FH641D
Power	15.7 kW (21 HP)
Displacement	675 cc (41.2 cu-in.)
Cylinders	2
Stroke/Cycle	4
Valves	Overhead Valves
Bore	75.2 mm (2.96 in.)
Stroke	76 mm (2.99 in.)
Compression Ratio	8: 1
Compression Release	Automatic
Crankshaft Type	Horizontal, Counterbalanced
Lubrication	Pressurized, Positive Displacement Pump
Oil Pressure	241 – 310 kPa (35 – 45 psi)
Oil Filter	Cartridge Type, Full Flow, Spin-On Filter
Crankcase Capacity (With Filter)	1.8 L (1.9 qt)
Cooling System	Air Cooled
Air Cleaner	Dual Element, Replaceable Paper
Muffler	Horizontal, Discharge Below Frame
Slow Idle	1600 ± 25 rpm
Fast Idle	3550 ± 25 rpm
Maximum Angle of Operation (Full Crankcase):	
Continuous (All Directions)	20°
Intermittent (All Directions)	35°
Fuel Filter	Replaceable, In-Line Type
Fuel Pump	Engine Mounted Diaphragm-type Pulse Pump
Fuel Shut-Off Solenoid	Replaceable (Below Carburetor Float Bowl)
Carburetor	Float type, Fixed Main Jet, Two Barrel
Spark Plug	Champion RCJ8Y
Charging System	12V – 13 Amps with Regulator
Weight	44.5 kg (98.1 lbs)

Tests & Adjustments Specifications

Engine	
Spark Plug Gap	1.0 mm (0.040 in.)
Valve Adjustment	0.075 – 0.125 mm (0.003 – 0.005 in.)
Oil Pressure (Minimum at 1250 rpm)	241 - 310 kPa (35 to 45 psi)
Cylinder Compression (Minimum, with Engine Warm)	390 kPa (57 psi)

PREVIEW - YOUFIXTHIS.COM

Download full manual at youfixthis.com

Flywheel Bolt . . . . . **56 N•m (41 lb-ft)**
Fuel Shut Off Solenoid Valve (Carburetor) . . . . . **19 N•m (14 lb-ft)**
Float Chamber Mounting Screw . . . . . **4 N•m (35 lb-in.)**
Governor Arm Clamp Nut . . . . . **7.8 N•m (69 lb-in.)**
Governor Shaft Plate Screws . . . . . **2 N•m (17 lb-in.)**
Ignition Coil Bolts . . . . . **5.9 N•m (52 lb-in.)**
Intake Manifold Mounting Bolts . . . . . **5.9 N•m (52 lb-in.)**
Muffler Flange Nut . . . . . **15 N•m (11 lb-in.)**
Main Jet Plug Nut . . . . . **18 N•m (13 lb-ft)**
Oil Pump Cover Plate Mounting Bolts . . . . . **5.9 N•m (52 lb-in.)**
Oil Pressure Switch . . . . . **9.8 N•m (87 lb-in.)**
Rocker Arm Bolts . . . . . **28 N•m (21 lb-ft)**
Rocker Cover Mounting Bolts . . . . . **6.9 N•m (61 lb-in.)**
Spark Plug . . . . . **22 N•m (195 lb-in.)**
Stator Coil Screws . . . . . **3.4 N•m (30 lb-in.)**
Starter Motor Mounting Bolts . . . . . **15 N•m (11 lb-in.)**
Throttle Valve Screws (use non-permanent thread locker) . . . . . **0.95 N•m (8.4 lb-in.)**
Valve Clearance Lock Screws . . . . . **6.9 N•m (61 lb-in.)**
Regulator Screws . . . . . **3.4 N•m (30 lb-in.)**

Special or Required Tools

Special or Required Tools

Tool Name	Tool No.	Tool Use
6.4 mm (0.25 in.) Drill Bit		Throttle and choke adjustment
Dial Indicator		Automatic compression relief test, Valve inspection
Photo Tachometer	JT05719	Slow idle adjustment
Cylinder Leakdown Tester	JT03502	Cylinder leakdown test
Crankcase Vacuum Test Kit	JT03503	Crankcase vacuum check
Oil Pressure Test Adapter w/ O-ring (required ONLY on engines without test ports) Connector Hose Assembly Coupler Gauge, 0 – 700 kPa (0 – 100 psi)	JT07262 JT05847 JT03017 JT03262 JT07034	Oil pressure test
Lapping Tool		Valve lapping

PREVIEW - YOUFIXTHIS.COM

Download full manual at youfixthis.com

Symptom: Engine Malfunctions At Low Speed

(2) Does engine rpm drop or engine stall at a certain point when throttle is gradually opened by hand?

Yes - Plug in carburetor interior, clean carburetor. See “Carburetor Clean/Inspect/Rebuild:” on page 50.

No - Go to next step.

(3) Is air sucked through carburetor or intake manifold flanges?

Yes - Tighten manifold flange nuts or replace damaged gasket.

No - Go to next step.

(4) Are valve clearances set correctly?

No - Adjust valves. See “Valve Clearance Adjustment” on page 38.

Symptom: Oil Consumption Is Excessive

(1) Check compression. Is compression sufficient?

Yes - See “Compression Test” on page 37. Check for oil leaks, high oil level, plugged oil ring groove, oil seals, incorrect oil viscosity.

No - Check for worn, stuck or broken piston rings, or worn cylinder bore.

(2) Is breather valve clean and is oil to correct level?

Yes - Check for clogged breather valve, plugged drain back hole in breather. See “Breather Valve Inspection” on page 76.

No - Check for worn, stuck or broken piston rings, or worn cylinder bore.

Engine Runs Erratically/Loss Of Power

IMPORTANT: Avoid damage! Before proceeding, inspect the mower deck and belts for binding in the spindle assemblies or belts that are too tight/loose. A loose belt, like a loose blade can cause a backlash effect that will counteract engine cranking effort. Excessive drive belt tension may cause premature bearing wear or result in bearing seizure. Grass clippings that build up near the cutting blades can cause excessive resistance and heat build-up that causes problems with the engine’s ability to turn the blades at a constant speed. Low lubricant levels in the spindles will build-up heat causing excessive resistance for the engine to deal with.

NOTE: To test specific electrical components, see Electrical Section and refer to either Diagnostics or Tests & Adjustments for further guidance

Starting Motor Troubleshooting Guide

CAUTION: Avoid Injury! The engine may start to rotate at any time. Keep hands away from moving parts when testing.

IMPORTANT: Avoid damage! If starting motor does not by turning ignition switch to Off position, disconnect negative (-) lead from battery as soon as possible.

NOTE: To test specific electrical components, see Electrical Section and refer to either Diagnostics or Tests & Adjustments for further guidance.

Symptom: Starter Does Not Rotate

(1) Is there a click sound from starter solenoid?

Yes - Repair starting motor. See “Starting Motor Removal and Installation” on page 82, and “Starter Motor Disassembly/Assembly” on page 83.

No - Check that all starting conditions are met. Go to next step.

(2) Are battery cables loose or dirty?

Yes - Tighten or clean.

No - Go to next step.

(3) Is battery fully charged?

No - Charge battery. See “Battery - Charge” on page 300 in the Electrical section.

Yes - Go to next step.

PREVIEW - YOUFIXTHIS.COM

Download full manual at youfixthis.com

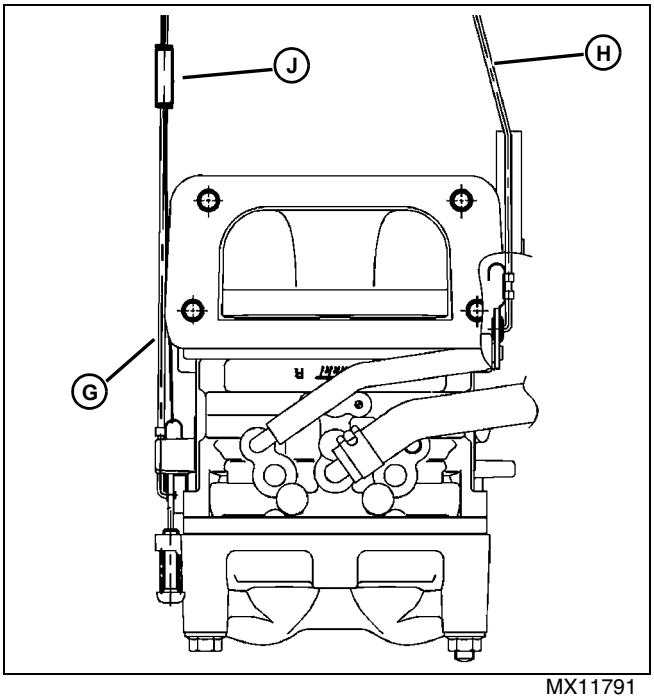

MX11791

6. Unhook the throttle (G) and choke link (H) rods from the carburetor. Disconnect the throttle link spring (J) from throttle shaft lever.

7. Unbolt the intake manifold as detailed in Intake Manifold Removal and Installation. It is necessary to pull the intake manifold/carburetor assembly away from the engine to remove the carburetor from the studs.

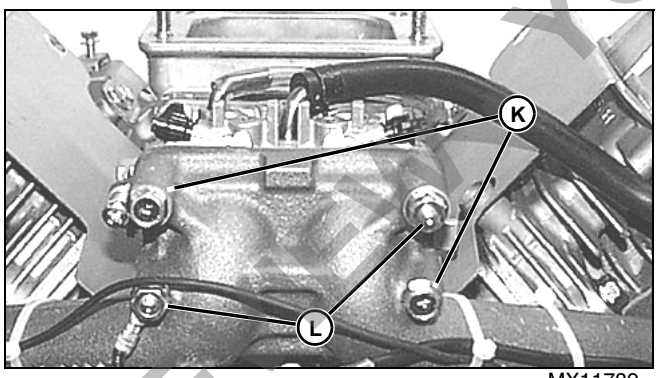

MX11789

8. Remove the carburetor mounting bolts (K) and nuts (L). Slide the carburetor back toward the governor plate to remove from the studs.

9. Clean the carburetor and intake manifold mating surfaces. Fit a new intake manifold gasket on the carburetor studs. Replace the insulator between the float bowl and carburetor if worn or damaged.

10. Slide the carburetor into position. Install the mounting bolts and nuts. Tighten nuts to 5.9 N•m (52 lb-in).

11. Install intake manifold/carburetor assembly as detailed in Intake Manifold Removal and Installation.

Carburetor Disassembly/Assembly

Disassembly:

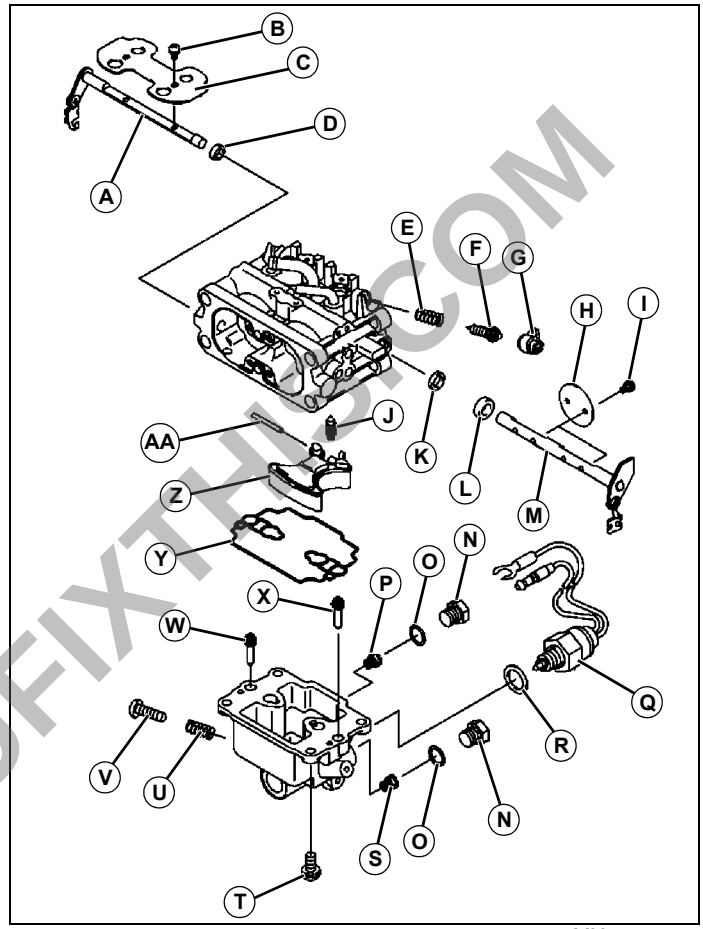

MX14441

A - Choke Shaft
B - Screw
C - Choke Valve
D - Seal
E - Spring
F - Pilot Screw
G - Limiter
H - Throttle Valve
I - Screw
J - Float Valve
K - Seal
L - Collar
M - Throttle Shaft
N - Plug, Main Jet
O - Gasket
P - Main Jet (L)
Q - Solenoid Valve
R - Gasket
S - Main Jet (R)

PREVIEW YOUFIXTHIS.COM

Download full manual at youfixthis.com

Fastener Torques

Metric Fastener Torque Values

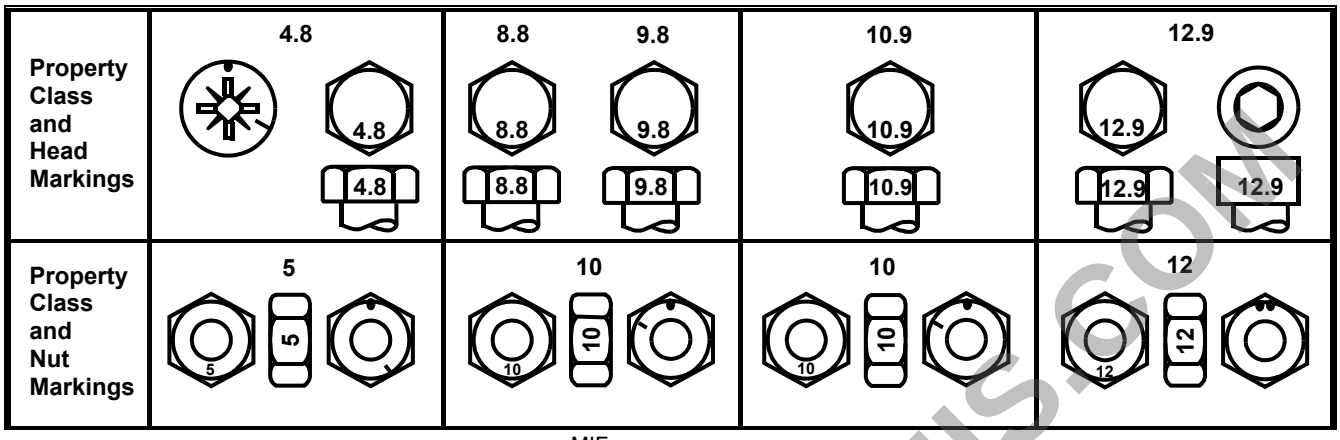

MIF

	Class 4.8				Class 8.8 or 9.8				Class 10.9				Class 12.9			
	Lubricated a		Dry a		Lubricated a		Dry a		Lubricated a		Dry a		Lubricated a		Dry a	
SIZE	N•m	lb-ft	N•m	lb-ft	N•m	lb-ft	N•m	lb-ft	N•m	lb-ft	N•m	lb-ft	N•m	lb-ft	N•m	lb-ft
M6	4.8	3.5	6	4.5	9	6.5	11	8.5	13	9.5	17	12	15	11.5	19	14.5
M8	12	8.5	15	11	22	16	28	20	32	24	40	30	37	28	47	35
M10	23	17	29	21	43	32	55	40	63	47	80	60	75	55	95	70
M12	40	29	50	37	75	55	95	70	110	80	140	105	130	95	165	120
M14	63	47	80	60	120	88	150	110	175	130	225	165	205	150	260	109
M16	100	73	125	92	190	140	240	175	275	200	350	225	320	240	400	300
M18	135	100	175	125	260	195	330	250	375	275	475	350	440	325	560	410
M20	190	140	240	180	375	275	475	350	530	400	675	500	625	460	800	580
M22	260	190	330	250	510	375	650	475	725	540	925	675	850	625	1075	800
M24	330	250	425	310	650	475	825	600	925	675	1150	850	1075	800	1350	1000
M27	490	360	625	450	950	700	1200	875	1350	1000	1700	1250	1600	1150	2000	1500
M30	675	490	850	625	1300	950	1650	1200	1850	1350	2300	1700	2150	1600	2700	2000
M33	900	675	1150	850	1750	1300	2200	1650	2500	1850	3150	2350	2900	2150	3700	2750
M36	1150	850	1450	1075	2250	1650	2850	2100	3200	2350	4050	3000	3750	2750	4750	3500

DO NOT use these hand torque values if a different torque value or tightening procedure is given for a specific application. Torque values listed are for general use only and include a ±10% variance factor. Check tightness of fasteners periodically. DO NOT use air powered wrenches.

Shear bolts are designed to fail under predetermined loads. Always replace shear bolts with identical grade.

Fasteners should be replaced with the same grade. Make sure fastener threads are clean and that you properly start thread engagement. This will prevent them from failing when tightening.

When bolt and nut combination fasteners are used, torque values should be applied to the NUT instead of the bolt head.

Tighten toothed or serrated-type lock nuts to the full torque value.

a *"Lubricated" means coated with a lubricant such as engine oil, or fasteners with phosphate and oil coatings. "Dry" means plain or zinc plated (yellow dichromate - Specification JDS117) without any lubrication*.

Reference: JDS - G200.

Download full manual at youfixthis.com

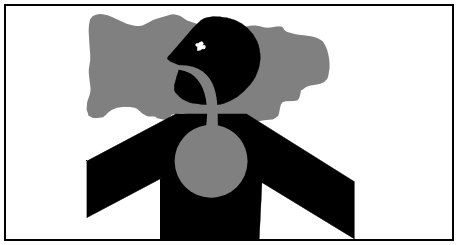

MIF

IMPORTANT: Avoid damage! California Proposition 65 Warning: Gasoline engine exhaust from this product contains chemicals known to the State of California to cause cancer, birth defects, or other reproductive harm.

Gasoline Storage

IMPORTANT: Avoid damage! Keep all dirt, scale, water or other foreign material out of gasoline.

Keep gasoline stored in a safe, protected area. Storage of gasoline in a clean, properly marked ("UNLEADED GASOLINE") POLYETHYLENE PLASTIC container WITHOUT any metal screen or filter is recommended. DO NOT use de-icers to attempt to remove water from gasoline or depend on fuel filters to remove water from gasoline. Use a water separator installed in the storage tank outlet. BE SURE to properly discard unstable or contaminated gasoline. When storing the machine or gasoline, it is recommended that you add **John Deere Gasoline Conditioner and Stabilizer (TY15977)** or an equivalent to the gasoline. BE SURE to follow directions on container and to properly discard empty container.

4 - Cycle Gasoline Engine Oil

Use the appropriate oil viscosity based on the expected air temperature range during the period between recommended oil changes. Operating outside of these recommended oil air temperature ranges may cause premature engine failure.

The following John Deere oils are PREFERRED:

- **PLUS - 4® - SAE 10W-40**;
- **TORQ - GARD SUPREME® - SAE 5W-30**.

The following John Deere oils are **also recommended**, based on their specified temperature range:

- **TURF - GARD® - SAE 10W-30;**
- **PLUS - 4® - SAE 10W-30;**
- **TORQ - GARD SUPREME® - SAE 30.**

Other oils may be used if above John Deere oils are not available, provided they meet one of the following specifications:

- SAE 10W-40 - API Service Classifications SG or higher;
- SAE 5W-30 - API Service Classification SG or higher;
- SAE 10W-30 - API Service Classifications SG or higher;
- SAE 30 - API Service Classification SC or higher.

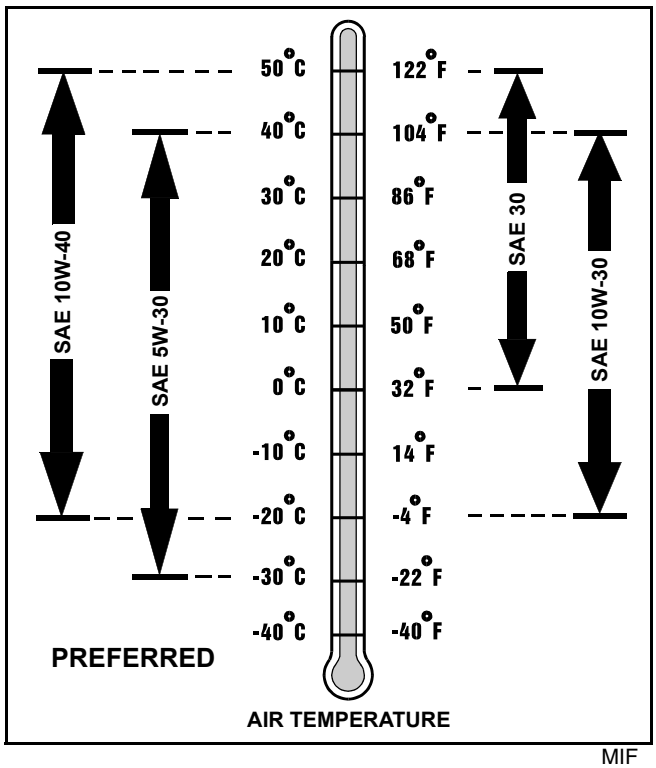

MIF

PREVIEW - YOUFIXTHIS.COM

Download full manual at youfixthis.com

Schematics and Harnesses

Schematic and Wiring Harness Legend - X465, X475 and X575

A1 - Ignition Interlock Module (SE3, W1)

A2 - Service Light Timer Module (SE3, W1) - (SN -30000)

A3 - PTO Interlock Module (SE3, W1)

B1 - Engine Oil Pressure Switch (SE2, W1)

B2 - Fuel Gauge Sensor (SE3, W1)

B3 - Engine Coolant Temperature Sensor (SE3, W1) - X475 and X575 only

E1 - Seat LED (SE3, W1)

E2 - PTO LED (SE3, W1)

E3 - RH Headlight (SE5, W3)

E4 - LH Headlight (SE5, W3)

E5 - RH Tail Light (SE5, W4)

E6 - RH Backup Light (SE5, W4)

E7 - LH Tail Light (SE5, W4)

E8 - LH Backup Light (SE5, W4)

E9 - Spark Plug (SE4, W2)

E10 - Spark Plug (SE4, W2)

F1 - Fuse 20A (SE1, W1)

F2 - Fusible Link (SE1, W1)

F3 - Fusible Link (SE1, W1)

F4 - Fuse 15A (SE3, W1)

F5 - Fuse 15A (SE3, W1)

G1 - Battery (SE1, W1)

G2 - Alternator (SE1, W1)

H1 - Discharge Light (SE2, W1)

H2 - Engine Oil Pressure Light (SE3, W1)

H3 - Service Indicator Light (SE3, W1) - (SN -30000)

H4 - RIO Defeat Light (SE3, W1)

H5 - Rear PTO Light (SE3, W1)

H6 - Mid PTO Light (SE3, W1)

H7 - Dash Light (SE4, W1)

H8 - Brake Light (SE3, W1) (SN 30001-)

K1 - Start Relay (SE3, W1)

K2 - Magneto Start Relay (SE3, W1)

K3 - RIO Latch Relay (SE3, W1)

K4 - RIO Unlatch Relay (SE3, W1)

K5 - Ignition Relay (SE3, W1)

K6 - PTO Relay (SE3, W1)

K7 - Brake Lock Relay (SE3, W1)

K8 - Off Seat Relay (SE3, W1)

K9 - Mid PTO Relay (SE3, W1)

K10 - Rear PTO Relay (SE3, W1)

M1 - Starting Motor (SE1, W1)

M2 - Fuel Pump (SE3, W1) - X475 and X575 only

N1 - Voltage Regulator/Rectifier (SE2, W1)

P1 - Hourmeter (SE3, W1)

P2 - Fuel Gauge (SE3, W1)

P3 - Engine Coolant Temperature Gauge (SE3, W1) - X475 and 575 only

S1 - Key Switch (SE2, W1)

S2 - Service Timer Reset Switch (SE3, W1) (SN -30000)

S3 - Seat Switch (SE3, W1)

S4 - RIO Switch (SE3, W1)

S5 - PTO/RIP Switch (SE3, W1)

S6 - Brake Switch (SE3, W1)

S7 - Rear PTO Switch (SE3, W5)

S8 - Mid PTO Switch (SE4, W5)

S9 - Light Switch (SE4, W1)

S10 - Accessory Switch (SE5, W4)

T1 - Ignition Coil (SE4, W2)

T2 - Ignition Coil (SE4, W2)

V1 - Diode (SE3, W1)

V2 - Diode (SE3, W1)

V3 - Diode (SE3, W1)

V4 - Diode (SE3, W1)

V5 - Diode (SE4, W1)

W1 - Frame Ground (SE1, W1)

Y1 - Starting Motor Solenoid (SE1, W1)

Y2 - Fuel Shutoff Solenoid (SE3, W2)

Y3 - PTO Clutch Solenoid (SE4, W1)

PREVIEW - YOUFIXTHIS.COM

Download full manual at youfixthis.com

Vacuum Pressure Sensor - X485/X585:

Left and Center Terminals . . . . . 2986 - 3034 ohms
Left and Right Terminals . . . . . 773 - 787 ohms
Center and Right Terminals . . . . . 3774 - 3798 ohms
Input Voltage . . . . . about 5 volts
Output Voltage . . . . . 0.5 - 4.9 volts depending on Air Pressure

Air and Coolant Temperature Sensors - X485/X585:

At 20°C (68°F) . . . . . 2.21 - 2.69 k-ohms
At 0 - 30°C (32 - 86°F) . . . . . 5.88 - 1.65 k-ohms

Fuel Injector:

Resistance at 20°C (68°F) . . . . . 13.8 ohms

RIO Switch:

Air Gap. . . . . 12 mm (0.47 in.)

Repair Specifications

Starter - X465, X475, X485, X575, and X585

Minimum Brush Length . . . . . 6.0 mm (0.24 in.)

EFI Module Fault Code Chart

The long flash " **-** " = 1.0 second

The short flash "**•**" = 0.5 second

OFF period = 3 to 4 seconds.

The flash code begins after the off period.

Let the code cycle several times while reading the code to be sure you are at the beginning of the code.

FAULT CODE	FLASH SEQUENCE	TEST POINT	FAULT CAUSE
12	- ••	Intake air temperature sensor	B5 air temperature sensor circuit malfunctioning. Circuit either open or shorted.
13	- •••	Coolant temperature sensor	B4 coolant temperature sensor circuit malfunctioning. Circuit either open or shorted.
21	- - •	Vacuum pressure sensor	B6 vacuum pressure sensor circuit malfunctioning. Circuit either open or shorted.
22	- - ••	N/A	EFI module air/fuel pressure calculation error. To reset: Stop engine, wait for fault indicator light to go off and fuel pump to stop (approximately 0.5 to 1 second). Start engine.

PREVIEW - YOUFIXTHIS.COM

Download full manual at youfixthis.com

Table of Contents

Specifications 431
General Specifications 431
Test and Adjustment Specifications 431
Repair Torque Specifications 432
Special or Essential Tools 432
Other Materials 432
Schematics 433
Hydraulic Schematic - Power Train 433
Component Location 434
Hydraulic System 434
Operation and Diagnostics 435
Hydraulic System 435
Hydraulic Control Valve Operation - Neutral 436
Hydraulic Control Valve Operation - Raise .437
Hydraulic Control Valve Operation - Float .438
Hydraulic Control Valve Operation - Regen 439
Lift Cylinder Shut-off Valve - Optional 440
Hydraulic Diagnostics 440
Preliminary Hydraulic System Inspection .442
Hydraulic System Tests 443
Tests and Adjustments 444
Hydraulic Oil Warm-Up Procedure 444
Charge Pump Pressure and Flow Quick Test at Couplers 444
Charge Pump Pressure Test 445
Lift Cylinder Leakage Test 447
Control Valve Leakage Test 447
Repair 448
Hydraulic Control Valve Removal and Installation 448
Hydraulic Control Valve 449
Lift Cylinder Removal and Installation 450
Hydraulic Control Levers and Linkage 451

PREVIEW - YOUFIXTHIS.COM

Download full manual at youfixthis.com

INDEX

Numerics

48C Mower Deck Spindle Removal and Installation . . 514
54C Mower Deck Spindle Removal and Installation . . 517
62C Mower Deck Spindle Removal and Installation . . 520

A

Alternative lubricants 18
Attachments
  Component Location
    PTO Generator 531
  Conductors for 12 Volt Circuits 529
  Diagnosis
    Loader Diagnosis 506
    Mower Deck Diagnosis 503
  Electrical
    Common Circuit Tests 528
    Conductors for 12 Volt Circuits 529
    Diagnostic Information 528
    Reading Electrical Schematics 527
    Theory of Operation Information 528
    Wire Color Abbreviation Chart 528
  General Specifications 499
  Generator Circuit Diagnosis 538
  Identification Numbers
    PTO Generator 530
  Loader Specifications 500
  Mower Deck Blade Balance 514
  Mower Deck Specifications 499
  PTO Electrical Schematic 536
  PTO Generator Electrical
    Control Panel Removal and Installation 547
    Generator Assembly and Installation 546
    Generator Circuit Diagnosis 538
    Generator Circuit Operation 538
    Generator Ground Test 542
    Generator Removal and Disassembly 543
    Generator Rotor Test 541
    Generator Stator Test 540
    Ground Fault Circuit Interrupter (GFCI) Checks 541
    PTO Shield Removal and Installation 543
    Rotor Bearing Removal and Installation 545
    Rotor Fan Removal and Installation 545
    Standard Electrical Schematic 536
    Stator Excitation Field Restoration 542
    Wiring Harness Legend 535
  PTO Generator Gear Case Removal 543
  PTO Generator Specifications 501
  PTO Generator Wiring Harness Legend 535
  Recommended Lubricants Specifications 500
  Repair
    48C Idlers 516
    48C Jacksheave 517
    48C Mower Deck Spindle Removal and Installation 514
    54C Idlers 520
    54C Jacksheave 519
    54C Mower Deck Spindle Removal and Installation 517
    62C Mower Deck Spindle Removal and Installation 520
    Cleaning Grass and Debris from Machine 511
    Mower Deck Belt Shield Removal and Installation 511
    Mower Deck Blade Removal and Installation .513
    Mower Deck Blade Sharpen 514
    Mower Deck Drive Shaft Removal and Installation 522
    Mower Deck Drive Shaft Repair 523
    Mower Deck Gearbox Removal and Installation 524
    Mower Deck Gearbox Repair 526
  Repair Specifications 501
  Tests and Adjustments
    Adjusting Cutting Height 507
    Adjusting Loader Latch Rod 510
    Adjusting Mower Deck Wheels 507
    Adjusting Mower Level Front to Rear 509
    Adjusting Mower Level Side to Side 508
    Cylinder Leakage Test 510
    Loader Lubrication 510
    Mower Deck Level Check and Adjustment . . .508
  Wire Abbreviation Chart 528
Avoid Harmful Asbestos Dust 4
Avoid Injury
  Rotating Blades, Augers And PTO Shafts 5
Axle, front
  Disassembly/assembly 475
  Removal/installation 474

B

Brake
  PTO, disassembly/inspection/assembly 382
  PTO, removal/installation 381
Brake test, Mid-PTO 363
Brake/differential linkage
  Adjustment 491
Brakes
  Diagnosis 489
  Operation 488
  Removal/installation 495
Break-in engine oil
  4-cycle gasoline 16

C

California Proposition 65 Warning 4
Center valve block, hydrostatic power train 403
Charge pressure test 360, 445
Charge pump
  Disassembly/assembly 376
  Flow quick test, at charge pump 361
  Flow quick test, at couplers 444

Download full manual at youfixthis.com

PREVIEW - YOUFIXTHIS.COM

PREVIEW - YOUFIXTHIS.COM

Download full manual at youfixthis.com

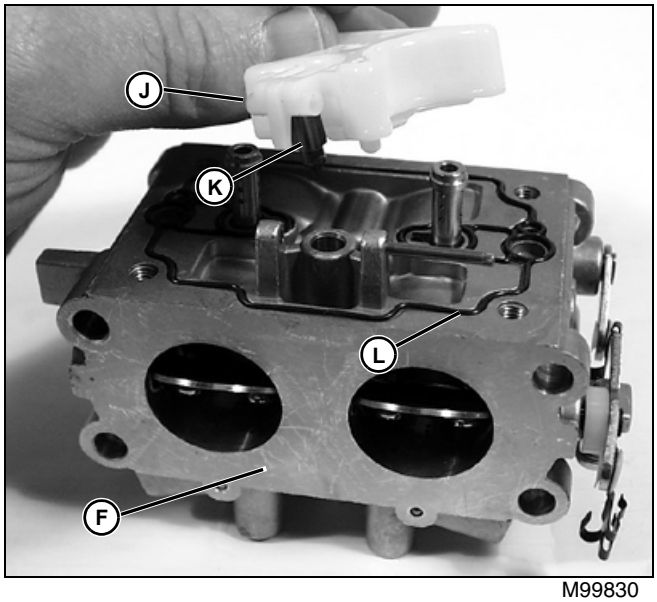

M99830

6. Lift the float (J) and float valve (K) off the carburetor body (F).

7. Carefully remove the rubber gasket (L)

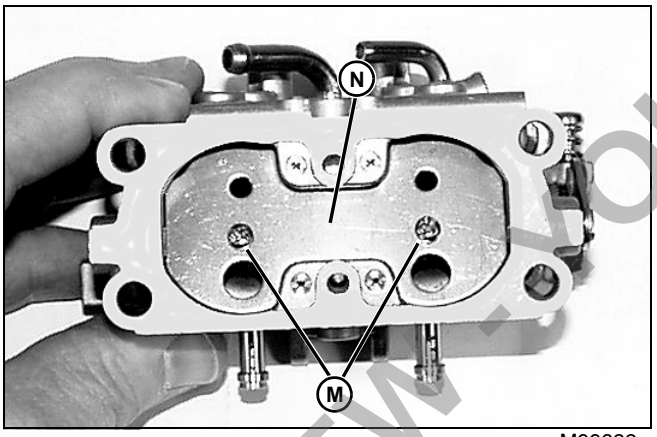

M99832

8. Mark the choke plate (N) so it can be installed in the original position. Remove two screws (M) securing the choke plate to the choke shaft.

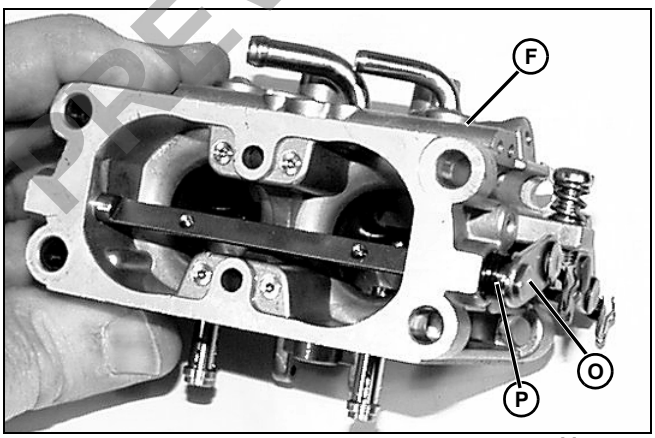

M99834

9. Slide the choke shaft (O) and shaft seal (P) out of the carburetor body (F).

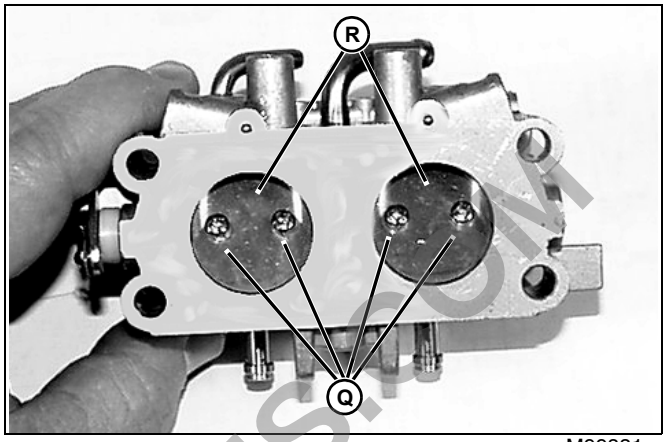

M99831

10.Mark the throttle valve plates (R) so they can be installed in the original position. Remove four screws (Q) securing the plates to the throttle shaft.

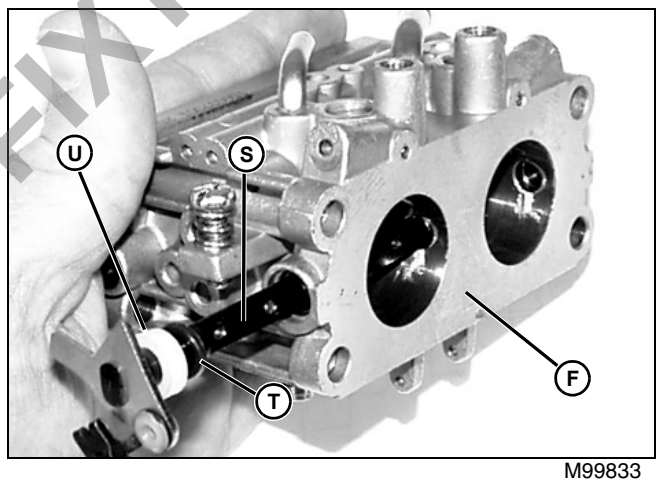

M99833

11.Slide the throttle shaft (S), shaft seal (T) and collar (U) out of the carburetor body (F).

12.Check throttle and choke shafts and bushings for wear. Wear between shafts and carburetor bushings should not exceed 0.25 mm (0.010 in.).

13.Check wear by placing carburetor on 6 mm (1/4 in.) thick raised flat surface. Measure the up and down movement of the shaft with a feeler gauge or dial indicator while moving the shaft up and down.

PREVIEW - YOUFIXTHIS.COM

Download full manual at youfixthis.com

Muffler Flange Nut . . . . . **20 N•m (177 lb-in.)**
Main Jet . . . . . **0.7 N•m (6 lb-in.)**
Oil Pump Cover Plate Mounting Bolts: . . . . . **6 N•m (52 lb-in.)**
Oil Pressure Switch . . . . . **15 N•m (132 lb-in.)**
Rocker Arm (Valve Clearance) Adjusting Locknuts . . . . . **11 N•m (96 lb-in.)**
Rocker Arm Bracket Mounting Bolts . . . . . **22 N•m (195 lb-in.)**
Rocker Cover Mounting Bolts . . . . . **6.9 N•m (61 lb-in.)**
Connecting Rod Cap Bolts . . . . . **21 N•m (186 lb-in.)**
Spark Plug Torque . . . . . **25 N•m (221 lb-in.)**
Screws . . . . . **3.4 N•m (30 lb-in.)**
Starter Motor Mounting Bolts . . . . . **20 N•m (177 lb-in.)**
Voltage Regulator Screws . . . . . **3.4 N•m (30 lb-in.)**

Special or Required Tools

Special or Required Tools

Tool Name	Tool No.	Tool Use
Photo Tachometer	JT05719	Slow and fast idle adjustment
Cylinder Leakdown Tester	JT03502	Cylinder leakdown test
Crankcase Vacuum Test Kit	JT03503	Crankcase vacuum check
Connector Hose Assembly Pressure Gauge Assembly	JT03349 JT03017 JT03344	Oil pressure test
Compression Gauge	JDM59	Cylinder compression test
Fuel Pump Pressure Test Kit	JDG356	Fuel pump pressure test - FD671D engines
Fitting Pressure Gauge 0-400 kPa (0-60 psi) Fuel Hose	JDG41 JTO7032	Fuel pump pressure test - FD711D engines
Tension Gauge	JDST28	Fan belt tension check
Cooling System Pressure Pump Radiator Test Kit	D05104ST JDG692	Radiator cap and cooling system pressure tests
Lapping Tool		Valve lapping

PREVIEW - YOUFIXTHIS.COM

Download full manual at youfixthis.com

8. With the multimeter in the R x 1 ohm position measure the resistance between the armature shaft and the commutator. If the resistance is less than infinite, the armature is shorted and must be replaced.

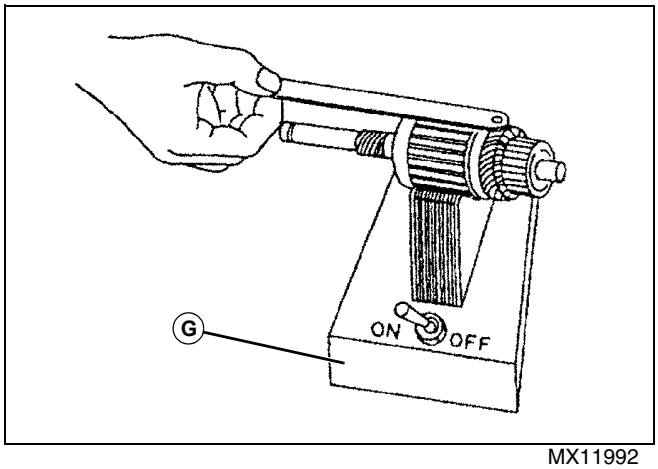

MX11992

9. Place the armature on a growler (G) and hold a thin metal strip (e.g. a hack saw blade) on top of the armature. Turn on the growler and rotate the armature one complete turn. If the metal strip vibrates, the windings are internally shorted to each other and the starter must be replaced.

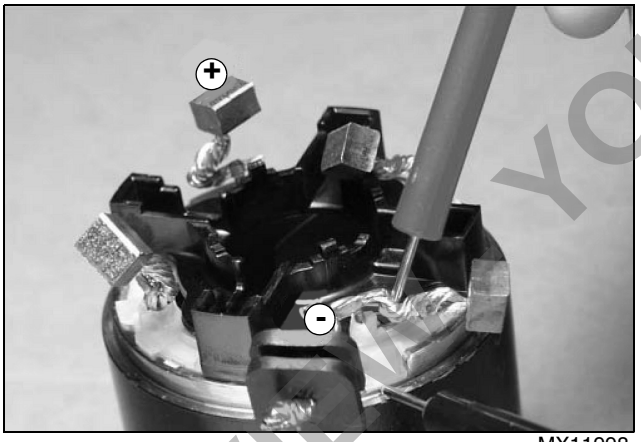

MX11998

10.With the multimeter in the Rx 1k ohm position, measure the resistance between the positive brushes and starter motor yoke. If resistance is less than infinite on any brush, the brush is shorted and the complete yoke assembly must be replaced.

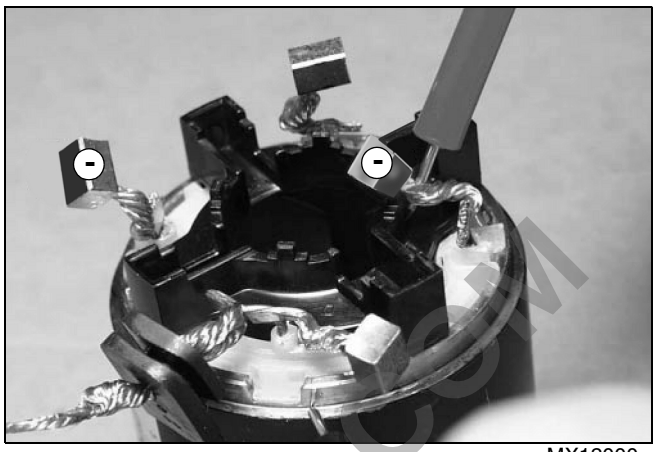

MX12000

11.With the multimeter in the Rx 1 ohm position, measure the resistance between the negative brushes and starter motor yoke. If resistance is less than infinite on any brush, the brush is shorted and the complete yoke assembly must be replaced.

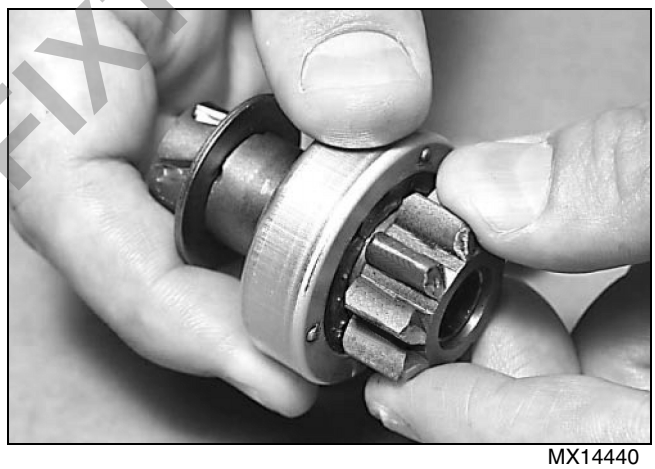

MX14440

12.Remove the pinion clutch and turn it by hand. The clutch should turn freely counterclockwise, and lock up and not turn in a clockwise direction. If the clutch does not operate correctly or is noisy when freewheeling, replace it.

PREVIEW - YOUFIXTHIS.COM

Download full manual at youfixthis.com

H1 - Discharge Light (SE2, W1)

H2 - Engine Oil Pressure Light (SE3, W1)

H3 - Service Indicator Light (SE3, W1) (SN -30000)

H4 - RIO Defeat Light (SE3, W1)

H5 - Rear PTO Light (SE3, W1)

H6 - Mid PTO Light (SE3, W1)

H7 - Dash Light (SE4, W1)

H8 - Circuit Integrity Light (SE3, W1)

H9 - Brake Light (SE3, W1) (SN 30001-)

K1 - Start Relay (SE3, W1)

K2 - Magneto Start Relay (SE3, W1)

K3 - RIO Latch Relay (SE3, W1)

K4 - RIO Unlatch Relay (SE3, W1)

K5 - Ignition Relay (SE3, W1)

K6 - PTO Relay (SE3, W1)

K7 - Brake Lock Relay (SE3, W1)

K8 - Off Seat Relay (SE3, W1)

K9 - Mid PTO Relay (SE3, W1)

K10 - Rear PTO Relay (SE3, W1)

K11 - Injector Module Ground Relay (SE3, W1)

K12 - Injector Module Power Relay (SE4, W1)

K13 - Fuel Pump Relay (SE4, W1)

M1 - Starting Motor (SE1, W1)

M2 - Fuel Pump (SE3, W1)

N1 - Voltage Regulator/Rectifier (SE2, W1)

P1 - Hourmeter (SE3, W1)

P2 - Fuel Gauge (SE3, W1)

P3 - Engine Coolant Temperature Gauge (SE3, W1)

S1 - Key Switch (SE2, W1)

S2 - Service Timer Reset Switch (SE3, W1) (SN -30000)

S3 - Seat Switch (SE3, W1)

S4 - RIO Switch (SE3, W1)

S5 - PTO/RIP Switch (SE3, W1)

S6 - Brake Switch (SE3, W1)

S7 - Rear PTO Switch (SE3, W5)

S8 - Mid PTO Switch (SE4, W5)

S9 - Light Switch (SE4, W1)

S10 - Accessory Switch (SE5, W4)

T1 - Ignition Coil (SE6, W2)

T2 - Ignition Coil (SE6, W2)

V1 - Diode (SE3, W1)

V2 - Diode (SE3, W1)

V3 - Diode (SE3, W1)

V4 - Diode (SE3, W1)

V5 - Diode (SE4, W1)

W1 - Frame Ground (SE1, W1)

W2 - Frame Ground (SE6, W2)

Y1 - Starting Motor Solenoid (SE1, W1)

Y3 - PTO Clutch Solenoid (SE4, W1)

Y4 - #1 Cylinder Fuel Injection Solenoid (SE6, W2)

Y5 - #2 Cylinder Fuel Injection Solenoid (SE6, W2)

Connectors:

X1 - W1 Main Wiring Harness to A1 Ignition Interlock Module (SE1, W1)

X2 - W1 Main Wiring Harness to W2 Engine Wiring Harness (SE2, W1; SE3, W1)

X3 - W1 Main Wiring Harness to Instrument Panel (SE2, W1; SE3, W1; SE4, W1)

X4 - W1 Main Wiring Harness to A1 Ignition Interlock Module (SE3, W1)

X5 - W1 Main Wiring Harness to A1 Ignition Interlock Module (SE3, W1)

X6 - W1 Main Wiring Harness to W5 PTO Solenoid Wiring Harness (SE3, W1; SE4, W1)

X7 - W1 Main Wiring Harness to A3 PTO Interlock Module (SE3, W1)

X8 - W1 Main Wiring Harness to A3 PTO Interlock Module (SE3, W1)

X9 - W1 Main Wiring Harness to A3 PTO Interlock Module (SE3, W1)

X10 - W1 Main Wiring Harness to B2 Fuel Gauge Sensor/ M2 Fuel Pump (SE3, W1)

X11 - W1 Main Wiring Harness to Y3 PTO Clutch Solenoid (SE4, W1)

X12 - W1 Main Wiring Harness to W4 Rear Wiring Harness (SE5, W1)

X13 - W1 Main Wiring Harness to W3 Headlight Wiring Harness (SE5, W1)

X14 - W3 Headlight Wiring Harness to E3 RH Headlight (SE5, W3)

X15 - W3 Headlight Wiring Harness to E4 LH Headlight (SE5, W3)

X16 - W4 Rear Wiring Harness to E5 RH Tail Light (SE5, W4)

PREVIEW - YOUFIXTHIS.COM

Download full manual at youfixthis.com

Cranking Circuit Diagnosis - All Models

Test Conditions:

- Key switch in run position, engine not running.
- Brake locked.
- PTO off.

Test/Check Point	Normal	If Not Normal
1. Ignition interlock module	Continuity to ground	Check 130 and 100 Blk wires and connections.
2. Key switch	Battery voltage	Test F3 fusible link. Check 200 Red wire and connections.
3. Ignition interlock module	Battery voltage	Test F5 fuse. If OK, replace ignition interlock module.
4. Brake switch	Battery voltage	Check 500 and 501 Yel wires and connections.
5. PTO/RIP switch	Battery voltage	Check 765 Pur wire and connections. If OK, replace brake switch.
6. Ignition interlock module	Battery voltage	Check 705 Pnk/Blk wire and connections. If OK, replace PTO/RIP switch.
7. Ignition interlock module	Battery voltage, green LED illuminated	Replace ignition interlock module.

Test Conditions:

- Spark plug wires removed and grounded to engine.
- Key switch in start position.
- Brake locked.
- PTO off.

Test/Check Point	Normal	If Not Normal
8. Starting motor solenoid	Battery voltage	Check 720 Pur wire and connections. If OK, replace ignition interlock module.

PREVIEW - YOUFIXTHIS.COM

Download full manual at youfixthis.com

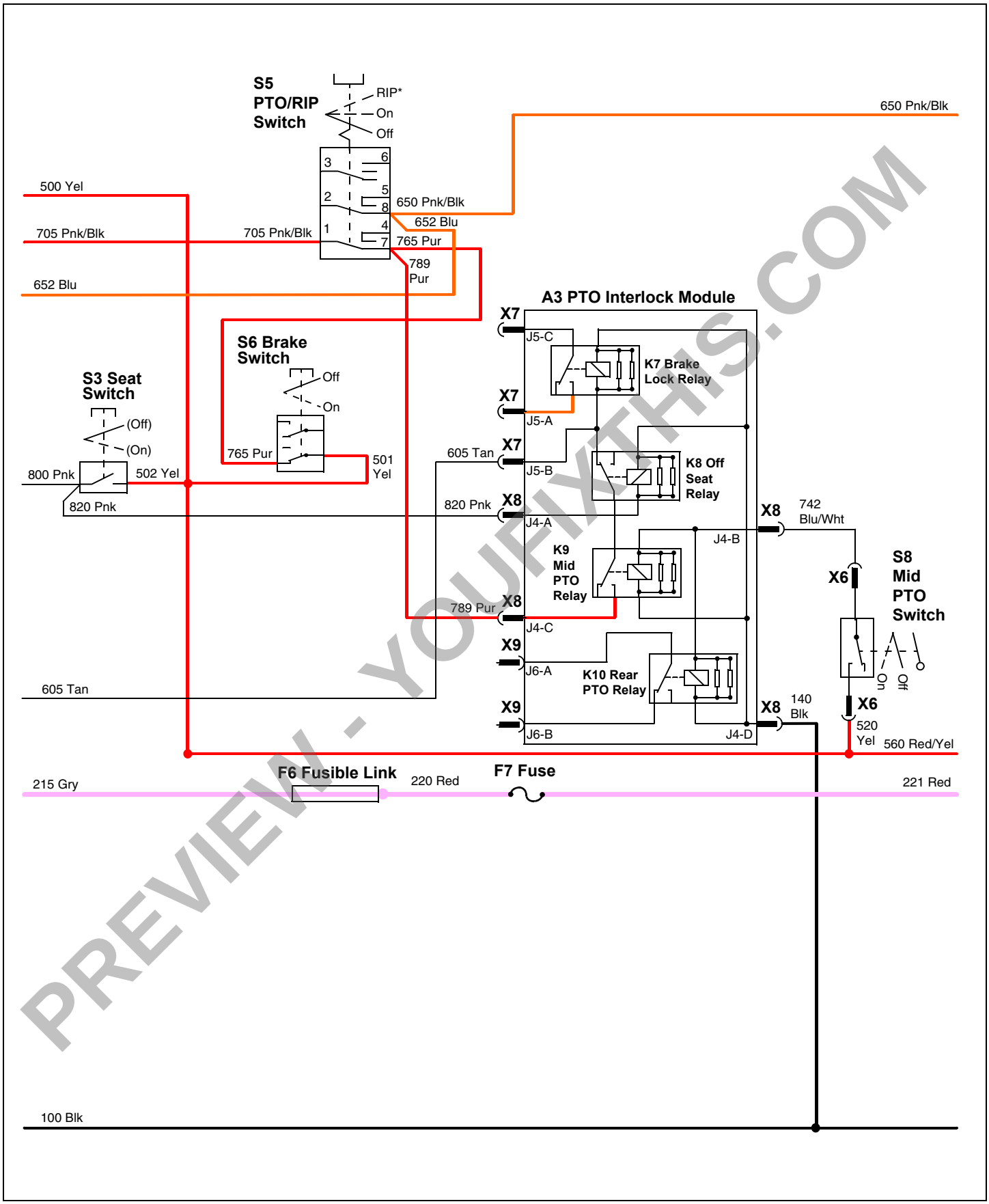

PREVIEW - YOUFIXTHIS.COM

Download full manual at youfixthis.com

Component Location

Hydrostatic Power Train

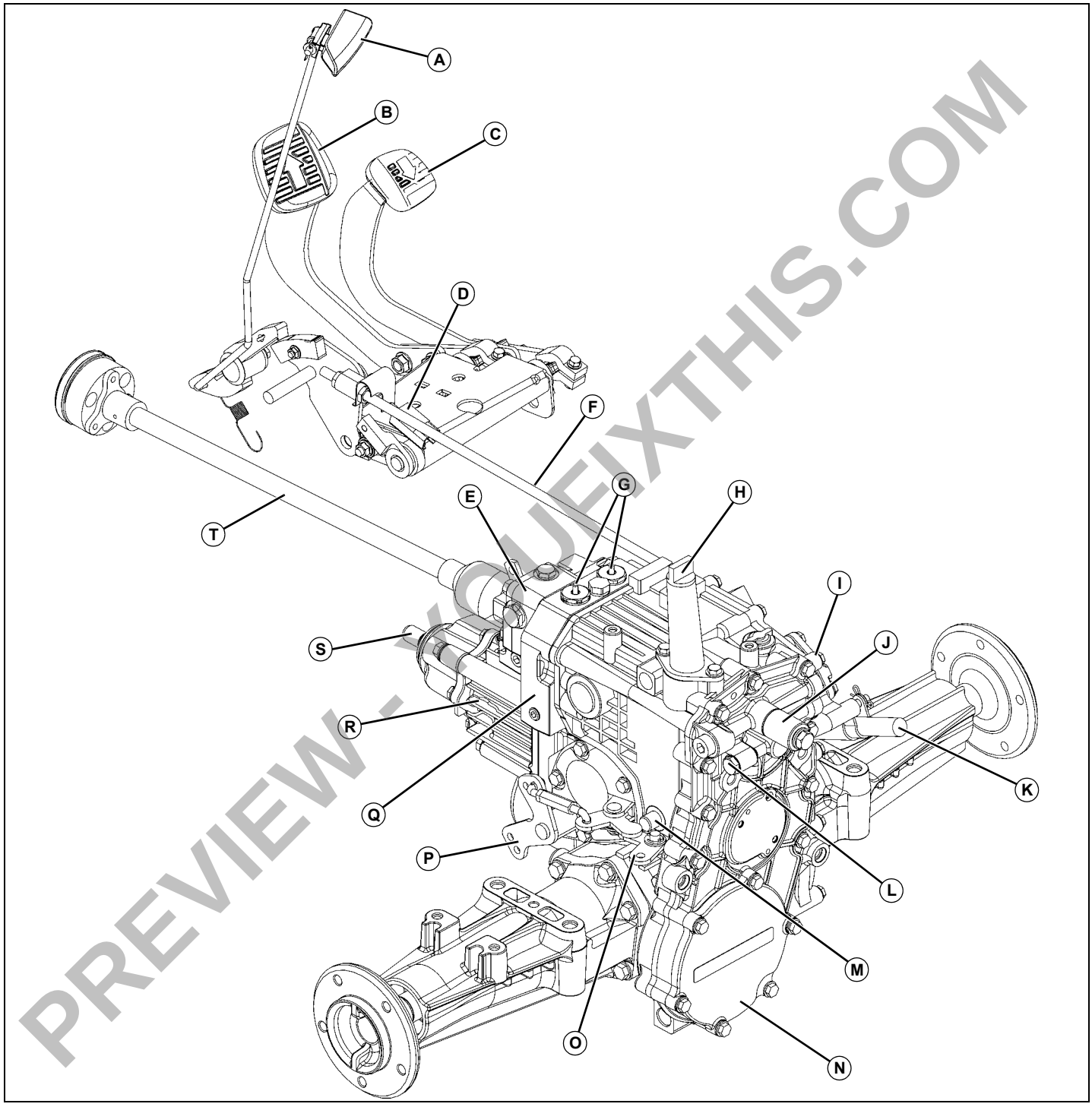

MX14200

PREVIEW - YOUFIXTHIS.COM

Download full manual at youfixthis.com

Disassembly, Inspection and Assembly:

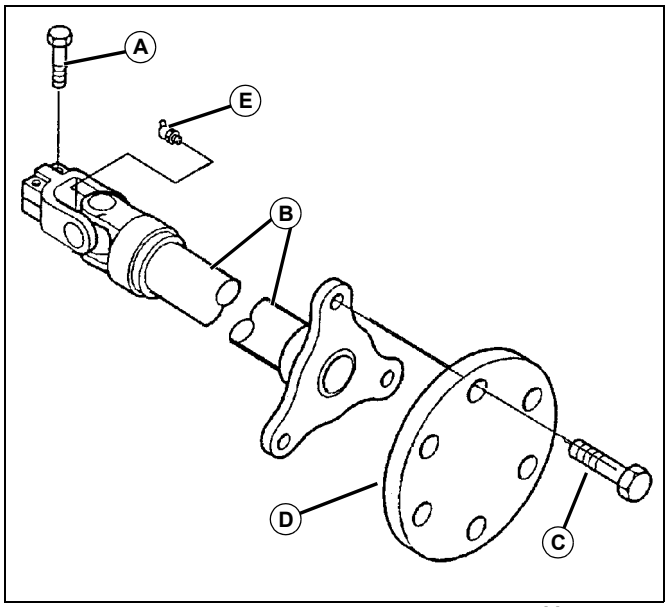

M81172ae

A - Cap Screws (2 used)
B - Drive Shaft
C - Cap Screws (3 used)
D - Isolator
E - Lube Fitting

1. Disassemble drive shaft.
2. Inspect U-joint for wear.
3. Inspect isolator for cracks or wear.
4. Install isolator with bosses toward drive shaft.
5. Assemble drive shaft.

Installing:

1. Install drive shaft from under frame and attach to transaxle pump shaft.
2. Raise front of drive shaft to engine pulley and tighten cap screws (C) to **40 N•m (30 lb-ft)**.
3. Tighten two cap screws (A).

PTO Solenoid Valve

Removal and Installation:

IMPORTANT: Avoid damage! Do not bend, twist or damage solenoid armature. Do not damage machined surfaces or sharp edges of spool or sleeve. PTO will not function or will function erratically if spool, sleeve or armature is damaged.

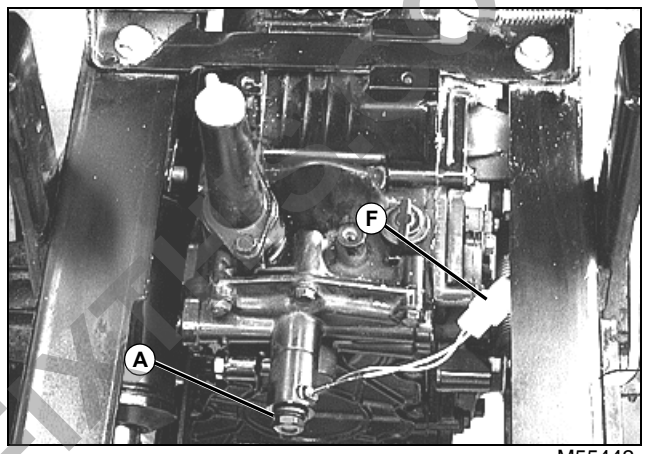

M55442

1. Disconnect solenoid connector (F) from wiring harness.
2. Remove nut (A) and O-ring (B).

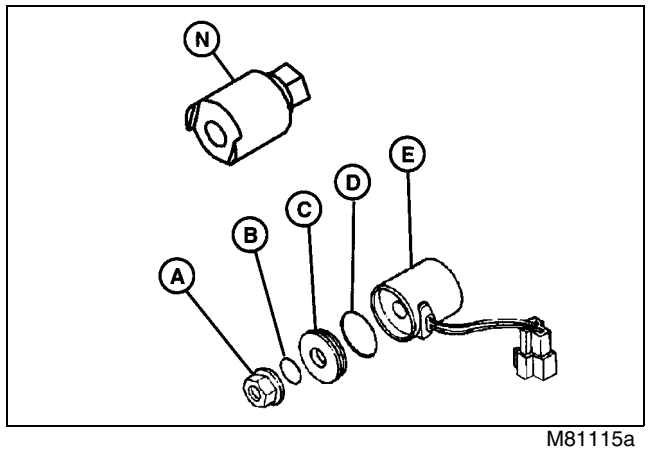

M81115a

NOTE: Nut (A) and O-ring (B) were already removed in step 2.

3. Remove solenoid cover (C), O-ring (D), and solenoid coil (E). Note order and direction of valve components for reassembly.
4. Remove solenoid armature assembly using JDG757A Solenoid Valve Socket (N).
5. Carefully remove valve components from PTO cover.

NOTE: Check bottom of bore for "wave" washer.

6. Clean and inspect parts for damage. Replace if

Download full manual at youfixthis.com

PREVIEW - YOUFIXTHIS.COM

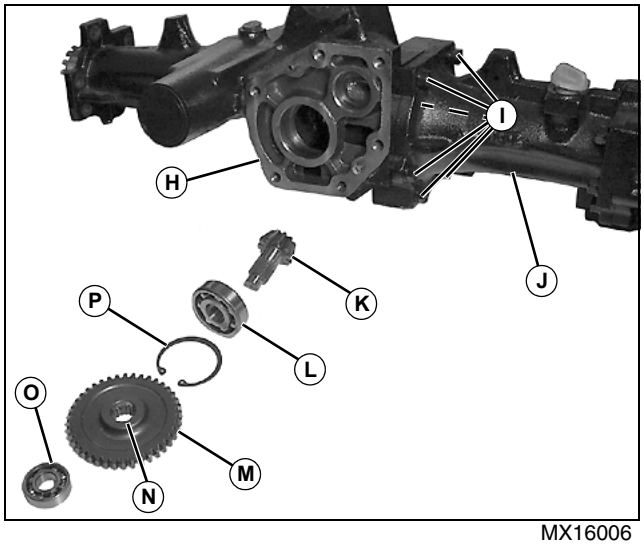

MX16006

5. Install the bearing (L) to the input pinion shaft (K), with writing/numbers facing the transfer gear (M).

6. Install the input pinion shaft (K) to the differential housing (H).

7. Install the large snap (P) ring to the differential housing.

8. Install transfer gear (M), with raised flange (N) towards input pinion shaft (K).

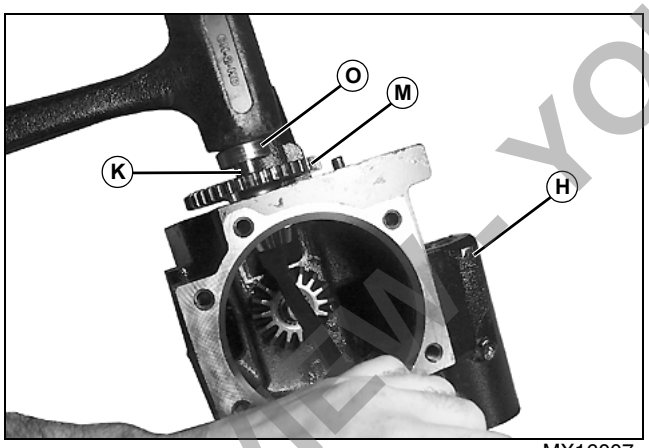

MX16007

9. Install the upper bearing (O) to the input pinion shaft (K) until it contacts the splines of the input pinion shaft. Support the bottom of the input pinion shaft during installation.

10.Lubricate the bearings and gears. Seal the input housing.

11.Install the input housing (I) to the differential housing (H).

12.Fill the housing with approved gear lube.

NOTE: The MFWD and axle housing fill very slowly. It may be necessary to open the drain plug to allow for a faster fill. BE CERTAIN to tighten the drain plug as soon as the gear lube reaches the drain hole. Allow the entire amount of gear lube to fill the housing.

Front Axle Housing Disassembly and Assembly

Disassembly/Inspection:

1. Drain the differential and final drive housings, and remove the MFWD from the machine. (See “Mechanical Front Wheel Drive Removal and Installation - (MFWD)” on page 423.)

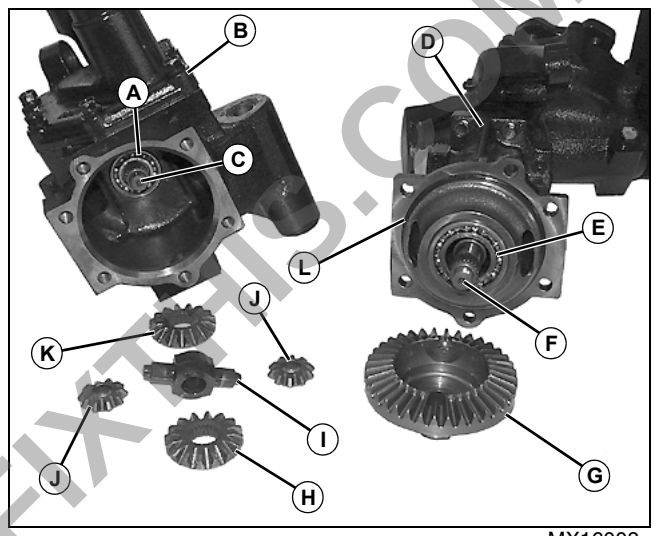

MX16008

2. Separate the right axle housing (D) from the differential housing (B).

3. Remove the bevel pinion gears (J), bevel pinion shaft (I) and bevel gear (K) from the left axle (C).

4. Remove the ring gear (G) and bevel gear (H) from right axle housing (D).

5. Remove O-Ring (L) from right axle housing.

NOTE: Note any writing/numbers on bearings and assemble with correct orientation.

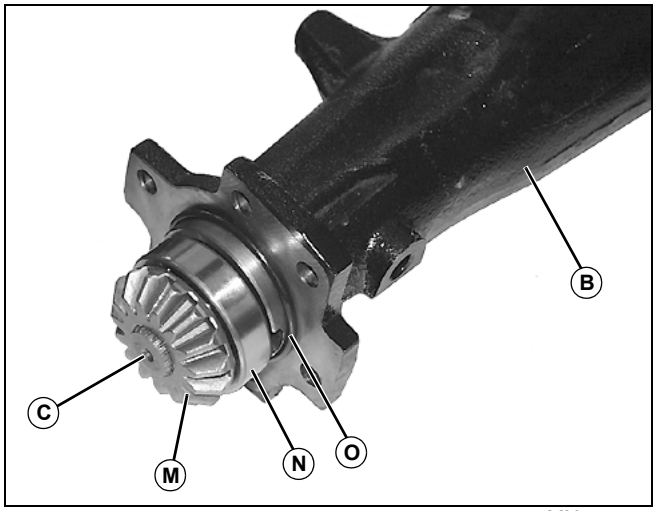

MX16009

Download full manual at youfixthis.com

Steering Cylinder Removal and Installation

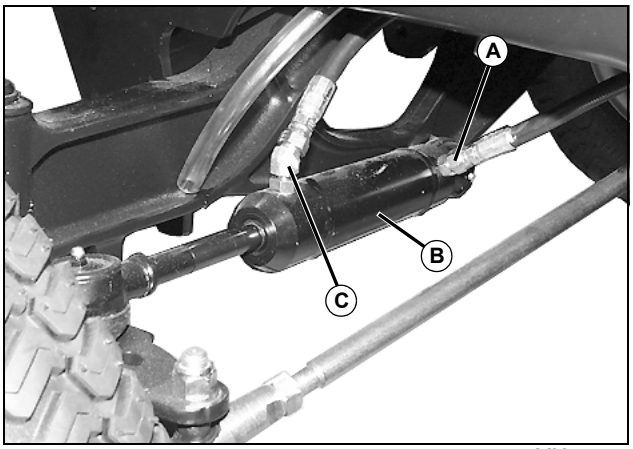

MX11934

1. Disconnect hydraulic hose (C) and loosen hose (A) from steering cylinder (B).

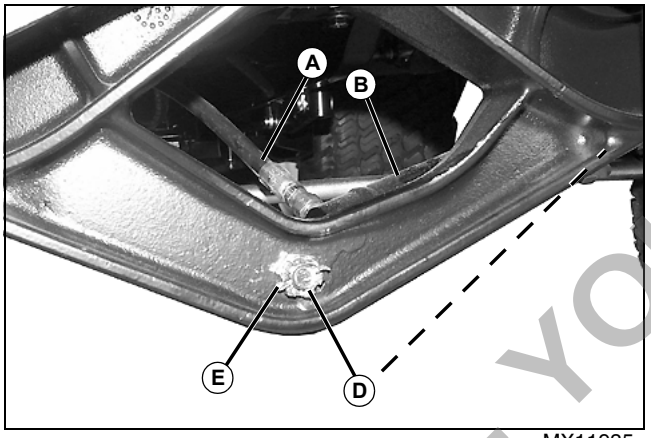

MX11935

2. Remove cotter pin (E) and nut (D) from each end of steering cylinder.

NOTE: Cylinder ball joint ends are tapered. Use a forked tool or soft-faced hammer to loosen stud ends.

3. Remove steering cylinder and disconnect cylinder (B) from hose (A).

4. Replace steering cylinder if necessary.

5. Connect steering cylinder (B) to hose (A) and tighten hose to **16 N•m (144 lb-in.)**.

6. Install steering cylinder (B) to spindle arm and through axle housing.

7. Install nuts (D) and tighten to **33 N•m (24 lb-ft)**. Tighten nut to insert cotter pins (E).

8. Connect hydraulic hose (C) and tighten to **16 N•m (144 lb-in.)**.

9. Bleed the steering system.

Front Axle Removal and Installation

1. Engage park brake.

2. Remove hood. (See “Hood Removal and Installation” in the Miscellaneous section.)

3. Remove battery.

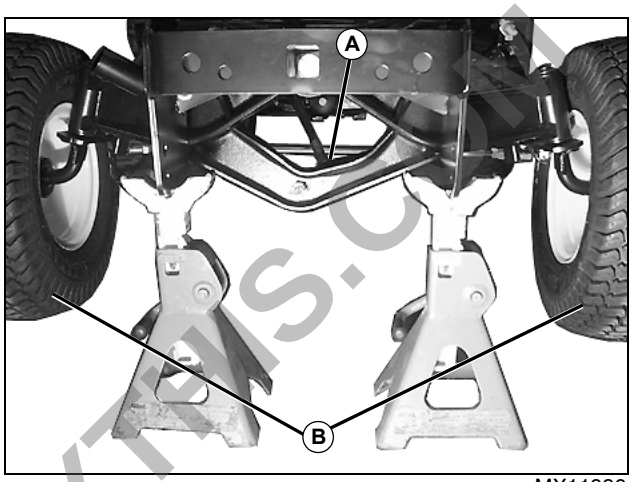

MX11936

4. Lift front of machine until front wheels (B) are off the ground. Install jack stands.

5. Remove two front wheels.

6. Remove steering cylinder (A) without disconnecting hydraulic lines. (See “Steering Cylinder Removal and Installation” on page 474.)

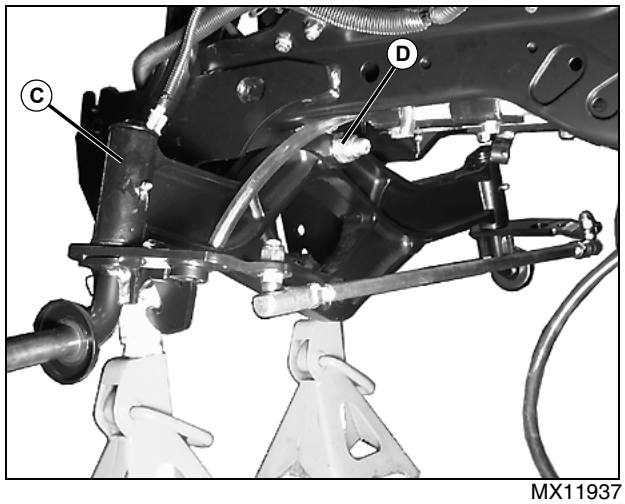

MX11937

2-Wheel steer Shown; All wheel steer similar

7. Install a lift or hoist on axle. Remove lock nut (D) and bolt to remove front axle assembly (C).

8. Repair or replace axle assembly.

9. Apply multi-purpose grease to pivot bushings in axle assembly.

10.Lift axle assembly into position, while making sure machine frame fits between head of guide bolts and axle.

Download full manual at youfixthis.com

PREVIEW - YOUFIXTHIS.COM

Assembly 62C:

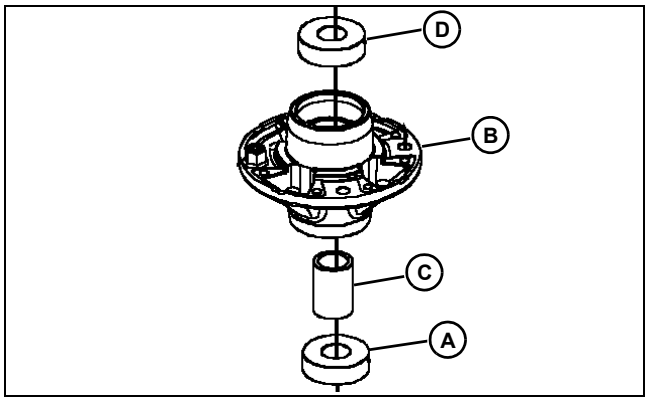

MP29644b

1. Using a press and disk driver large enough to contact the bearing outer race, install lower bearing (A) until it is seated against the shoulder in the housing (B).

2. Turn the housing over.

3. Install spacer (C). Center the spacer over the lower bearing.

IMPORTANT: Avoid damage! Using disk drivers, support both the inner and outer races of the upper and lower bearings when installing the upper bearing. Do not support the housing by allowing it to rest on its end.

4. Using a press and disk driver, install upper bearing (D) until it rests against the bottom of the housing shoulder.

NOTE: The inner diameter chamfer of the seal ring is away from the bearing.

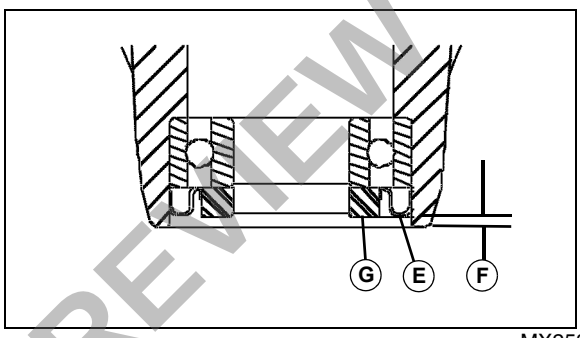

MX2537

5. Using a press and disk, install lower seal (E) with open side toward bearing until the face of the seal is at the specified height (F) from the lower end of the housing.

6. Install lower seal ring (G) with the outer diameter chamfered edge toward bearing.

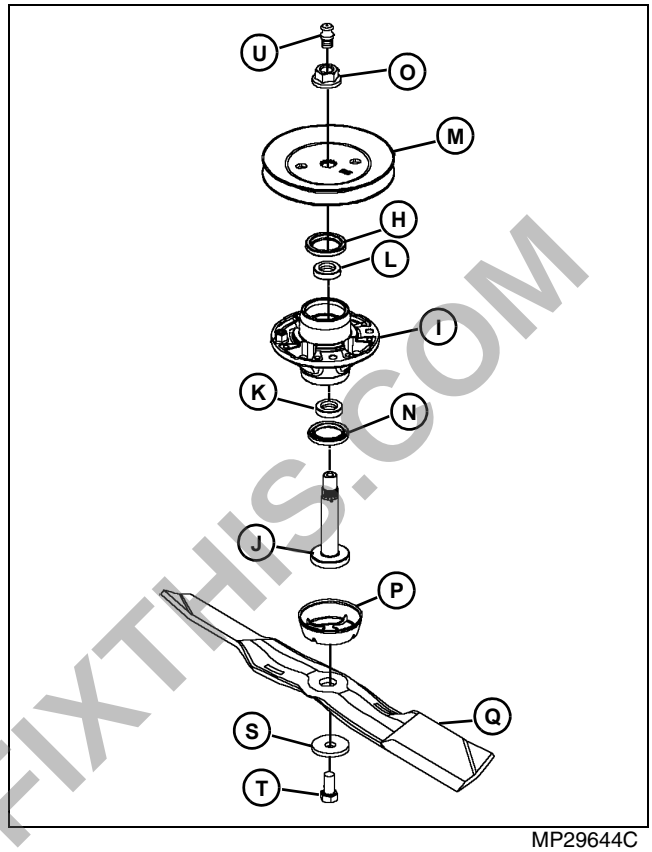

MP29644C

7. Install bushing (L).

8. Using a press and disk, install upper seal (H) and lower seal (N) with open side toward bearing until the face of the seal is flush with the end of the housing (I).

9. Install spindle shaft (J) into housing.

10. Install bushing (K) and sheave (M).

11. Install flanged nut (O).

IMPORTANT: Avoid damage! Blade (Q) must be properly seated on the spindle, and concave side of blade washer (R) MUST face toward blade.

12. Install lower deflector (P), blade (Q), and washer (S) and cap screw (T).

13. Tighten blade cap screw to **320 N•m (236 lb-ft)**.

14. Place blade in a soft-jawed vise.

15. Tighten flange nut to specification.

16. Loosen blade cap screw and retighten to specification.

17. Apply specified grease to lubrication fitting (U).

PREVIEW - YOUFIXTHIS.COM

Download full manual at youfixthis.com

PREVIEW ONLY

You're viewing 25 of 576 pages

The full manual includes:

- All 576 pages, complete
- Searchable PDF (find any keyword)
- No watermarks
- Instant download
- Print-ready quality

GET FULL MANUAL NOW

John Deere X465, X475, X485, X575, X585 Technical Manual

Scan or click anywhere
youfixthis.com

Click anywhere on this page to get the full manual