X710, X730, X734, X738, X739 Tractors (SN. 040001-) Diagnostic and Repair

TECHNICAL MANUAL

North American models X710, X730, X734, X738, X739 (SN. 040001-)

TM142319 16 FEB 16 (ENGLISH)

For complete service information also see:

Machine Connection Information	CTM441

John Deere Commercial and Consumer Equipment Lawn and Garden
Pinted by Belgreen

TM142319

PREVIEW - YOUFIXTHIS.COM

Download full manual at youfixthis.com

Table of contents

FOREWORD
Section 10 - GENERAL INFORMATION
Group 05 - Safety
Group 10 - General Specifications
Group 20 - Fuel and Lubricants
Group 30 - Machine Specifications
Section 20 - ENGINE REPAIR
Group 10 - Engine
Group 20 - Cooling System
Group 30 - Fuel and Air System
Section 30 - ELECTRICAL REPAIR
Group 10 - Battery, Starting Motor and Alternator
Group 20 - Wiring Harnesses
Section 40 - POWER TRAIN REPAIR
Group 10 - Controls and Charge Pump
Group 20 - Transaxle
Group 30 - Differential
Group 40 - HFWD
Group 50 - PTO Repair
Section 50 - STEERING AND BRAKE REPAIR
Group 10 - Steering
Group 20 - Brakes
Section 60 - HYDRAULICS REPAIR
Group 10 - Hydraulics
Section 70 - ATTACHMENT REPAIR
Group 10 - Attachments
Section 80 - MISCELLANEOUS REPAIR
Group 10 - Miscellaneous
Section 90 - OPERATOR'S STATION REPAIR
Group 10 - Operator's Station
Group 20 - Component Location
Section 220 - ENGINE OPERATION, TESTS, AND ADJUSTMENTS
Group 10 - Component Location
Group 20 - Theory of Operation
Group 30 - Diagnosis
Group 40 - Tests and Adjustments
Section 230 - ELECTRICAL SYSTEM OPERATION, TESTS, AND ADJUSTMENTS
Group 10 - Component Location
Group 20 - Theory of Operation
Group 30 - Schematics
Group 40 - Diagnosis
Group 50 - Tests and Adjustments
Group 60 - Connectors
Group 70 - Electronic Control Units
Group 80 - Diagnose DTCs, ICC
Section 240 - POWER TRAIN OPERATION, TESTS, AND ADJUSTMENTS
Group 10 - Component Location
Group 20 - Theory of Operation
Group 30 - Diagnosis
Group 40 - Tests and Adjustments
Section 250 - STEERING AND BRAKE OPERATION, TESTS, AND ADJUSTMENTS
Group 10 - Component Location

PREVIEW - YOUFIXTHIS.COM

Download full manual at youfixthis.com

Group 05 - Safety

Recognize Safety Information



Safety-alert symbol

This is a safety-alert symbol. When you see this symbol on your machine or in this manual, be alert to the potential for personal injury.

Follow recommended precautions and safe operating practices.

Understand Signal Words



Signal Words

A signal word—DANGER, WARNING, or CAUTION—is used with the safety-alert symbol. DANGER identifies the most serious hazards.

DANGER or WARNING safety signs are located near specific hazards. General precautions are listed on CAUTION safety signs. CAUTION also calls attention to safety messages in this manual.

Handle Fuel Safely—Avoid Fires

PREVIEW - YOUFIXTHIS.COM

Download full manual at youfixthis.com

Group 30 - Machine Specifications

Machine Specifications

→NOTE:

Specifications and design subject to change without notice.

General Specifications

	X710,	X730, X734, X738, X739
Ground Speed:		
Forward	0—13.7 km/h (0—8.5 mph)	
Reverse	0—8.1 km/h (0—5.0 mph)	

— **Engine:**		
Make	Kawasaki	
Engine Power Information		
Engine Model	FD671D	FD750D
Oil Capacity (with filter)	1.8 L (1.9 qt)	
Displacement	745 cm ^{3} (45.5 in ^{3})	745 cm ^{3} (45.5 in ^{3})
Bore	78 mm (3.07 in)	78 mm (3.07 in)
Fuel Delivery	Electric Pump, Carburetor	Electric Pump, Fuel Injected
Coolant Capacity	4.0 L (4.2 qt)	
High Idle, no load	3550 ±50 rpm	
Low Idle, no load	1600 ±50 rpm	
Engine Oil	John Deere Plus-50 ™ II	
Engine Coolant	John Deere Cool-Gard ™ II	

Fuel System:	
Type	Gasoline
Fuel Tank Capacity	19.7 L (5.2 gal)

Electrical System:	
Type	12 Volt Negative Ground
Battery	12 Vdc 300 CCA
Charging System	Stator, 20 A

Power Train:	
Type	Hydrostatic Pump
Drive	Hydrostatic
Brakes	Internal Wet Disc
Rear PTO (if equipped)	540 rpm
Two-Wheel Steer Transaxle (with filter) Capacity	6.6 L (7.0 qt)
Four-Wheel Steer Transaxle (with filter) Capacity	5.6 L (6.0 qt)
HFWD System Transaxle (2 wheel steer) (with filter) Capacity	6.8 L (7.2 qt)
HFWD System Transaxle (4 wheel steer) (with filter) Capacity	6.8 L (7.7 qt)
Transmission Oil	John Deere Low Viscosity HY-GARD™ J20D

Serial Number Location

When ordering parts or submitting a warranty claim, it is IMPORTANT that you include the mower product identification number and the component serial numbers.

The locations of mower identification number and component serial numbers are shown.

PREVIEW - YOUFIXTHIS.COM

Download full manual at youfixthis.com

Metric Cap Screw Torque Values—Grade 7

→NOTE:

When bolting aluminum parts, tighten to 80% of torque specified in table.

Metric Cap Screw Torque Values—Grade 7

Size	N˙m	(lb-ft)
M6	9.5—12.2	(7—9)
M8	20.3—27.1	(15—20)
M10	47.5—54.2	(35—40)
M12	81.4—94.9	(60—70)
M14	128.8—146.4	(95—108)
M16	210.2—240	(155—177)

PREVIEW - YOUFIXTHIS.COM

Download full manual at youfixthis.com

Disassemble and Assemble Charge Pump

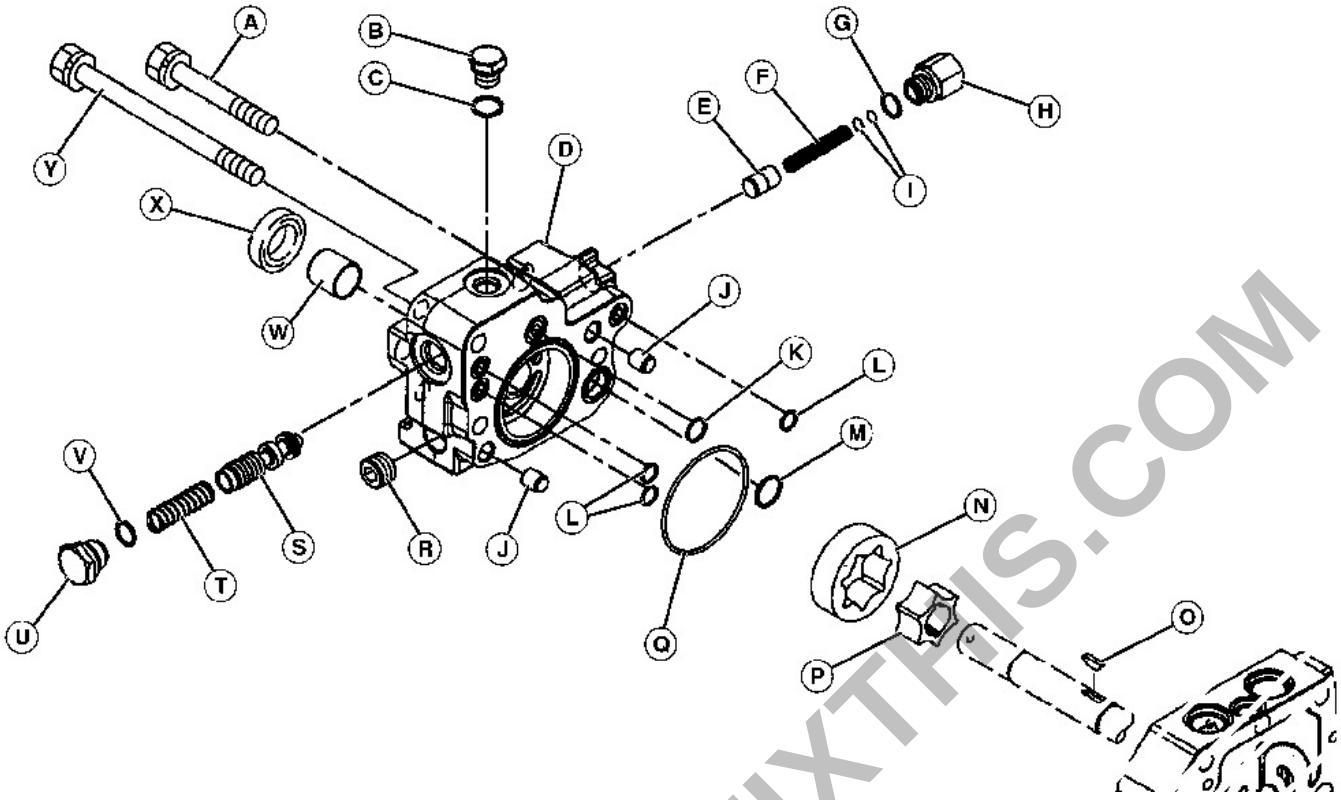

Charge Pump—Exploded View

LEGEND:

A	Cap Screw (2 used), M10 x 65
B	Plug
C	O-Ring
D	Pump Body
E	Pressure Valve
F	Spring
G	O-Ring
H	Plug
I	Shims (2 used)
J	Pin
K	O-Ring
L	O-Rings (3 used)
M	O-Ring
N	Outer Rotor
O	Key
P	Inner Rotor
Q	O-Ring
R	Plug
S	Reducing Valve
T	Spring
U	Reducing Plug
V	O-Ring
W	Bushing
X	Seal
Y	Cap Screw, M10 x 105

→NOTE:

Charge pressure control valve and pressure reducing valve can be removed when the charge pump is in the machine. To inspect valve seats and bores, the pump must be removed.

[1] - Disassemble all parts of charge pump (D).

[2] - Inspect O-rings (C, K, L, M, and Q) for cuts or damage. Replace as necessary.

[3] -

PREVIEW - YOUFIXTHIS.COM

Download full manual at youfixthis.com

Main Wiring Harness, X710

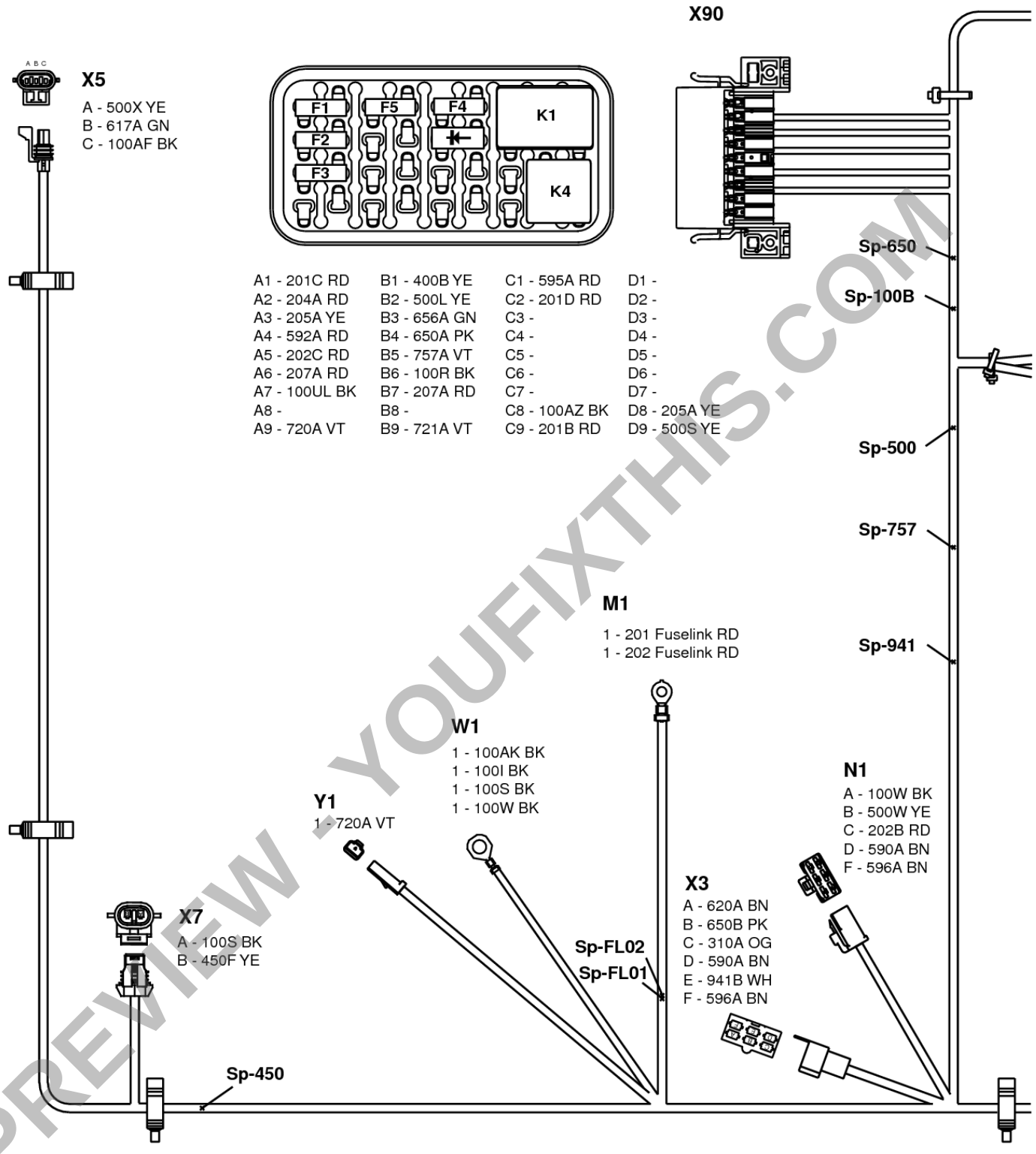

PREVIEW - YOUFIXTHIS.COM

Harness 1 of 3

LEGEND:

X3	Engine Harness Connector
X5	Front Implement Connector
X7	Headlights Connector
X90	Load Center
M1	Start Motor Connector
N1	Voltage Regulator Connector
W1	Ground Terminal
Y1	Start Motor Solenoid Connector

Download full manual at youfixthis.com

ICC Pinout

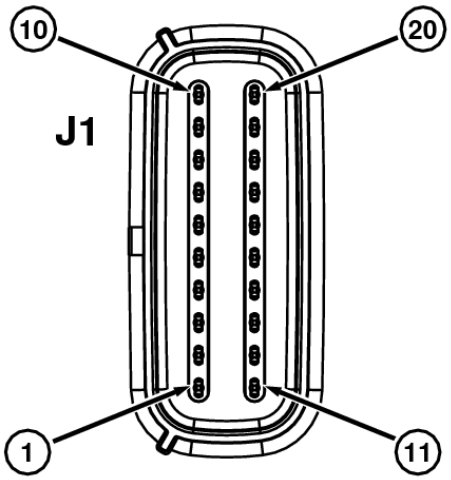

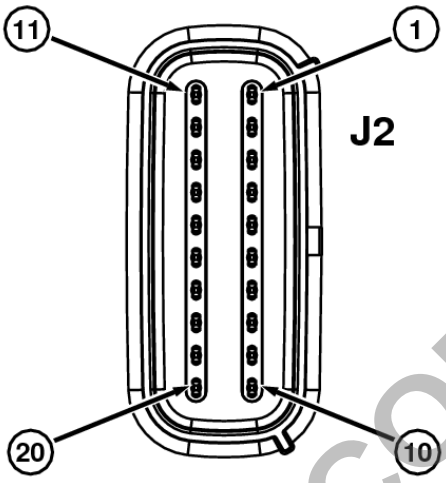

Instrument Cluster Controller (ICC)

PREVIEW - YOUFIXTHIS.COM

Download full manual at youfixthis.com

Cooling System Operation

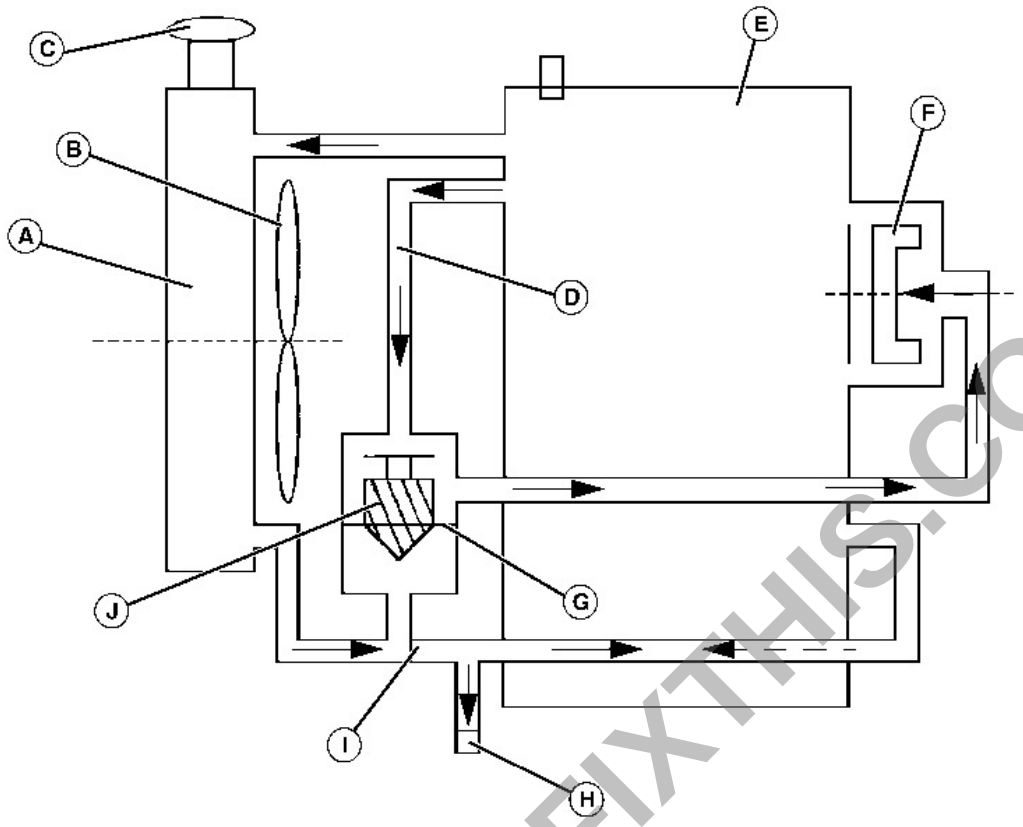

Cooling System

LEGEND:

A	Radiator
B	Cooling Fan
C	Radiator Cap
D	Thermo Switch
E	Bypass Tube
F	Engine Body
G	Water Pump (Impeller)
H	Jiggle Valve
I	Drain Plug
J	Valve, One Way
K	Thermostat

Function:

The coolant pump circulates coolant through the cooling system, drawing hot coolant from the engine block, and circulating it through the radiator for cooling.

System Operation:

The impeller-type coolant pump draws coolant from the bottom of the radiator when the thermostat is open, or from the bypass when the thermostat is closed. Coolant from the water pump flows to the water jackets in block, up through cylinder heads, intake manifold, past the coolant temperature sensor and thermostat.

When the engine temperature is below approximately 82°C (180°F), the thermostat is closed and coolant is directed back to the water pump through bypass hose to be recirculated. This allows the engine to warm up to operating temperature quickly.

When the engine temperature is approximately 82°C (180°F), the thermostat begins to open and is fully open at 95°C (203°F). Coolant from the water jackets and cylinder heads now flow through the thermostat to the radiator, which is cooled by the radiator fan. The fan is driven by a belt off the crankshaft pulley. As the engine coolant temperature rises, a variable resistance sensor sends a signal to the control panel. The control panel temperature gauge operates from the sensor.

The radiator cap maintains pressure of 78—98 kPa (11.3—14.2 psi) inside the radiator, which actually raises the boiling point of the coolant. The radiator cap contains a pressure valve and a vacuum valve. When the coolant is hot and pressure is above 98 kPa (14.2 psi), the pressure valve opens, allowing some coolant to flow to the recovery tank. After the engine is stopped, the

PREVIEW - YOUFIXTHIS.COM

Download full manual at youfixthis.com

Group 80 - Diagnose DTCs, ICC

Readings Overview

→NOTE:

Some signals do not apply to all applications. However, circuits, DTCs, and readings may be present.

The readings, displayed in Service ADVISOR ™ , are shown live - for example: voltages, temperatures, and positions, These are shown for reference, diagnostics, adjustment, or calibration purposes.

It is recommended that Service ADVISOR ™ is used to take readings as multiple components can be checked simultaneously. The display panel can display few readings.

PREVIEW - YOUFIXTHIS.COM

Download full manual at youfixthis.com

Group 30 - Diagnosis

Diagnose Engine Starting Problems

66

CAUTION:

Avoid Injury! Keep away from all moving parts when testing. The engine may start to rotate at any time.

→NOTE:

To test specific electrical components, see Electrical section and refer to either Diagnostics or Tests and Adjustments for further guidance.

Symptom	Problem	Solution
Engine Starting Problem	Engine will not crank?	a. Battery weak or discharged.
		b. Fusible link defective.
		c. Check key switch or wiring.
		d. Starter solenoid defective.
		e. Starter motor defective.
	Engine will not start; plug wet?	a. Mixture too rich.
		b. Clean under engine shrouding. Check spark plug gap and spark (see Electrical section).
		c. Inlet needle and seat sticking (FD671D engine).
		d. Clean carburetor (FD671D engine).
	Engine is hard to start when cold?	a. For additional tests (See “Engine Tests”.)
		b. Mixture too rich.
		c. Mixture too lean.
		d. Clean under engine shrouding.
		e. Choke is not completely shut, adjust choke (FD671D engine).
		f. Inlet needle and seat sticking (FD671D engine).
		g. Clean carburetor (FD671D engine).
	Engine cranks but will not start?	a. Battery weak or discharged.
		b. Fuel shut-off valve closed (in-line valve).
		c. Fuel shut-off solenoid not allowing fuel into main jet (FD671D engine).
		d. Fuel shut-off at fuel pump (FD750D engine).
		e. Improper use of choke (FD671D engine).
		f. Float level too high (FD671D engine).
		g. Weak or faulty spark plug. Check spark (See Electrical section).
		h. Faulty high tension leads.
		i. Faulty ignition module (FD671D engine).
		j. Faulty fuel injection module (FD750D engine).
		k. Faulty ignition coil.
		l. Faulty pulsar coil.
		m. Contaminated fuel or faulty fuel supply system.
		n. Defective fuel pump.
		o. Air being drawn in through a hole in fuel line(s).
		p. Clogged fuel line, filter, or tank vent.
		q. Air filter restricted.
		r. Defective head gasket.
		s. Cylinder head loose or warped.
		t. Broken valve spring.

PREVIEW - YOUFIXTHIS.COM

Download full manual at youfixthis.com

Power Train - 2WD Hydraulic Schematic

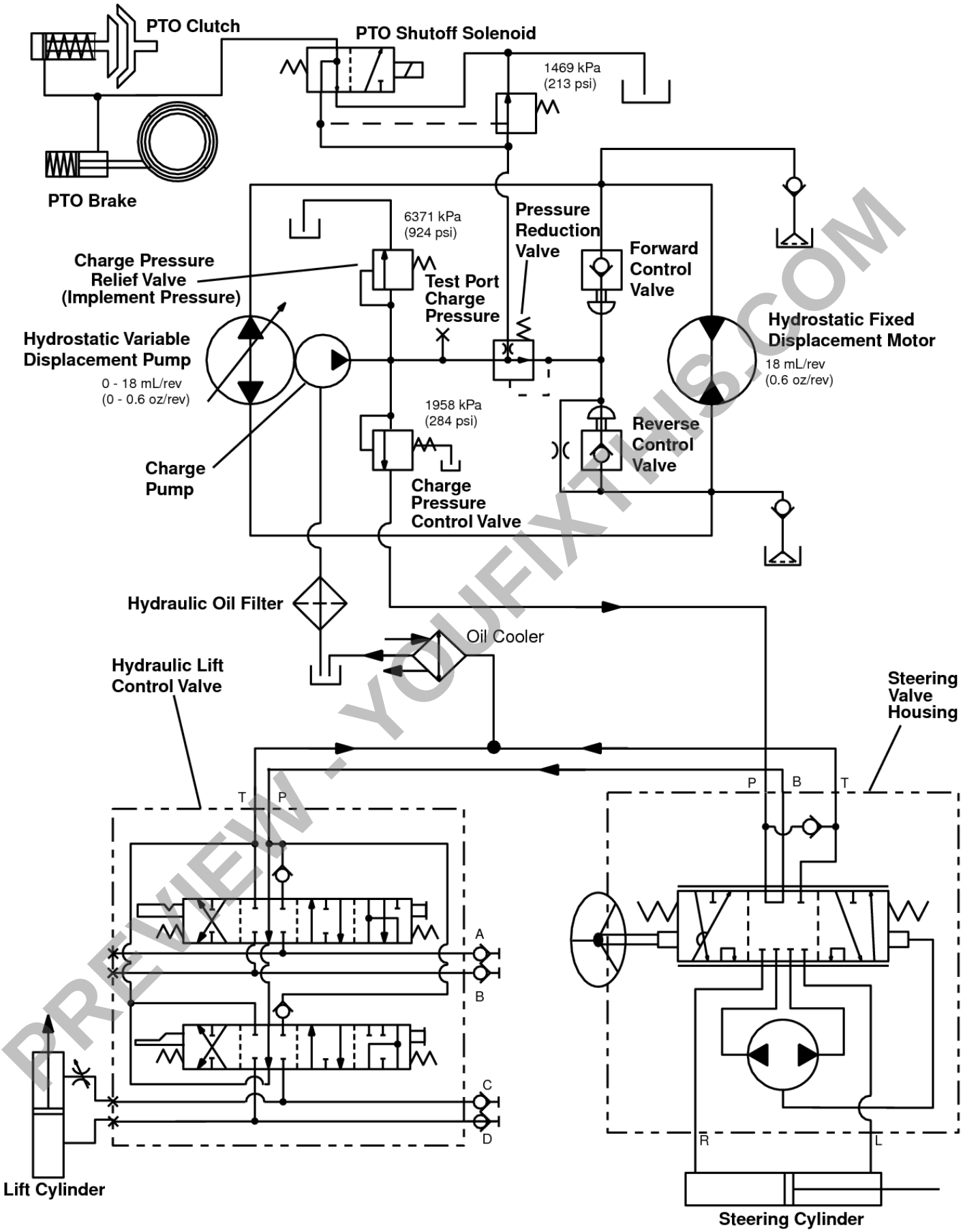

2WD Power Train Hydraulic Schematic

PREVIEW - YOUFIXTHIS.COM

Download full manual at youfixthis.com

Engine Remove and Install

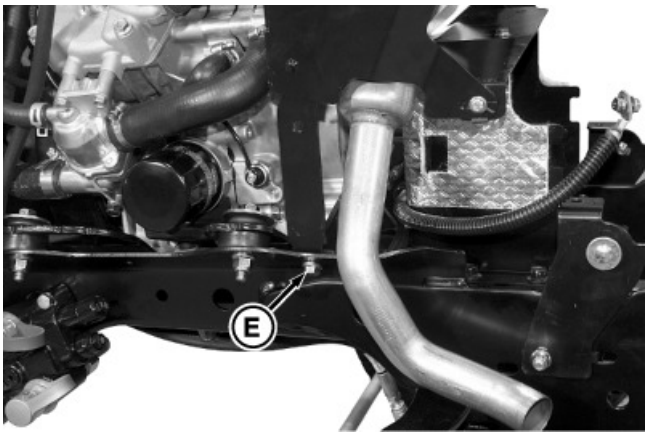

LEGEND:
E Cap Screw

Muffler Heat Shield

Remove:

[1] - Park machine safely. See “Park Machine Safely” in the Safety section.

[2] - Allow engine to cool.

[3] - Remove hood. (See Hood Remove and Install.)

[4] - Remove radiator cap and drain coolant into a clean container.

[5] - Disconnect and remove upper and lower radiator hoses.

[6] - Loosen clamp and remove air cleaner intake hose.

[7] - Remove battery. (See Battery Remove and Install.)

[8] - Remove cap screw (E) securing side bracket of muffler heat shield to frame. Repeat for other side.

[9] -

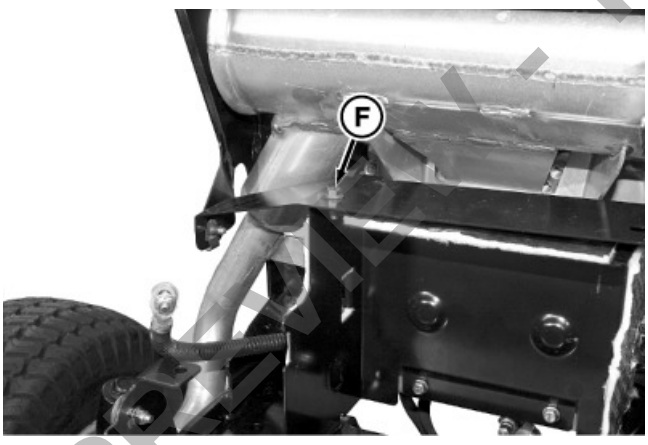

LEGEND:
F Cap Screw

Lower Muffler Heat Shield

Remove cap screw (F) that secures lower muffler heat shield to top of battery heat shield.

[10] - Lift and remove muffler heat shield assembly.

[11] - Separate positive (+) battery cable from clips on back of battery heat shield.

[12] -

PREVIEW - YOUFIXTHIS.COM

Download full manual at youfixthis.com

PREVIEW - YOUFIXTHIS.COM

Download full manual at youfixthis.com

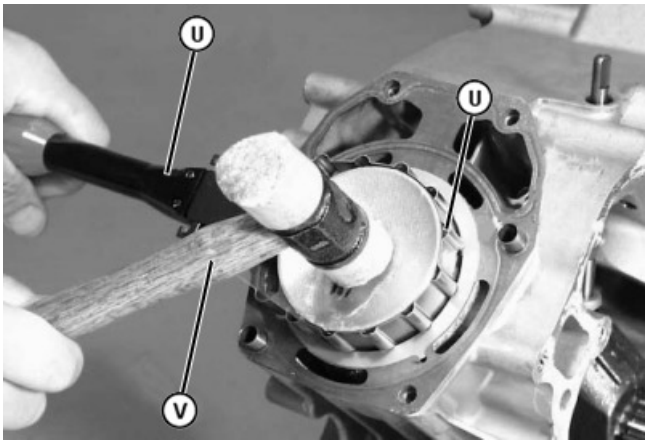

LEGEND:

U	Piston Ring Compression Tool
V	Plastic Mallet

Compress Piston Rings

Use a piston ring compression tool (U) to compress the piston rings.

[11] -

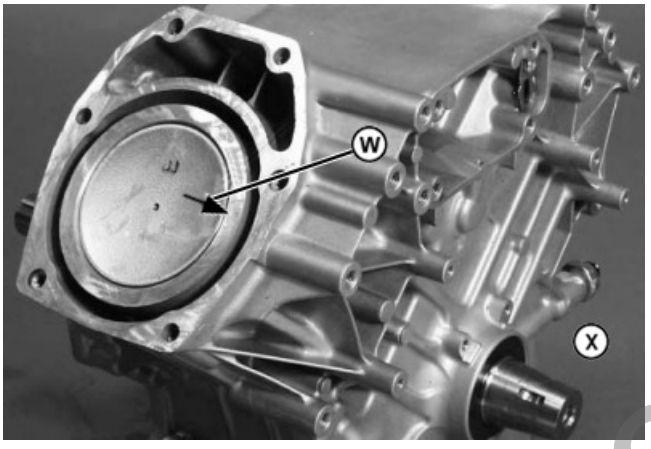

LEGEND:

W	Mark on Piston
X	Flywheel

Insert Piston

Insert the piston and rod assembly in the cylinder bore with the arrow mark on the piston (W) facing the flywheel (X). Lightly tap the top of the piston with a plastic mallet (V) to insert the piston assembly in the bore.

[12] -

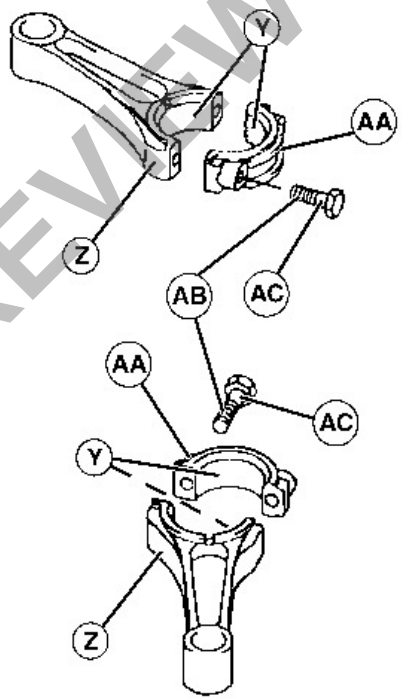

LEGEND:

Y	Connecting Rod Big End Inner Surface
Z	Connecting Rod Big End
AA	Caps
AB	Thread of Cap Bolts
AC	Cap Bolts

Install Connecting Rods

Apply engine oil to the inner surface (Y) of the connecting rod big end (Z) and caps (AA).

PREVIEW - YOUFIXTHIS.COM

Download full manual at youfixthis.com

20 Amp Alternator

Remove:

[1] - Park machine safely. (See Parking Safely in Safety section.)

[2] -

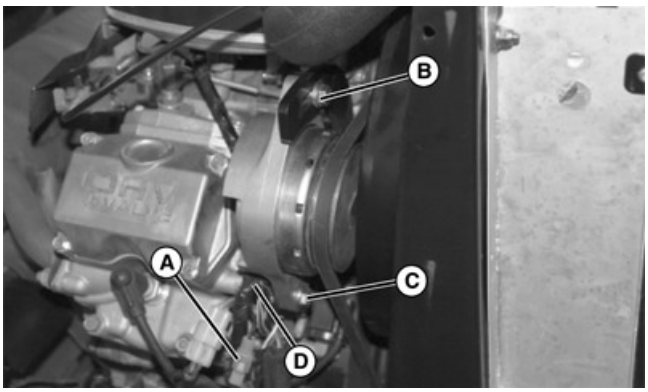

LEGEND:

A	Connector
B	Cap Screw
C	Cap Screw
D	Spacer

Gas Engine Shown

Disconnect alternator electrical connector (A).

[3] - Loosen alternator adjustment cap screw (B). Slide alternator towards engine.

[4] - Remove belt from alternator.

[5] - Remove adjustment cap screw, mounting cap screw (C), and spacer (D).

[6] -

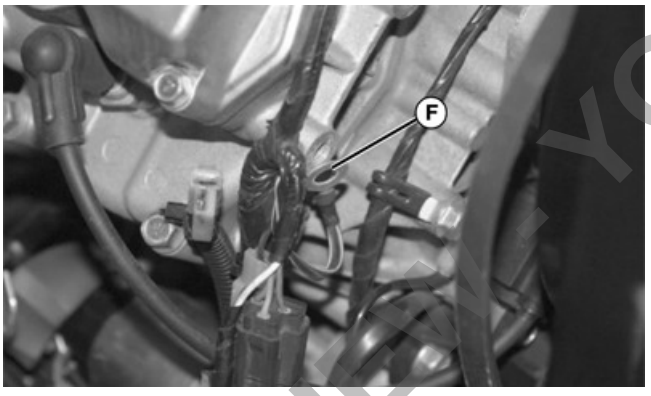

LEGEND:

F	Ground Wire

20 Amp Alternator

Remove alternator from machine. Note location of engine ground wire (F) for reassembly.

Disassemble and Inspect:

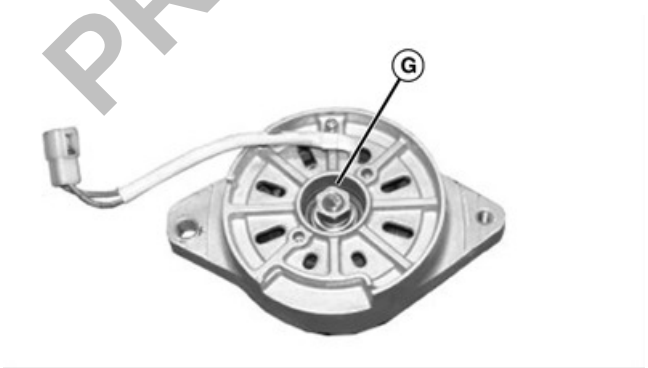

LEGEND:

G	Nut

Alternator

[1] - Remove nut (G), lock washer, and washer from rear of alternator.

PREVIEW YOUFIXTHIS.COM

Download full manual at youfixthis.com

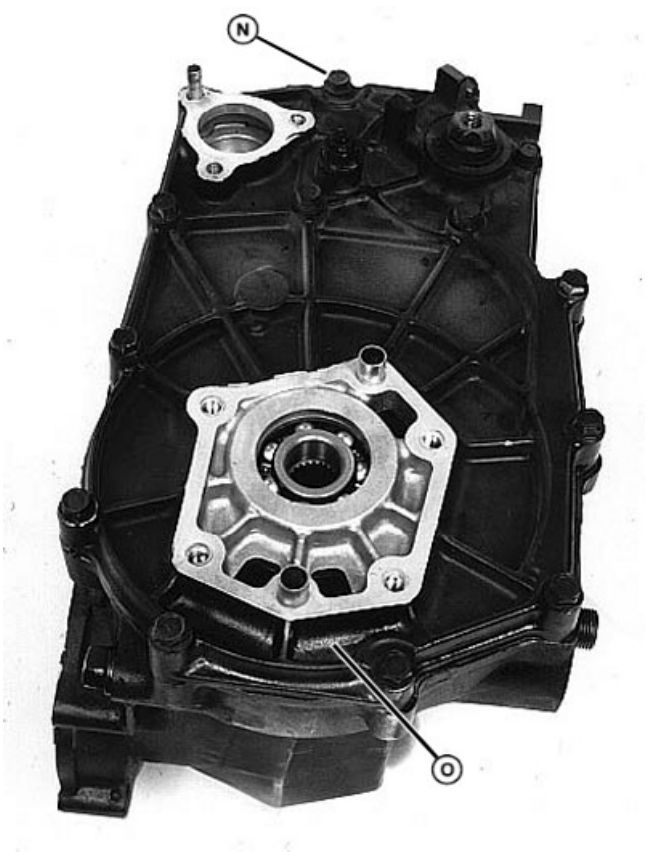

LEGEND:

N	Cap Screw (16 used)
O	Cover Assembly

Transaxle Cover

Lay transaxle on left side and remove cap screws (N) attaching right cover assembly (O).

[11] -

IMPORTANT:

Avoid Damage! Parts located on top of differential assembly are loose. Do not drop or lose parts.

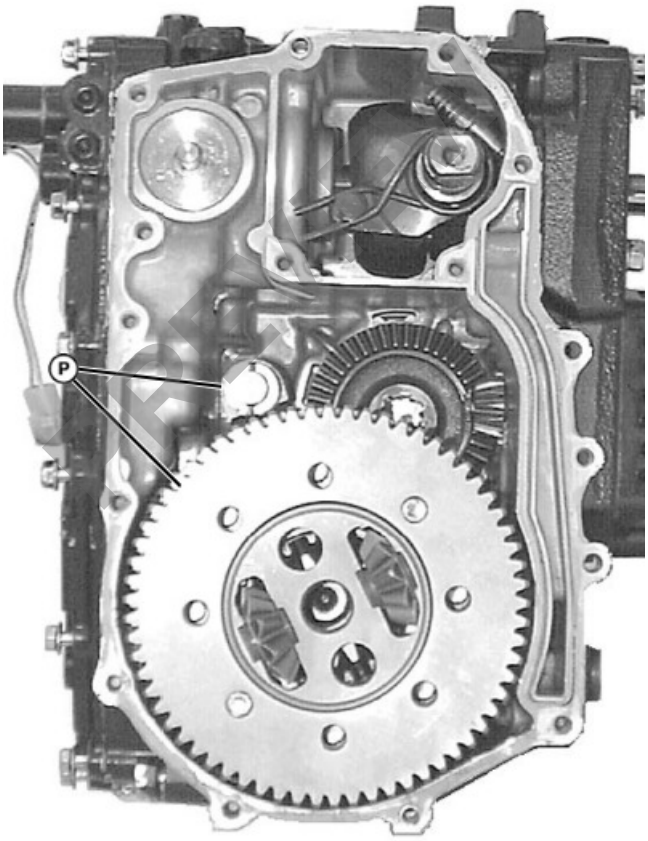

LEGEND:

P	Differential Lock Shaft

YOUFIXTHIS.COM

Download full manual at youfixthis.com

Item	Measurement	Specification
		(18 lb.-ft.)
Transaxle Case Cap Screws: New	Torque	30 N·m
		(22 lb.-ft.)

[10] - Install shifter (AB), PTO shield (X), and hitch plate (Z).

[11] - Connect PTO switch connectors (AA).

[12] - Disconnect PTO solenoid harness (W).

[13] - Install transaxle drain plug. Refill transaxle with John Deere Low Viscosity HY-GARD™ (J20D as required)

Number	Name	Use
• J20D (us)	Low Viscosity HY-GARD™ Oil	Used to fill transaxle.

to cross-hatched area of dipstick.

[14] - Install any additional items removed prior to PTO.

PREVIEW - YOUFIXTHIS.COM

Download full manual at youfixthis.com

→NOTE:

Do not overtighten nut so spring can not return itself, but tight enough so pivot plate does not wobble.

[3] -

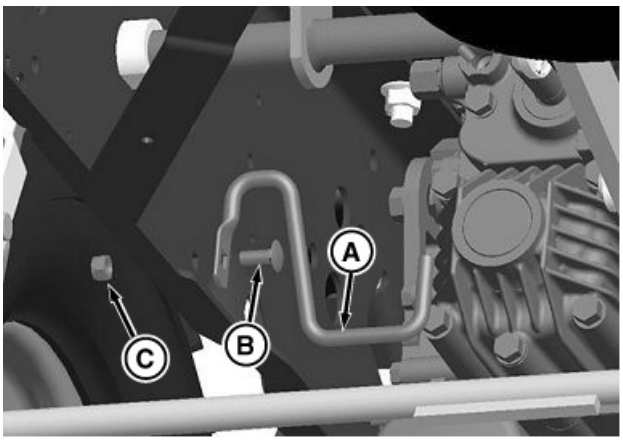

LEGEND:

A	Hanger
B	Carriage Bolt, 5/16"x3/4"
C	Locknut, 5/16"

Install Hanger

Install hanger (A) if removed and secure with 5/16”x3/4” carriage bolt (B) and 5/16” locknut (C).

[4] -

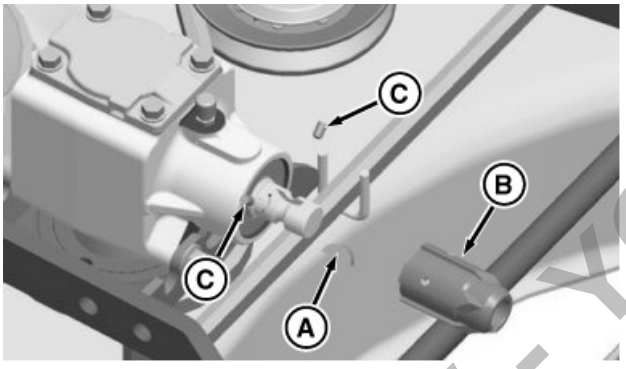

LEGEND:

A	Shaft Key
B	Male Coupler
C	Set Screws, M6

Install Male Coupler

Install shaft key (A) in mower deck gearbox input shaft if removed.

[5] - Slide male coupler (B) onto the gearbox input shaft with shaft key (A) in place and secure with two M6 set screws (C) through male coupler to input shaft.

→NOTE:

Keep approximately a 2 mm (.08 in.) gap between coupler and gearbox.

[6] -

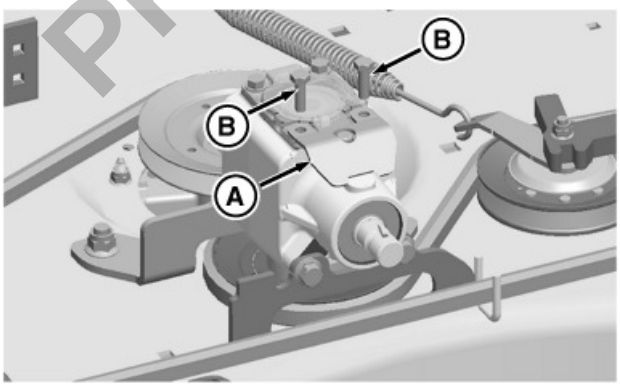

LEGEND:

A	Shield
B	Hex Head Bolts, M8

Install Relief Shield

Install relief shield (A) if removed with two M8 x 25 hex head bolts (B) Tighten bolts to 30 N·m (22 lb.-ft.).

PREVIEW - YOUFIXTHIS.COM

Download full manual at youfixthis.com

Diagnose Engine Air/Fuel System

Initial Checklist

- How old is the fuel?
- Does the fuel have a foul smell?
- Is the fuel cloudy, dark or dirty?
- Is the fuel tank cap air vent clean and open?
- Is a clean, correct air filter installed?
- Has the ignition system been verified?
- Is the air filter attached properly?
- Is the fuel shut-off solenoid operating properly?

→NOTE:

Other engine failures such as plugged exhaust or improper valve clearance can cause symptoms similar to faulty fuel supply. Verify the quality of the engines mechanical and electrical systems.

Rich Air/Fuel Mixture

There are several possible causes of a rich running condition such as: improper or stale fuel, short-tripping, or air filter.

→NOTE:

Verify the ignition system. A rich running condition can have the same symptoms as an improperly operating ignition system.

Improper or Stale Fuel

Poor fuel quality can cause an engine to appear to be running rich. Improper or stale fuel can cause engine components to stick or deteriorate.

Short-Tripping

A common misdiagnosis comes from short-tripping machines (engines that are started for short periods of time). Short-tripping causes the engine to develop black, sooty spark plugs and contamination in the oil. Over time, short-tripping can lead to glazed cylinder walls. To prevent this, every time the engine is started, allow the engine to reach operating temperature and load the machine.

Air Filters

→NOTE:

Late model carburetors are internally vented to meet emissions standards.

When a dirty air filter restricts air flow, the fuel injection automatically compensates to a point. Therefore, a dirty air filter can enrich the air/fuel mixture to the point that performance will drop.

Fuel

Use only fuels recommended in Operator’s Manual:

Use regular grade unleaded fuel with an octane rating of 87 octane or higher. Fuel blends containing up to 10% ethanol or up to 15% MTBE reformulated fuel are acceptable. DO NOT use fuels with more than 10% ethanol (for example, E85 should not be used because it is 85% ethanol and 15% gasoline) or fuels with more than 15% MTBE reformulated fuel, as these products will damage engine and or fuel system. Do not use fuel or additives containing methanol, as engine damage can occur.

All fuel today is formulated for the automotive industry. Fuel is "blended" differently for winter and summer use; regardless of where you are. "Winter" fuel is blended for improved vaporization in colder temperatures. Using left over "Winter" fuel in warmer Spring/Summer temperatures will likely cause vapor locking and surging. Newer carburetors on current production machines, have less tolerance for poor quality fuel because of the tighter specifications required to meet EPA certification.

Fuel Storage

Since it is difficult to know what type of fuel is in different areas, it is best to handle and maintain fuel as outlined below:

[1] - Deteriorated/stale fuel causes gum and varnish. This creates deposits on engine valves and in carburetor jets and passages. This is what causes most of the performance problems.

PREVIEW - YOUFIXTHIS.COM

Download full manual at youfixthis.com

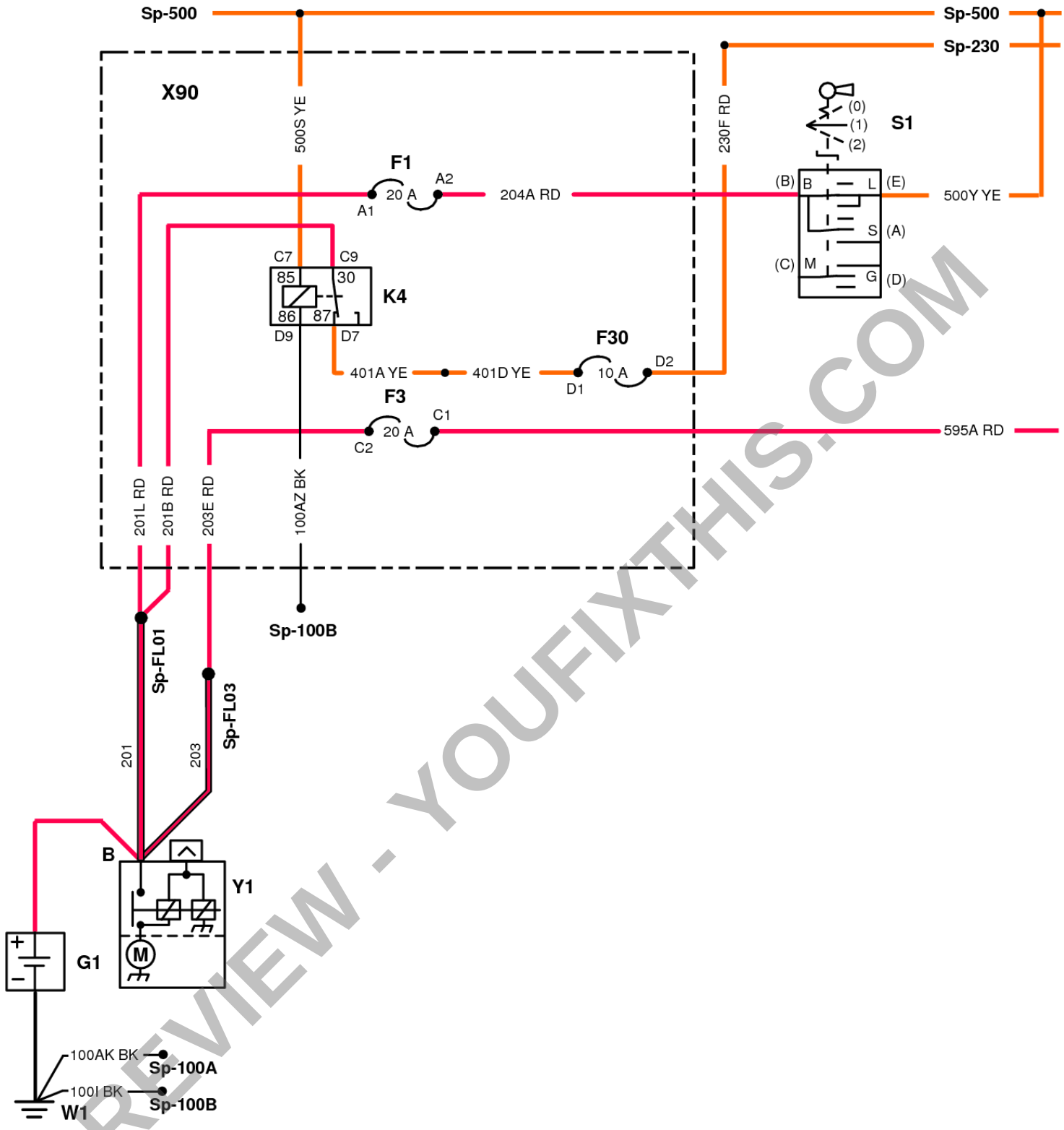

PREVIEW - YOUFIXTHIS.COM

Ignition Circuit Schematic, X730, X734, X738, X739 (1 of 3)

LEGEND:

G1	Battery
K4	EFI Relay
S1	Key Switch
Y1	Start Solenoid
X90	Load Center

Ignition Circuit Schematic (2 of 3)

Download full manual at youfixthis.com

Mid PTO Switch Continuity Test

Lever Position	Terminal Continuity
Top	No Continuity
Middle	No Continuity
Down	Continuity

Rear PTO Switch Continuity Test

Lever Position	Terminal Continuity
Top	Continuity
Middle	Continuity
Down	No Continuity

Fuel Shutoff Solenoid Test—X710

Reason:

To determine if the fuel shutoff plunger retracts when the solenoid is energized.

Equipment:

- 2 jumper wires

Procedure:

[1] - Park machine safely in neutral with park brake locked.

[2] - Raise hood.

[3] -

CAUTION:

Avoid Injury! Keep gasoline away from sparks, flame, or hot engine parts or personal injury can result.

Remove drain screw and spring to drain gasoline from float bowl.

[4] - Disconnect fuel shutoff solenoid connector.

[5] - Remove fuel shutoff solenoid, washer and float bowl.

[6] -

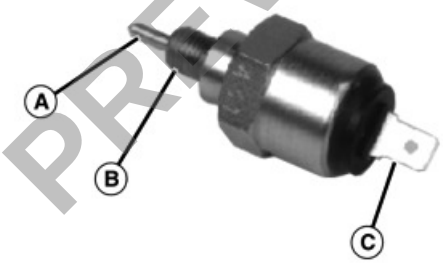

LEGEND:

A	Plunger
B	Threads
C	Terminal

Fuel Shutoff Solenoid

Connect a jumper wire from the battery positive (+) terminal to solenoid terminal (C). It may be necessary to push plunger (A) inward slightly for plunger to retract.

[7] -

→NOTE:

It may be necessary to push plunger (A) inward slightly for plunger to retract.

PREVIEW - YOUFIXTHIS.COM

Download full manual at youfixthis.com

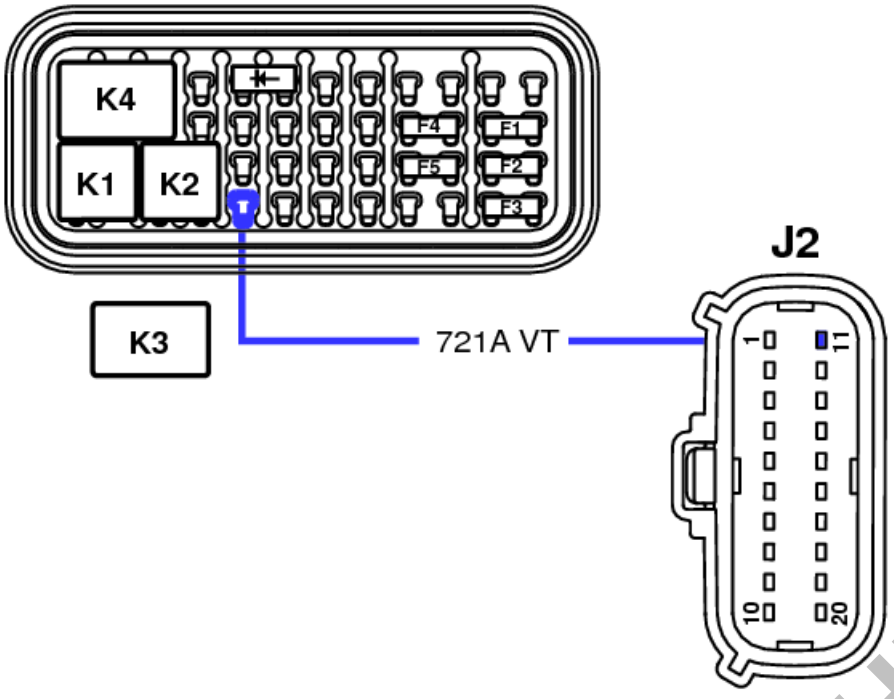

Circuit

With power off, disconnect ICC J2 connector and remove relay. Check for continuity from power wire to relay coil. Is continuity present?

Result:

YES: Check for worn wire insulation.

YES: Go to next step.

NO: Repair wiring.

(2) Relay

Action:

Test relay. (See Relay Test.) Does relay test OK?

Result:

YES: Go to next step.

NO: Replace relay.

(3) ICC

Action:

After resetting the code, does the code re-appear?

Result:

YES: Reload ICC payload. (See Approved Software for Control Units).

YES: Replace ICC.

NO: End of tests.

ICC 000677.14 (E1000)- Crank Time Exceeded

378

Code Caused By: Crank time >15 seconds.

Alarm Level:

Amber warning indicator

PREVIEW - YOUFIXTHIS.COM

Download full manual at youfixthis.com

2WD 4WS Front Axle Components

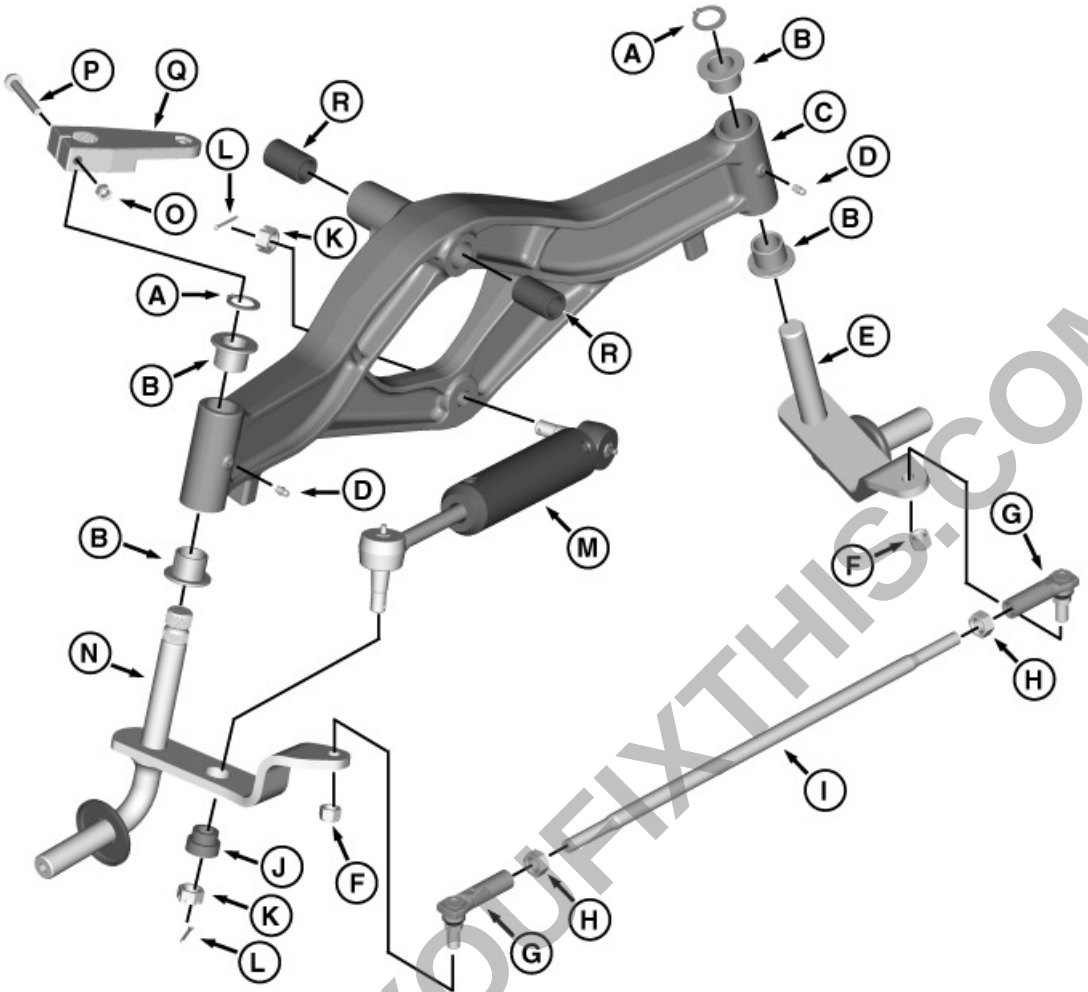

2wd 4ws Front Axle Components

LEGEND:

A	Clip
B	Bushing (4 used)
C	Front Axle
D	Lubrication Fitting
E	Front Spindle (Right)
F	Nut
G	Tie Rod End (2 used)
H	Jam Nut (2 used)
I	Tie Rod
J	Bushing
K	Nut
L	Cotter Pin
M	Steering Cylinder
N	Front Spindle (Left)
O	Nut
P	Bolt
Q	4WS Arm
R	Front Axle Pivot Bushings

PREVIEW - YOUFIXTHIS.COM

Download full manual at youfixthis.com

Steering - HFWD Schematic

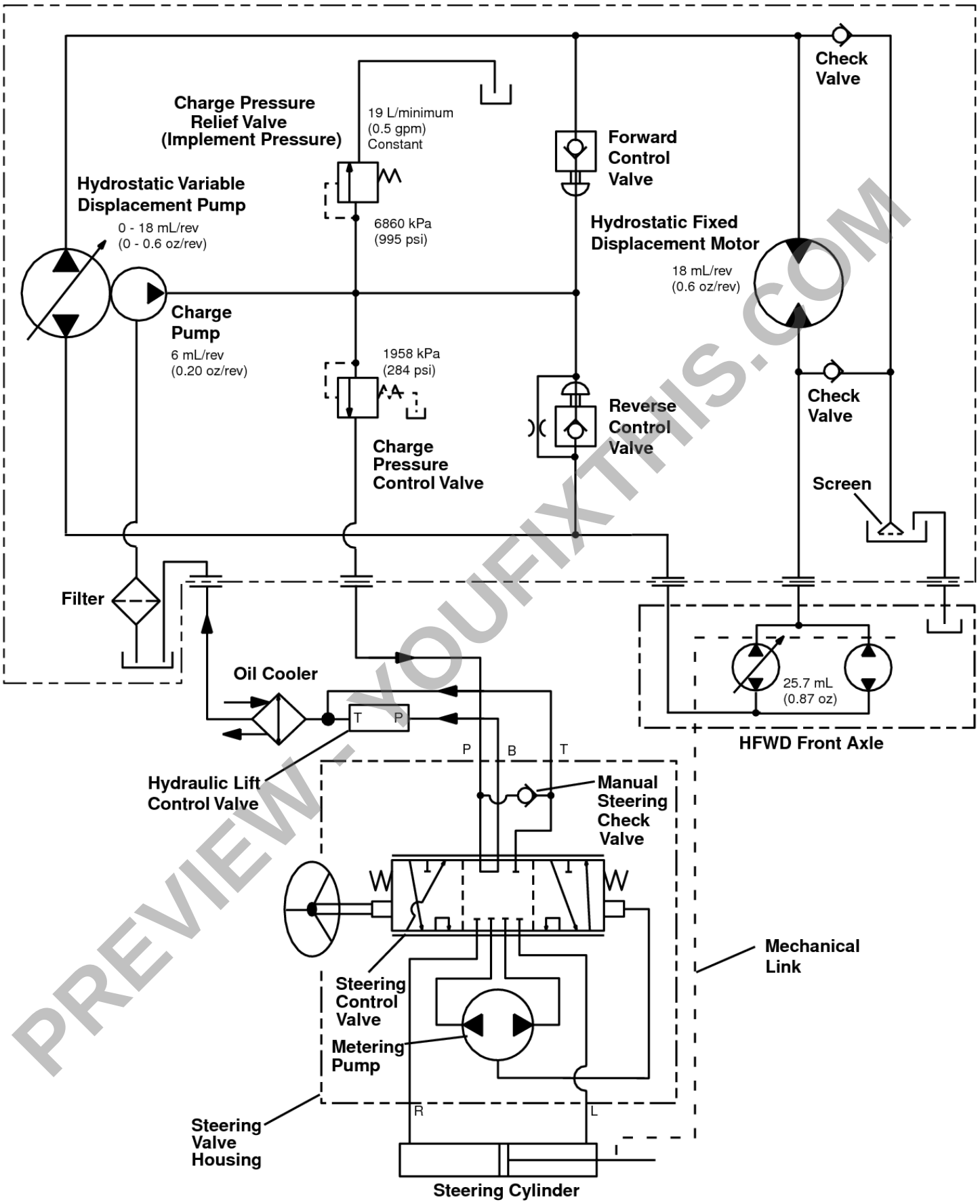

PREVIEW - YOUFIXTHIS.COM

HFWD Steering Hydraulic Schematic

Download full manual at youfixthis.com

PREVIEW ONLY

You're viewing 25 of 894 pages

The full manual includes:

- All 894 pages, complete
- Searchable PDF (find any keyword)
- No watermarks
- Instant download
- Print-ready quality

GET FULL MANUAL NOW

John Deere X710, X730, X734, X738, X739 Technical Manual

Scan or click anywhere
youfixthis.com

Click anywhere on this page to get the full manual