X750, X754, X758 Tractors (S.N. 040001-) Diagnostic and Repair

PREVIEW - YOUFIXTHIS.COM

TECHNICAL MANUAL

Tractors (SN.040001-) models X750, X754, X758

TM142419 04 MAR 16 (ENGLISH)

For complete service information also see:

Machine Connection Information	CTM441

John Deere Commercial and Consumer Equipment Lawn and Garden
Pinted by Belgreen

TM142419

Download full manual at youfixthis.com

Table of contents

FOREWORD
Section 10 - GENERAL INFORMATION
Group 05 - Safety
Group 10 - General Specifications
Group 20 - Fuel, Lubricants, and Coolants
Group 30 - Machine Specifications
Section 20 - ENGINE REPAIR
Group 10 - Engine
Group 20 - Cooling System
Group 30 - Fuel and Air System
Section 30 - ELECTRICAL REPAIR
Group 10 - Battery, Starter, and Alternator
Group 20 - Wiring Harnesses
Section 40 - POWER TRAIN REPAIR
Group 10 - Controls and Charge Pump
Group 20 - Transaxle
Group 30 - Differential
Group 40 - HFWD
Group 50 - PTO Repair
Section 50 - STEERING AND BRAKE REPAIR
Group 10 - Steering
Group 20 - Brakes
Section 60 - HYDRAULICS REPAIR
Group 10 - Hydraulics
Section 70 - ATTACHMENT REPAIR
Group 10 - Attachments
Section 80 - MISCELLANEOUS REPAIR
Group 10 - Miscellaneous
Section 90 - OPERATOR'S STATION REPAIR
Group 10 - Operator's Station
Group 20 - Component Location
Section 220 - ENGINE OPERATION, TESTS, AND ADJUSTMENTS
Group 10 - Component Location
Group 20 - Theory of Operation
Group 30 - Diagnosis
Group 40 - Tests and Adjustments
Section 230 - ELECTRICAL SYSTEM OPERATION, TESTS, AND ADJUSTMENTS
Group 10 - Component Location
Group 20 - Theory of Operation
Group 25 - Theory of Operation, EEC
Group 30 - Schematics
Group 40 - Diagnosis
Group 50 - Tests and Adjustments
Group 60 - Connectors
Group 70 - Electronic Control Units
Group 80 - Diagnose DTCs, ICC
Section 240 - POWER TRAIN OPERATION, TESTS, AND ADJUSTMENTS
Group 10 - Component Location
Group 20 - Theory of Operation
Group 30 - Diagnosis
Group 40 - Tests and Adjustments
Section 250 - STEERING AND BRAKE OPERATION, TESTS, AND ADJUSTMENTS

PREVIEW - YOUFIXTHIS.COM

Download full manual at youfixthis.com

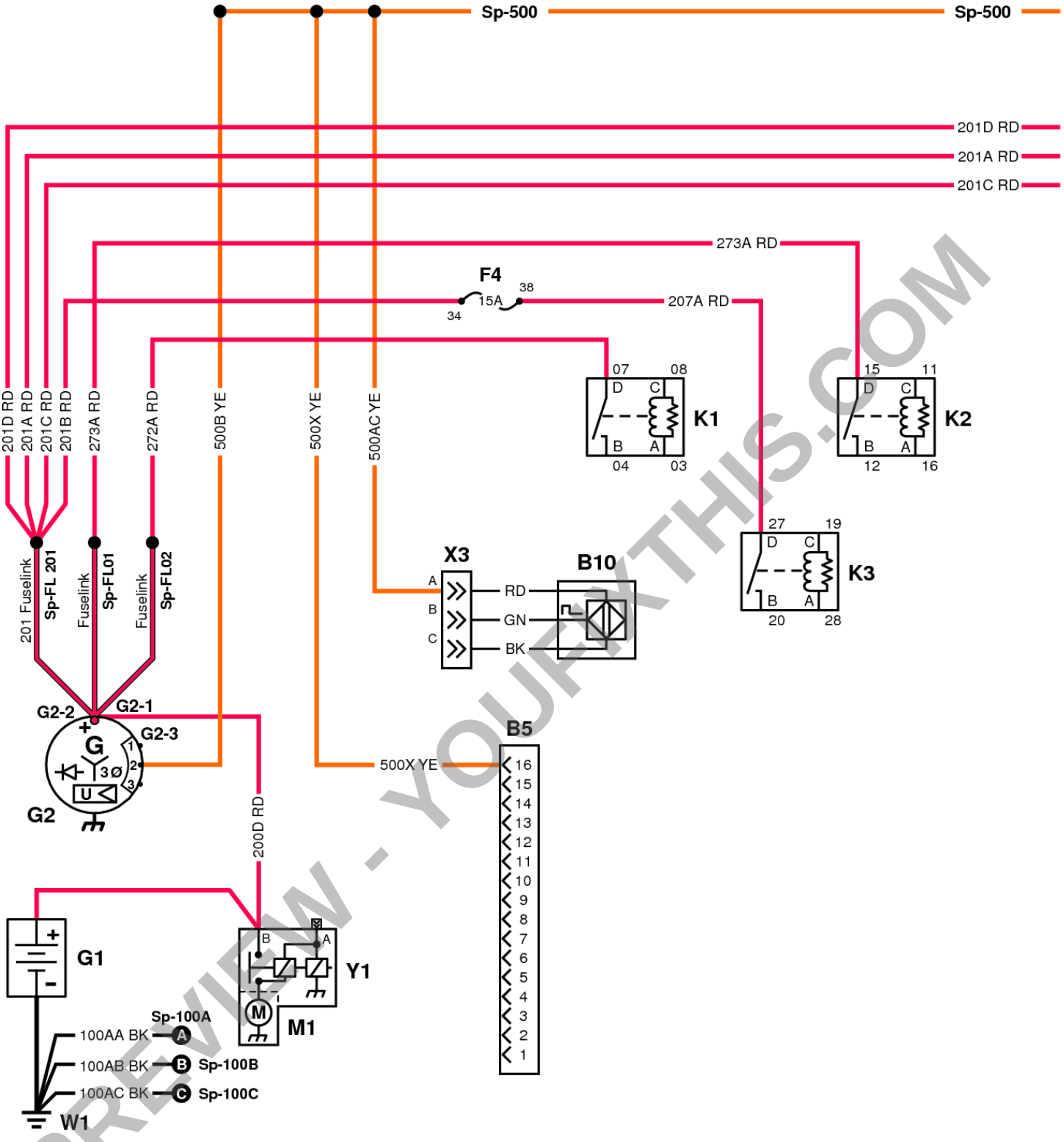

PREVIEW - YOURFIXTHIS.COM

Power Circuit Schematic (1 of 3)

LEGEND:

B5	Diagnostic Connector
B10	Front Implement Monitor (FIM)
G1	Battery
G2	Alternator
K1	Glow Plug Relay
K2	Fuel Pull-in Relay
K3	Start Relay
M1	Start Motor
X3	Front Implement Monitor Connector

Download full manual at yufixthis.com

Power Train - 2WD Hydraulic Schematic

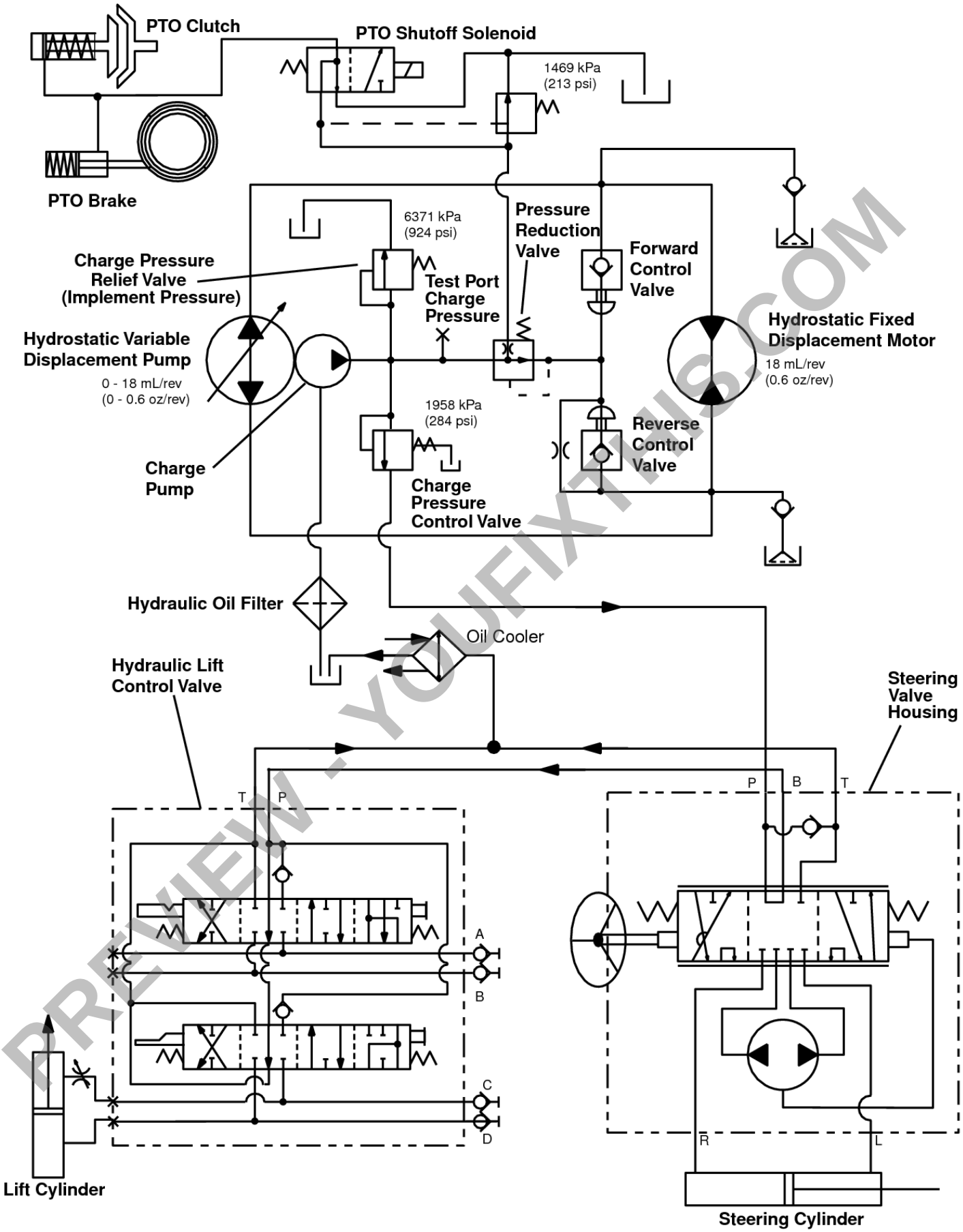

2WD Power Train Hydraulic Schematic

PREVIEW - YOUFIXTHIS.COM

Download full manual at youfixthis.com

Remove and Install Valve Cover

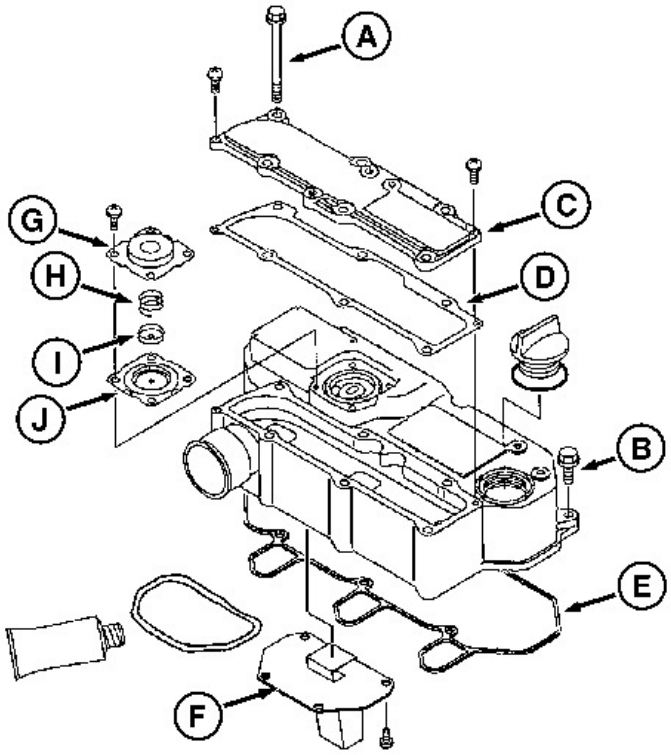

LEGEND:

A	Cap Screw, Long (6 used)
B	Cap Screw, Short (3 used)
C	Intake Cover
D	Gasket
E	Gasket
F	Breather Baffle
G	Diaphragm Cover
H	Spring
I	Center Plate
J	Diaphragm

Valve Cover Components Exploded

[1] - Remove muffler. (See Remove and Install Muffler .)

[2] - Loosen hose clamps from air cleaner hose and remove air cleaner.

[3] - Remove cap screws (A and B).

[4] - Remove valve cover.

[5] - Remove intake cover (C) and clean off mating surfaces and replace gasket (D).

[6] - Remove and disassemble breather baffle (F) and clean or replace mesh media.

[7] - Remove diaphragm cover (G), spring (H), center plate (I), and diaphragm (J).

[8] - Inspect diaphragm, spring, and center plate for wear or damage. Diaphragm must not have any cracks or tears and must not leak. Replace parts showing any wear.

a. Clean all parts.
b. Reassemble valve cover using new gaskets.
c. Use John Deere Form in Place Gasket between breather baffle and valve cover.

Number	Name	Use
◦ PM38609 (us) ◦ PM37469 (canadian) ◦ 59630 Loctite ™ (loctite)	Form-in-Place Gasket	Apply between breather baffle and valve cover.

d. Tighten valve cover cap screws to specification.

Item	Measurement	Specification
Valve Cover-to-Cylinder Head Cap Screws	Torque	11 N·m (97 lb.-in.)

PREVIEW - YOUFIXTHIS.COM

Download full manual at youfixthis.com

Straight Fitting or Special Nut Torque Chart

STRAIGHT FITTING OR SPECIAL NUT TORQUE CHART		
Thread Size	**N˙m**	**lb-ft**
3/8-24 UNF	8	6
7/16-20 UNF	12	9
1/2-20 UNF	16	12
9/16-18 UNF	24	18
3/4-16 UNF	46	34
7/8-14 UNF	62	46
1-1/16-12 UN	102	75
1-3/16-12 UN	122	90
1-5/16-12 UN	142	105
1-5/8-12 UN	190	140
1-7/8-12 UN	217	160

→NOTE:

Torque tolerance is ± 10%.

PREVIEW - YOUFIXTHIS.COM

Download full manual at youfixthis.com

Group 80 - Diagnose DTCs, ICC

Readings Overview

→NOTE:

Some signals do not apply to all applications. However, circuits, DTCs, and readings may be present.

The readings, displayed in Service ADVISOR ™ , are shown live - for example: voltages, temperatures, and positions, These are shown for reference, diagnostics, adjustment, or calibration purposes.

It is recommended that Service ADVISOR ™ is used to take readings as multiple components can be checked simultaneously. The display panel can display few readings.

PREVIEW - YOUFIXTHIS.COM

Download full manual at youfixthis.com

ICC Pinout

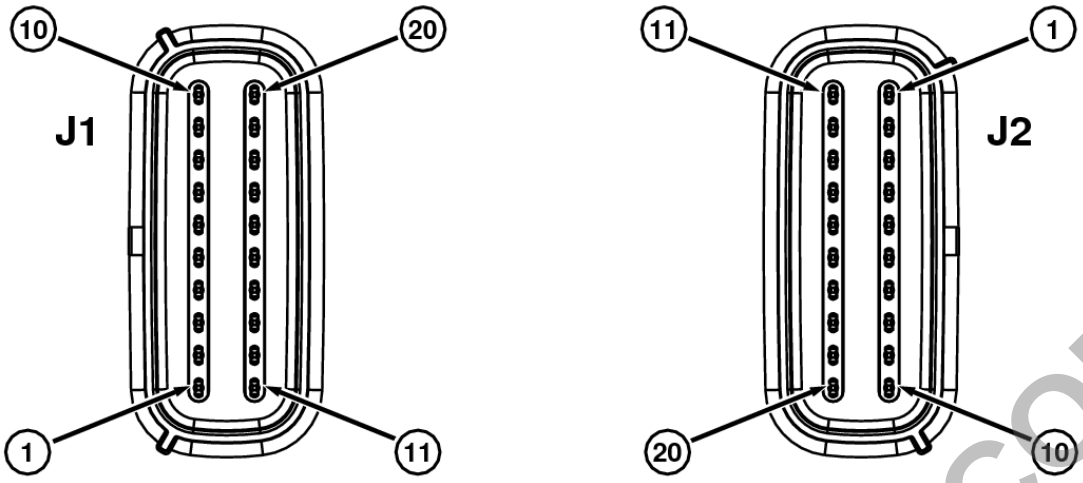

Instrument Cluster Controller (ICC)

PREVIEW - YOUFIXTHIS.COM

Download full manual at youfixthis.com

Engine Components

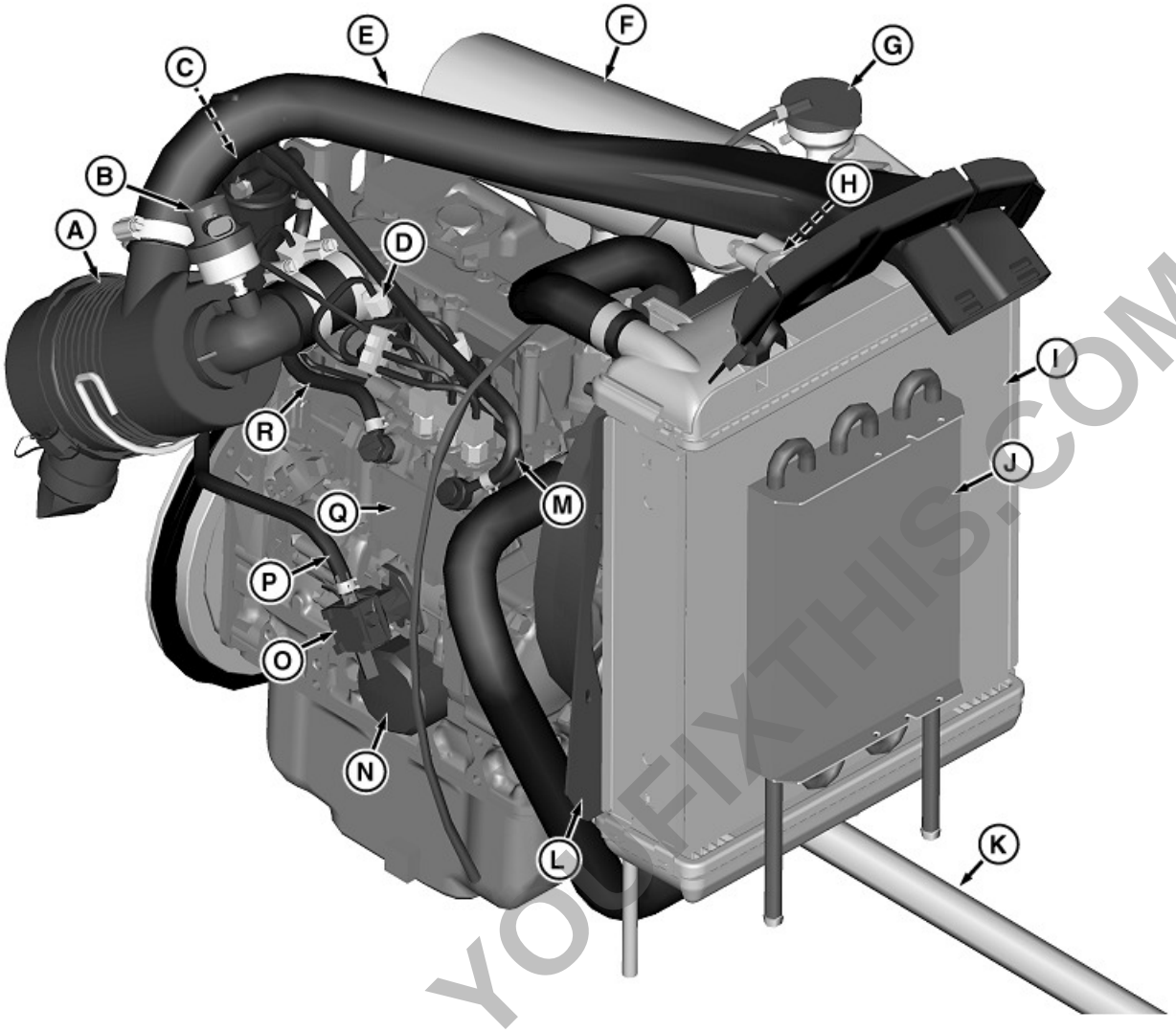

Engine Components

LEGEND:

A	Air Cleaner Assembly
B	Air Restriction Indicator
C	Fuel Filter
D	Fuel Injector
E	Air Intake Tube
F	Muffler
G	Coolant Reservoir
H	Radiator Cap
I	Radiator
J	Hydraulic Oil Cooler
K	Drive Shaft to Transaxle
L	Fan Shroud
M	Return Fuel Line
N	Oil Filter
O	Fuel Transfer Pump
P	Fuel Line (Fuel pump out to filter)
Q	Fuel Injector Pump
R	Fuel Line (Filter to injector pump)

PREVIEW - YOUFIXTHIS.COM

Download full manual at youfixthis.com

Group 30 - Diagnosis

Diagnose Engine Will Not Start

66

Engine Will Not Start

Diagnose Engine Will Not Start

(1) Test Procedure

Action:

Starting procedure being used is correct for conditions?

Result:

YES: Go to next step.

NO: Use correct procedure for conditions. See the Operator's Manual.

(2) (Continued)

Action:

Battery 12.7 VDC or higher?

Result:

YES: Go to next step.

NO: Charge and check battery.

(3) (Continued)

Action:

No open circuits in wiring?

Result:

YES: Go to next step.

NO: Repair or replace as needed.

(4) (Continued)

Action:

Starting motor functioning properly?

Result:

YES: Go to next step.

NO: Repair or replace starting motor.

(5) (Continued)

Action:

Correct type of fuel being used?

Result:

YES: Go to next step.

NO: Drain and replace fuel.

(6) (Continued)

PREVIEW - YOUFIXTHIS.COM

Download full manual at youfixthis.com

Specifications

Item	Measurement	Specification
Valve Cover-to-Cylinder Head Cap Screws	Torque	11 N·m (97 lb.-in.)
Rocker Arm Assembly-to-Head Cap Screws	Torque	26 N·m (226 lb.-in.)
Rocker Arm Shaft Diameter		
Standard	Diameter	11.97—11.98 mm (0.471—0.472 in.)
Wear Limit	Diameter	11.95 mm (0.470 in.)
Rocker Arm and Shaft Support ID		
Standard	Diameter	12.00—12.02 mm (0.472—0.473 in.)
Wear Limit	Diameter	12.09 mm (0.476 in.)
Wear Limit	Diameter	0.13 mm (0.005 in.)
Push Rod	Clearance	0—0.03 mm (0.0—0.001 in.)
Muffler Mounting Nuts	Torque	28 N·m (248 lb.-in.)
Exhaust Manifold-to-Cylinder Head Cap Screws	Torque	22.5—28.4 N·m (17—21 lb.-ft.)
Initial	Torque	27 N·m (20 lb.-ft.)
Final	Torque	54—58 N·m (40—43 lb.-ft.)
Cylinder Head Distortion		
Standard	Clearance	0—0.05 mm (0—0.002 in.)
Wear Limit	Clearance	0.15 mm (0.006 in.)
Valve Grinding		
Face Margin (A)	Intake and Exhaust Standard	0.4—0.6 mm (0.015—0.023 in.)
	Wear Limit	0.4 mm (0.015 in.)
Face Angle (B)	Intake Valve	30°
	Exhaust Valve	45°
Valve Stem Diameter		
Intake Valve	Standard Diameter	5.96—5.98 mm (0.234—0.2355 in.)
Exhaust Valve	Standard Diameter	5.95—5.97 mm (0.234—0.235 in.)
Both Valves	Wear Limit	5.90 mm (0.232 in.)
Valve Recession		
Both Valves	Standard	0.40—0.60 mm (0.016—0.024 in.)
Intake Valve	Wear Limit	0.09 mm (0.04 in.)

PREVIEW - YOUFIXTHIS.COM

Download full manual at youfixthis.com

Adjust HFWD Wheel Speed

Reason:

To adjust the eccentric cam to set front wheel rotation speed relative to rear wheel rotation speed.

Required Tools:

Two people are needed to perform the wheel speed adjustment.

Photo Tachometer

JT05719

Used to measure front and rear wheel rotation speeds.

Procedure:

[1] -

CAUTION:

Avoid Injury! Do not defeat machine safety systems.

Place machine on support stands so all four wheels are off of the ground.

[2] - Check that all four wheels can rotate without coming into contact with the ground or any objects.

[3] - Verify that the engine can be run and the forward and reverse pedals can be pressed.

[4] - Chock or secure the front left wheel so it can not rotate during test procedure.

[5] - With one person on the operator's seat and another ready to measure wheel speeds, start the engine and set it to high idle.

[6] - Press the differential traction assist control down and the forward pedal fully down. Measure rear wheel rotation speed. Adjust engine rpm to obtain specified wheel rpm when pedal is fully pressed down.

Item	Measurement	Specification
Wheel	Rotation Speed	100—125 rpm

[7] - Measure front right wheel rpm. Check that front wheel rpm meets specification in the wheel speed table.

[8] -

CAUTION:

Avoid Injury! Exhaust system will be hot.

If it is necessary to adjust the front wheel speed to meet specification:

a. Stop the engine.

PREVIEW - YOUFIXTHIS.COM

Download full manual at youfixthis.com

Specifications

Item	Measurement	Specification
All Timing Gears		
Standard	Backlash	0.06—0.12 mm (0.002—0.005 in.)
Wear Limit	Backlash	0.14 mm (0.0055 in.)
Fuel		
Fuel Flow in 15 seconds (minimum)	Flow Rate	100 mL (3.4 oz.)
Fuel Pressure (maximum)	Pressure	37.3 kPa (5.4 psi)
Injection Nozzle Specification		
Nozzle Opening Pressure	Pressure	12 300—13 300 kPa (1785—1930 psi)
Nozzle Pressure for Leak Test	Pressure	11 032 kPa (1600 psi)
Injection Nozzle Test Results		
Slow Hand Lever Movement	Quantity	Chatter Sound
Slow Hand Lever Movement	Quantity	Fine Stream Spray Pattern
Fast Hand Lever Movement	Quantity	Fine Atomized Spray
Oil Pressure at:		
Fast Idle	Pressure	282—380 kPa (41—55 psi)
Slow Idle (minimum)	Pressure	60 kPa (9 psi)
Thermostat		
Begin Thermostat Opening	Temperature	69.65—72.5 ° C (157—163 ° F)
Thermostat Fully Open	Temperature	85 ° C (185 ° F)
Relief Valve Opening Pressure	Pressure	83—93 kPa (12—14 psi)
Camshaft	End Play	0.05—0.25 mm (0.002—0.010 in.)
Cylinder Compression @ 250 rpm Cranking Speed	Pressure	3240 kPa (470 psi)
Cylinder Compression (Minimum)	Pressure	2551 kPa (370 psi)
Difference Between Cylinders (Maximum)	Pressure	200 to 296 kPa (29 to 43 psi)
Drive Gear Cap Screws	Torque	32—36 N·m (24—27 lb.-ft.)
Fast Idle Speed	Rotation	3415 ±50 rpm
Gear Cover Cap Screws	Torque	23—29 N·m (17—22 lb.-ft.)
Injection Timing	Angle	19° ±1°
Pressurize System	Pressure	100 kPa (15 psi)
Rocker Cover Bolt	Torque	11 N·m (97 lb.-in.)
Valve Clearance	Clearance	0.15—0.25 mm (0.006—0.010 in.)

PREVIEW - YOUFIXTHIS.COM

Download full manual at youfixthis.com

Item	Measurement	Specification
		(0.828 in.)
Cam Follower-to-Bore Oil Clearance		
Standard	Clearance	0.04—0.09 mm
		(0.002—0.004 in.)
Wear Limit	Clearance	0.13 mm
		(0.005 in.)
Camshaft-to-Engine cap Screws	Torque	11 N·m
		(97 lb.-in.)
Thrust Plate-to-Front Side of Camshaft Bearing Journal	Standard Side Gap	0.05—0.15 mm
		(0.002—0.006 in.)
Camshaft	Standard Axial Runout (Wobble)	0.00—0.02 mm
		(0.00—0.001 in.)
	Wear Limit Axial Runout (Wobble)	0.05 mm
		(0.002 in.)
Camshaft Lobe	Standard Height	34.53—34.66 mm
		(1.359—1.364 in.)
	Wear Limit Height	34.28 mm
		(1.349 in.)
Camshaft Bearing Journal		
Gear Side and Flywheel-End Journals	Standard OD	39.94—35.96 mm
		(1.572—1.573 in.)
	Wear Limit OD	39.91 mm
		(1.571 in.)
Intermediate Journals	Standard OD	39.91—39.94 mm
		(1.571—1.572 in.)
	Wear Limit OD	39.88 mm
		(1.569 in.)
Camshaft Bore	Standard ID	40.0—40.03 mm
		(1.575—1.578 in.)
	Wear Limit ID	40.10 mm
		(1.579 in.)
	Oil Clearance	0.04—0.14 mm
		(0.002—0.005 in.)
Camshaft Bearing Bores		
Flywheel-End Bore	Standard ID	40.0—40.03 mm
		(1.575—1.576 in.)
	Wear Limit ID	40.1 mm
		(1.579 in.)
	Oil Clearance	0.04—0.09 mm
		(0.002—0.003 in.)
Intermediate Bores	Standard ID	40.0—40.03 mm
		(1.575—1.576 in.)
	Wear Limit ID	40.1 mm
		(1.579 in.)
	Oil Clearance	(0.07—0.12 mm)
		(0.003—0.005 in.)
Oil Pan-to-Engine Cap Screws	Torque	10 N·m
		(88 lb.-in.)
Connecting Rod	Side Play	0.2—0.4 mm
		(0.008—0.016 in.)
Crankshaft	End Play	0.11—0.25 mm
		(0.004—0.010 in.)

PREVIEW - YOUFIXTHIS.COM

Download full manual at youfixthis.com

Section 10 - GENERAL INFORMATION

Table of contents

Group 05 - Safety 1
- Recognize Safety Information 1
- Understand Signal Words 1
- Handle Fuel Safely—Avoid Fires 1
- Prevent Battery Explosions 2
- Prepare for Emergencies 2
- Prevent Acid Burns 4
- Handle Chemical Products Safely 4
- Avoid High-Pressure Fluids 5
- Park Machine Safely 5
- Support Machine Properly 6
- Wear Protective Clothing 7
- Work in Clean Area 7
- Service Machines Safely 8
- Work In Ventilated Area 8
- Illuminate Work Area Safely 8
- Replace Safety Signs 9
- Use Proper Lifting Equipment 9
- Remove Paint Before Welding or Heating 9
- Avoid Heating Near Pressurized Fluid Lines 11
- Follow Tire Recommendations 11
- Avoid Harmful Asbestos Dust 12
- Practice Safe Maintenance 13
- Use Proper Tools 13
- Decommissioning — Proper Recycling and Disposal of Fluids and Components 14
- Service Cooling System Safely 15
- Stay Clear of Rotating Drivelines 16
- Construct Dealer-Made Tools Safely 17
- Live With Safety 17

Group 10 - General Specifications 18
- Service Recommendations for O-Ring Boss Fittings 18
- Service Recommendations For Flat Face O-Ring Seal Fittings 20
- Metric Cap Screw Torque Values—Grade 7 21
- Metric Bolt and Screw Torque Values 22
- Unified Inch Bolt and Screw Torque Values 23

Group 20 - Fuel, Lubricants, and Coolants 24
- Diesel Fuel 24
- Handling and Storing Diesel Fuel 24
- Do Not Use Galvanized Containers 25
- Lubricity of Diesel Fuel 25
- Testing Diesel Fuel 25
- BioDiesel Fuel 27
- Filling Fuel Tank 28
- Diesel Engine Break-In Oil 29
- Diesel Engine Oil — Non-Emissions Certified and Certified Tier 1 and Stage I 30
- Oil Filters 31
- Operating in Warm Temperature Climates 31
- Diesel Engine Coolant (engine without wet sleeve cylinder liners) 32
- John Deere COOL-GARD™ II Coolant Extender 33
- Additional Information About Diesel Engine Coolants and John Deere LIQUID COOLANT CONDITIONER

PREVIEW - YOUFIXTHIS.COM

Download full manual at youfixthis.com

Group 20 - Theory of Operation

Summary of References

- Air Intake System Theory of Operation
- Fuel System Theory of Operation
- Cooling System Theory of Operation
- Lubrication System Theory of Operation

Air Intake System Theory of Operation

The air intake system filters air needed for combustion. The system components include:

- Air inlet tube
- Air cleaner housing and cover
- Unloader valve (and rubber cleanout valve)
- Primary air filter element
- Secondary (or safety) air cleaner element
- Air filter restriction indicator
- outlet tube

Air enters the air cleaner inlet tube and into the air cleaner housing, and is directed into the side of a shield. This starts a high-speed centrifugal motion of air which continues around the element until it reaches the far end of the air cleaner housing, to an unloader valve.

Most of the dust is separated from the air by centrifugal force that causes heavy dust particles to enter the opening at the top of the unloader valve. The air flows through the primary air filter element. The primary filter element filters the larger dirt particles before the air enters the secondary air filter element. The finer dirt particles are filtered out by the secondary air filter before the air enters the intake manifold.

The dirt that is deposited in the unloader valve is removed through the rubber diaphragm at the base of the air cleaner. When the engine is running, a pulsing action is created in the intake system by each intake stroke of the engine. This pulsing action causes the rubber diaphragm to open and close, thus emptying the unloader valve. The operator can squeeze the valve to let out the large particles.

The difference in pressure between the intake manifold and air cleaner is monitored by the Air Filter Restriction Indicator. As the air filters become clogged, and intake manifold vacuum increases, the restriction indicator piston is pulled down against spring tension, and is shows when it’s time to change air cleaner.

PREVIEW - YOUFIXTHIS.COM

Download full manual at youfixthis.com

PREVIEW - YOUFIXTHIS.COM

Download full manual at youfixthis.com

Inspect Cylinder Bore

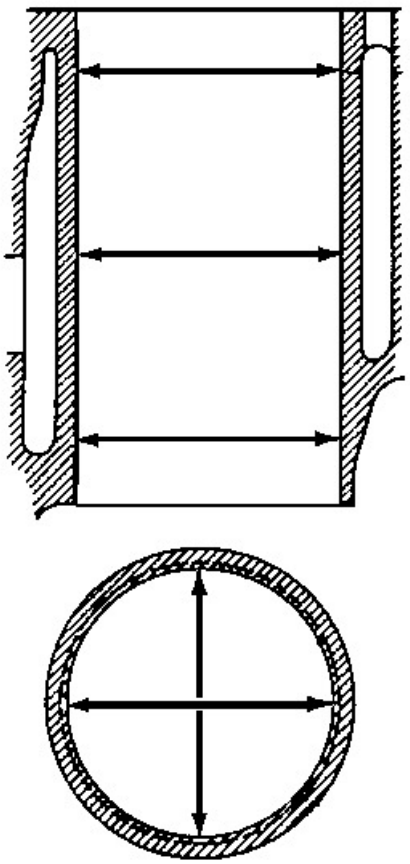

Cylinder Bore Measurement

Inspection

Measure cylinder bore diameter at three positions; top, middle, and bottom. At these three positions, measure in both directions; along crankshaft center line and direction of crankshaft rotation.

Item	Measurement	Specification
Cylinder Bore Specifications		
3TNM72 Standard	ID	72.00—72.03 mm (2.834 in.)
3TNM72 Standard Wear Limit	ID	72.20 mm (2.842 in.)
3TNM72 Oversize	ID	72.25—72.28 mm (2.844—2.846 in.)
3TNM72 Oversize Wear Limit	ID	72.45 mm (2.852 in.)
3TNM72 Piston to Cylinder	Clearance	0.01—0.07 mm (0.0004—0.0028 in.)
3TNM74 Standard	ID	74.01—74.02 mm (2.9138 in.)
3TNM74 Standard Wear Limit	ID	74.20 mm (2.9213 in.)
3TNM74 Oversize	ID	74.25—74.28 mm (2.923—2.924 in.)
3TNM74 Oversize Wear Limit	ID	74.45 mm (2.931 in.)
3TNM74 Piston to Cylinder	Clearance	0.031—0.051 mm (0.0012—0.002 in.)
All Models Cylinder Roundness and Taper		

PREVIEW - YOUFIXTHIS.COM

Download full manual at youfixthis.com

Item	Measurement	Specification
		(29 lb.-ft.)
Transaxle Steering Arm Bolt	Torque	66 N·m
		(48 lb.-ft.)

PREVIEW - YOUFIXTHIS.COM

Download full manual at youfixthis.com

Remove and Install Steering Valve

Removing:

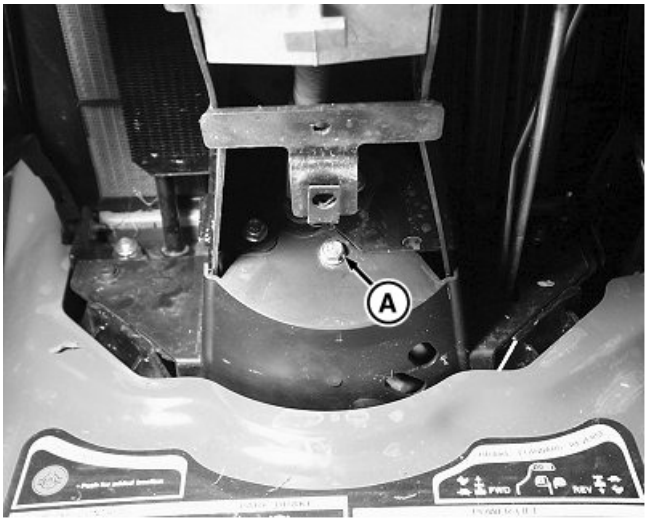

LEGEND:
A Screw

Steering Valve Cover Bolt

[1] - Remove the instrument panel and shroud to access steering assembly. (See Instrument Panel Remove and Install .)

[2] - Remove cap screw (A) securing steering valve cover.

[3] -

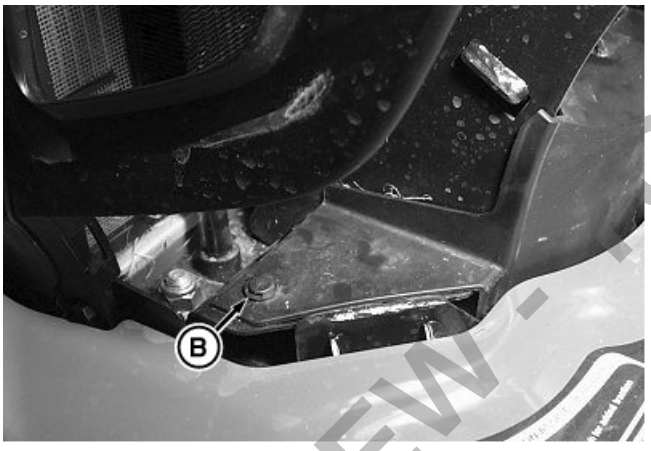

LEGEND:
B Fastener

Cover Fasteners

Remove fasteners (B) on both sides of cover.

[4] -

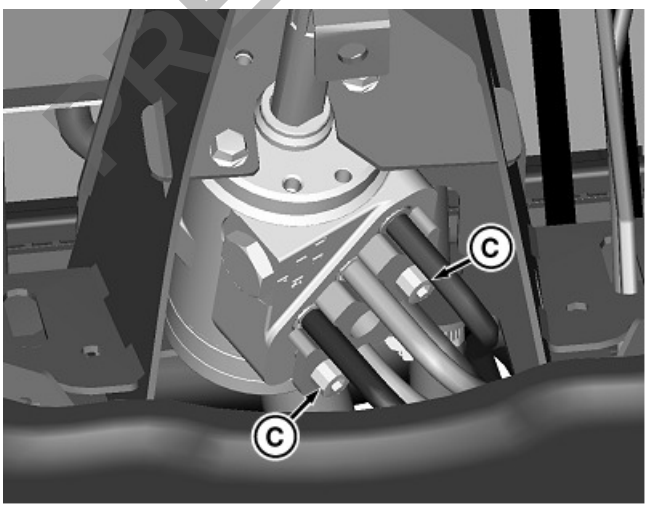

LEGEND:
C Socket Head Cap Screws

Hydraulic Line Retainer Plate

PREVIEW - YOUFIXTHIS.COM

Download full manual at youfixthis.com

Remove and Install Foot Deck

Remove Foot Deck

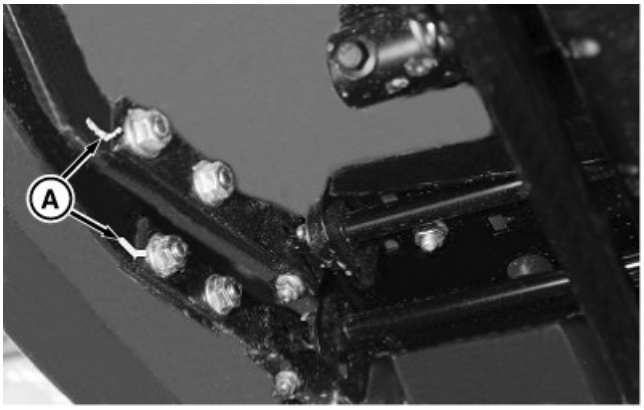

LEGEND:

A	Alignment Mark

Mark hydro control pedals

[1] - Park machine safely. See “Parking Safely” in Safety Section.

[2] - Remove fender deck. (See Remove and Install Fender Deck .)

[3] - Place alignment marks (A) on hydrostatic control pedals and control arms.

[4] -

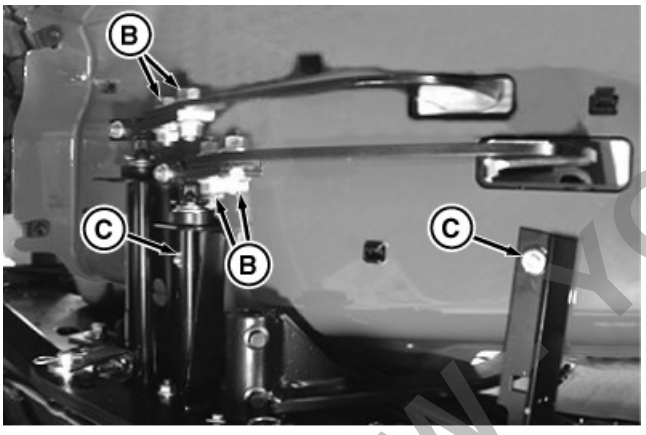

LEGEND:

B	Cap Screw
C	Hex Nut

Remove bolts securing hydro pedals

Remove two hex nuts and cap screws (B) securing hydrostatic control pedals to control arms. Remove pedals from foot deck.

[5] - Remove two hex nuts (C) securing right side foot rest to support brackets.

[6] -

PREVIEW YOUFIXTHIS.COM

Download full manual at youfixthis.com

Procedure 212
Procedure 215
Procedure 217
Procedure 217
Procedure 218
Procedure 218

PREVIEW - YOUFIXTHIS.COM

Download full manual at youfixthis.com

Relay Test

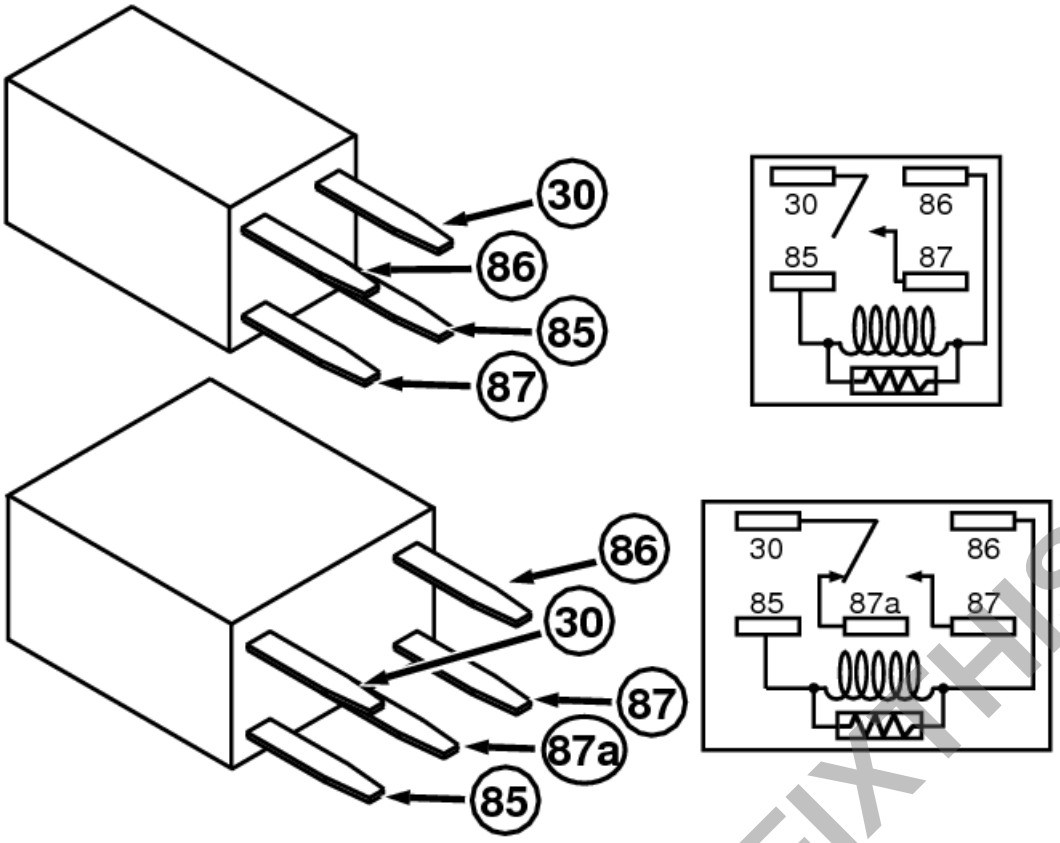

Relays

[1] - Remove relay from fuse block.

[2] - Check resistance between relay coil terminals 85 and 86.

[3] - Check continuity between other terminals combinations.

[4] - Connect a jumper wire between battery positive (+) post and relay terminal 85. Connect a jumper wire from relay terminal 86 to ground (–). Check for continuity between terminals 30 and 87.

Results:

SJ15808 Relay Continuity

4-Pin Relay	Terminal
Off	85—86 110 Ω ±15%
Energized	Continuity 30—87

M169838 Relay Continuity

5-Pin Relay	Terminal
Off	85—86 100 Ω ±15% Continuity 30—87a
Energized	Continuity 30—87

- If continuity is not correct, replace the relay.

  →NOTE: Resistance varies among relay manufacturers. The resistance should not be less than 70 ohms, or more than 150 ohms.

  If resistance between terminals 85 and 86 does not meet specification, replace relay.

PREVIEW - YOUFIXTHIS.COM

Download full manual at youfixthis.com

NO: End of tests.

PREVIEW - YOUFIXTHIS.COM

Download full manual at youfixthis.com

Diagnose Park Brake Will Not Release

62

Park Brake Will Not Release

(1) Test Procedure

Action:

Is brake pedal or linkage bent, binding or worn?

Result:

YES: Replace or repair as necessary.

NO: Go to next step.

(2) Continued

Action:

Is brake return spring broken or stretched?

Result:

YES: Replace or repair as necessary.

NO: Go to next step.

(3) Continued

Action:

Is brake linkage freeplay adjustment incorrect? (See Brake and Differential Linkage Adjustment .)

Result:

YES: Adjust to specification.

NO: Go to next step.

(4) Continued

Action:

Is park brake rod and pawl bent or binding?

Result:

YES: Replace or repair as necessary.

NO: Go to next step.

(5) Continued

Action:

Is brake arm and cam bent, binding, or worn?

Result:

YES: Replace or repair as necessary.

NO: Go to next step.

(6) Continued

Action:

Is the differential lock arm bent, binding, or worn?

PREVIEW - YOUFIXTHIS.COM

Download full manual at youfixthis.com

PREVIEW ONLY

You're viewing 25 of 970 pages

The full manual includes:

- All 970 pages, complete
- Searchable PDF (find any keyword)
- No watermarks
- Instant download
- Print-ready quality

GET FULL MANUAL NOW

John Deere X750, X754, X758 Technical Manual

Scan or click anywhere
youfixthis.com

Click anywhere on this page to get the full manual