JOHN DEERE
WORLDWIDE COMMERCIAL & CONSUMER EQUIPMENT DIVISION

XUV Gator Utility Vehicle
825i

TM107119 JULY 2010

TECHNICAL MANUAL



JOHN DEERE

North American Version
Litho In U.s.a.

PREVIEW - YOUFIXTHIS.COM

Download full manual at youfixthis.com

INTRODUCTION

Manual Description

This technical manual is written for an experienced technician and contains sections that are specifically for this product. It is a part of a total product support program.

The manual is organized so that all the information on a particular system is kept together. The order of grouping is as follows:

- Table of Contents
- Specifications and Information
- Identification Numbers
- Tools and Materials
- Component Location
- Schematics and Harnesses
- Theory of Operation
- Operation and Diagnostics
- Diagnostics
- Tests and Adjustments
- Repair
- Other

Note: Depending on the particular section or system being covered, not all of the above groups may be used.

The bleed tabs for the pages of each section will align with the sections listed on this page. Page numbering is consecutive from the beginning of the Safety section through the last section.

We appreciate your input on this manual. If you find any errors or want to comment on the layout of the manual please contact us.

Safety

Specifications and Information

Engine

Electrical

Power Train

Steering

Brakes

Miscellaneous

All information, illustrations and specifications in this manual are based on the latest information at the time of publication. The right is reserved to make changes at any time without notice.

COPYRIGHT© 2010
Deere & Co.
John Deere Worldwide Commercial and Consumer Equipment Division
All rights reserved
Previous Editions
COPYRIGHT©

PREVIEW - YOUFIXTHIS.COM

Download full manual at youfixthis.com

Safety

Recognize Safety Information

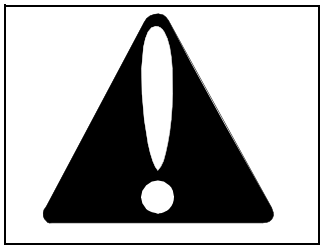

MIF

This is the safety-alert symbol. When you see this symbol on your machine or in this manual, be alert to the potential for personal injury.

Follow recommended precautions and safe servicing practices.

Understand Signal Words

A signal word - DANGER, WARNING, or CAUTION - is used with the safety-alert symbol. DANGER identifies the most serious hazards.

DANGER or WARNING safety signs are located near specific hazards. General precautions are listed on CAUTION safety signs. CAUTION also calls attention to safety messages in this manual.

Replace Safety Signs



MIF

Replace missing or damaged safety signs. See the machine operator's manual for correct safety sign placement.

Handle Fluids Safely - Avoid Fires

Be Prepared For Emergencies

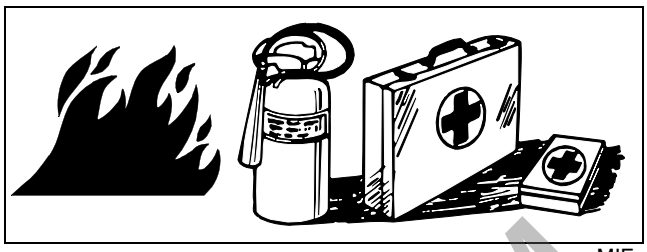

MIF

- When you work around fuel, do not smoke or work near heaters or other fire hazards.
- Store flammable fluids away from fire hazards. Do not incinerate or puncture pressurized containers.
- Make sure machine is clean of trash, grease, and debris.
- Do not store oily rags; they can ignite and burn spontaneously.
- Be prepared if a fire starts.
- Keep a first aid kit and fire extinguisher handy.
- Keep emergency numbers for doctors, ambulance service, hospital, and fire department near your telephone.

Use Care In Handling And Servicing Batteries

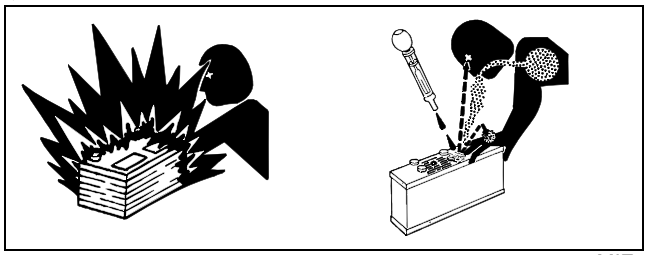

MIF

Prevent Battery Explosions

- Keep sparks, lighted matches, and open flame away from the top of battery. Battery gas can explode.
- Never check battery charge by placing a metal object across the posts. Use a volt-meter or hydrometer.
- Do not charge a frozen battery; it may explode. Warm battery to 16°C (60°F).

Prevent Acid Burns

- Sulfuric acid in battery electrolyte is poisonous. It is strong enough to burn skin, eat holes in clothing, and cause blindness if splashed into eyes.

Avoid acid burns by:

1. Filling batteries in a well-ventilated area.
2. Wearing eye protection and rubber gloves.

PREVIEW - YOUFIXTHIS.COM
Download full manual at youfixthis.com

Specifications

General Specifications

Specifications:

Make	Chery
Model	SQR372 FI
Type	4-cycle gas/Liquid Cooled
Cylinders	3
Bore	72 mm (2.835 in.)
Stroke	66.5 mm (2.618 in.)
Displacement	812 cm^3 (49.5 cu-in.)
Spark Plug	NGK BKR6 EGP
Spark Plug Gap	0.9 - 1.05 mm (0.035 - 0.041 in.)
Crankcase (approximate with filter)	2.2 L (2.3 qt)
Engine Oil (see temperature chart in spec section, 5W - 30 Preferred)	John Deere PLUS-4 or John Deere TURF-GARD
Cooling system (Including recovery tank)	5.0 L (5.2 qt)

Test and Adjustment Specifications

Engine:

Low Speed Idle	950 ± 50 rpm
Rev Limiter Speed	6150 rpm
Oil pressure	206 - 482 kPa (30 - 70psi)
Maximum compression pressure variation between cylinders	138 kPa (20 psi)
Intake valve clearance (cold)	0.18 ± 0.05 mm (0.007 ± 0.002 in.)
Exhaust valve clearance (cold)	0.25 ± 0.05 mm (0.010 ± 0.002 in.)

Fuel/Air System:

Fuel system pressure	315 - 345 kPa (45.6 - 50.4 psi)

Cooling System:

Radiator Cap

Maximum test pressure	117 kPa (17 psi)
Minimum pressure after 15 seconds	90 kPa (13 psi)
Nominal Opening pressure	83 - 96 kPa (12 - 14 psi)
Minimum pressure	83 kPa (12 psi)

Thermostat

Rating	85°C (185°F)

PREVIEW - YOUFIXTHIS.COM

Download full manual at youfixthis.com

Component Location **Engine Intake**

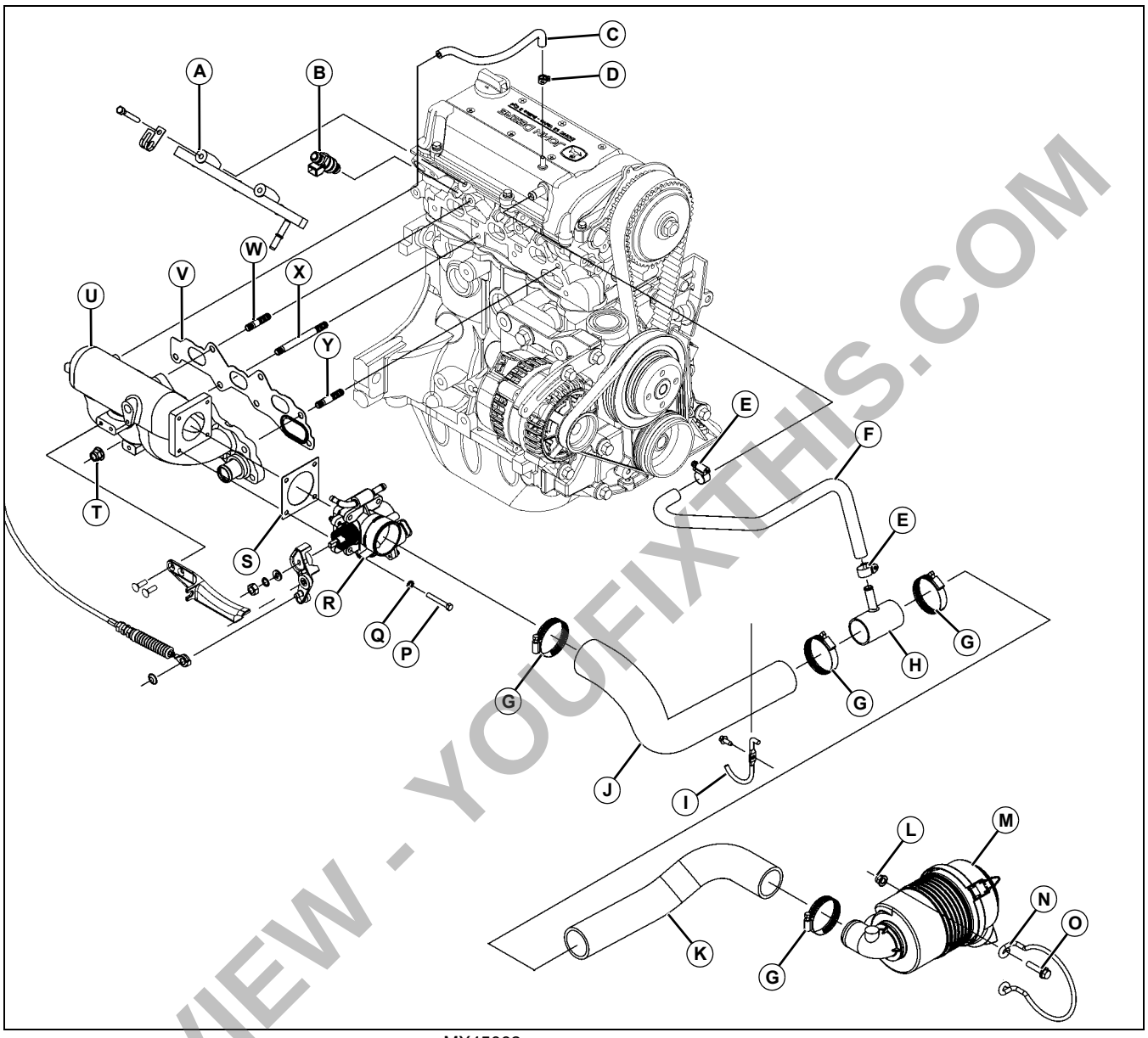

MX45062

A- Fuel Rail
B- Fuel Injector
C- Hose
D- Clamp
E- Clamp (2 used)
F- Hose
G- Clamp (4 used)
H- Adaptor
I- Bracket
J- Hose
K- Hose
L- Flange Nut (2 used)
M- Air Filter Assembly
N- Bracket
O- Bolt (2 used)
P- Screw (4 used)
Q- Washer (4 used)
R- Throttle Body Assembly
S- Gasket
T- Flange Nut (7 used)
U- Intake Manifold
V- Gasket
W- Stud (5 used)
X- Stud
Y- Stud

PREVIEW - YOUFIXTHIS.COM

Download full manual at youfixthis.com

Specifications

Metric Fastener Torque Values

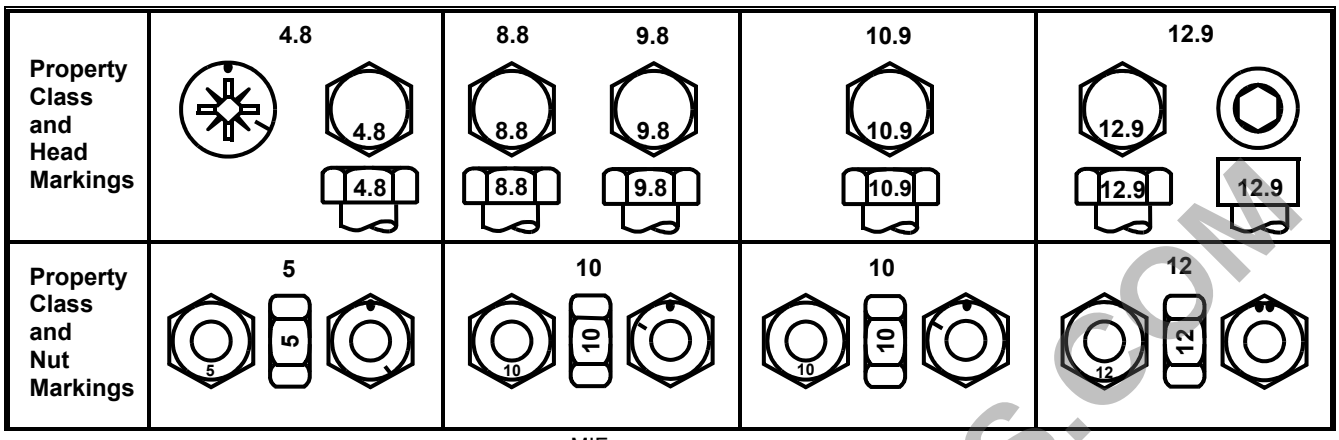

MIF

	Class 4.8				Class 8.8 or 9.8				Class 10.9				Class 12.9			
	Lubricated a		Dry a		Lubricated a		Dry a		Lubricated a		Dry a		Lubricated a		Dry a	
SIZE	N•m	lb-ft	N•m	lb-ft	N•m	lb-ft	N•m	lb-ft	N•m	lb-ft	N•m	lb-ft	N•m	lb-ft	N•m	lb-ft
M6	4.8	3.5	6	4.5	9	6.5	11	8.5	13	9.5	17	12	15	11.5	19	14.5
M8	12	8.5	15	11	22	16	28	20	32	24	40	30	37	28	47	35
M10	23	17	29	21	43	32	55	40	63	47	80	60	75	55	95	70
M12	40	29	50	37	75	55	95	70	110	80	140	105	130	95	165	120
M14	63	47	80	60	120	88	150	110	175	130	225	165	205	150	260	109
M16	100	73	125	92	190	140	240	175	275	200	350	225	320	240	400	300
M18	135	100	175	125	260	195	330	250	375	275	475	350	440	325	560	410
M20	190	140	240	180	375	275	475	350	530	400	675	500	625	460	800	580
M22	260	190	330	250	510	375	650	475	725	540	925	675	850	625	1075	800
M24	330	250	425	310	650	475	825	600	925	675	1150	850	1075	800	1350	1000
M27	490	360	625	450	950	700	1200	875	1350	1000	1700	1250	1600	1150	2000	1500
M30	675	490	850	625	1300	950	1650	1200	1850	1350	2300	1700	2150	1600	2700	2000
M33	900	675	1150	850	1750	1300	2200	1650	2500	1850	3150	2350	2900	2150	3700	2750
M36	1150	850	1450	1075	2250	1650	2850	2100	3200	2350	4050	3000	3750	2750	4750	3500

DO NOT use these hand torque values if a different torque value or tightening procedure is given for a specific application. Torque values listed are for general use only and include a ±10% variance factor. Check tightness of fasteners periodically. DO NOT use air powered wrenches.

Shear bolts are designed to fail under predetermined loads. Always replace shear bolts with identical grade.

Fasteners should be replaced with the same grade. Make sure fastener threads are clean and that you properly start thread engagement. This will prevent them from failing when tightening.

When bolt and nut combination fasteners are used, torque values should be applied to the NUT instead of the bolt head.

Tighten toothed or serrated-type lock nuts to the full torque value.

a *"Lubricated" means coated with a lubricant such as engine oil, or fasteners with phosphate and oil coatings. "Dry" means plain or zinc plated (yellow dichromate - Specification JDS117) without any lubrication*.

Reference: JDS - G200.

PREVIEW - YOUFIXTHIS.COM

Download full manual at youfixthis.com

Diagnostics

Symptom: Diagnostic Symptoms

Caution: Avoid Injury! Engine radiator fluid is extremely hot during operation. The radiator fan may start to rotate at any time. Keep hands away from all moving parts when testing.

Note: When certain problems are detected by the ECU the System diagnostic light illuminates on the dashboard. The engine then goes into a "safe mode" which shuts off the fuel to number three cylinder and greatly reduces engine performance. For loss of power/ poor performance problems, connect machine to Service ADVISOR ™ and check for a fault code. Repair the cause before considering mechanical problems with the engine.

Symptom: Engine Starting Problems

Problem	Cause - Solution
1. Engine will not crank	a. Battery weak or discharged.
	b. Fusible link defective.
	c. Check key switch or wiring.
	d. Starter solenoid defective.
	e. Starter motor defective.
	f. Engine seized.
2. Engine will not start; spark plug wet	a. Check spark plug gap and spark (see Electrical section).
	b. Timing belt broken or has jumped time.
3. Engine is hard to start when cold.	a. Improper viscosity engine oil.
	b. System diagnostic light illuminated, check code(s) and repair.

Symptom: Engine Starting Problems

Problem	Cause - Solution
4. Engine cranks but will not start	a. Battery weak or discharged.
	b. Check spark (See Electrical section).
	c. Weak or faulty spark plug(s).
	d. Faulty high tension leads.
	e. Faulty ignition coil(s).
	f. Faulty electronic control unit.
	g. Contaminated fuel or faulty fuel supply system.
	h. Defective fuel pump.
	i. Clogged fuel line or filter.
	j. Fuel tank vent line clogged.
	k. Air filter restricted.
	l. Timing belt broken or has jumped time.
	m. Defective head gasket.
	n. Poor compression.
	o. Worn piston/piston rings stuck or not seated.
	p. Worn cylinder bore.
	q. Worn or burned valves, or improper clearance.

PREVIEW - YOUFIXTHIS.COM

Download full manual at youfixthis.com

Tests and Adjustments

Throttle Cable Adjustment

Purpose:

To ensure that throttle cable is allowing adequate travel for throttle lever to reach full open and slow idle positions.

Equipment:

- 1/2 in. Wrenches

Procedure:

1. Park machine safely. See “Park Machine Safely” in the Safety section.

2. Raise cargo box.

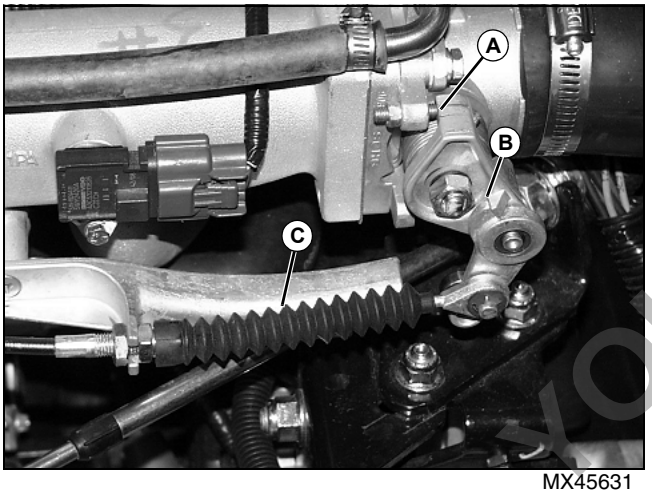

MX45631

3. With accelerator pedal up, control lever should be contacting stop screw (A). Stops (B) on the spring loaded “knee joint” should be touching each other. Deflect cable slightly with finger at (C) to check amount of slack in cable. There should be a minimal amount of slack in throttle cable 1-3 mm (0.040 - 0.120 in.).

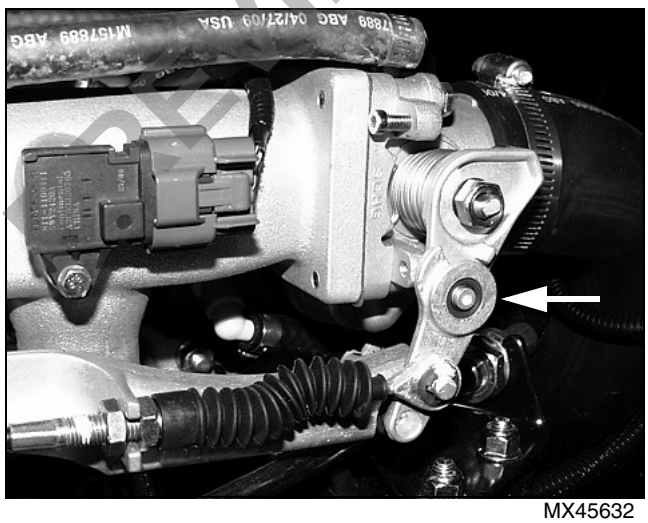

MX45632

4. Place a heavy object (heavy enough to keep pedal down on the pedal stop bolt) on the accelerator pedal or have an assistant hold the accelerator pedal down against the pedal stop bolt.

5. Press against “knee joint” of throttle lever (arrow) to see if throttle lever moves any further.

6. If slack on cable is incorrect in idle position or throttle lever does not go all the way to stop , adjust throttle cable.

Adjust Throttle Cable:

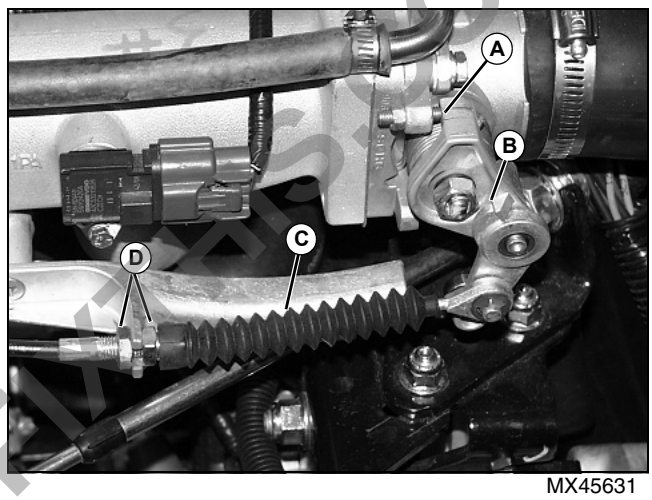

MX45631

1. With accelerator pedal up, control lever should be contacting stop screw (A). Stops (B) on the spring loaded “knee joint” should be touching each other. Deflect cable slightly with finger at (C) to check amount of slack in cable. If free play is not 1-3 mm (0.039 - 0.118 in.) loosen nuts (D) and adjust until proper freeplay is obtained.

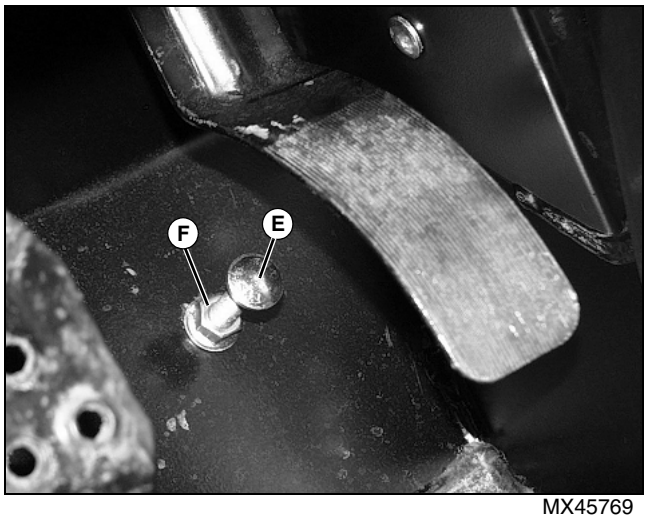

MX45769

2. Pedal stop bolt (E) limits pedal travel, preventing throttle parts from being strained from excessive travel. To adjust pedal stop:

Download full manual at youfixthis.com

Main Electrical Schematic

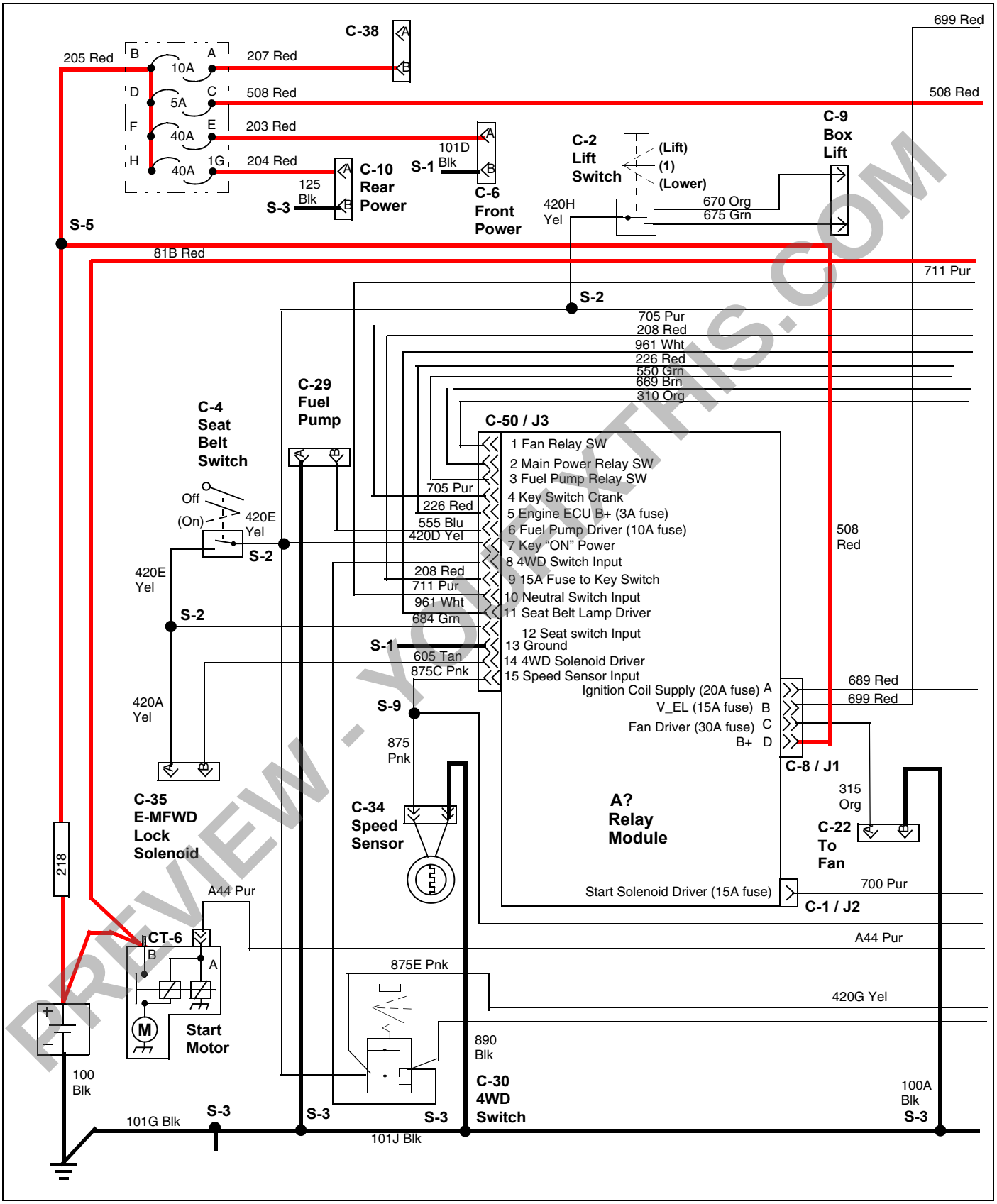

mif

PREVIEW - YOUFIXTHIS.COM

Download full manual at youfixthis.com

ECU Pin Locations

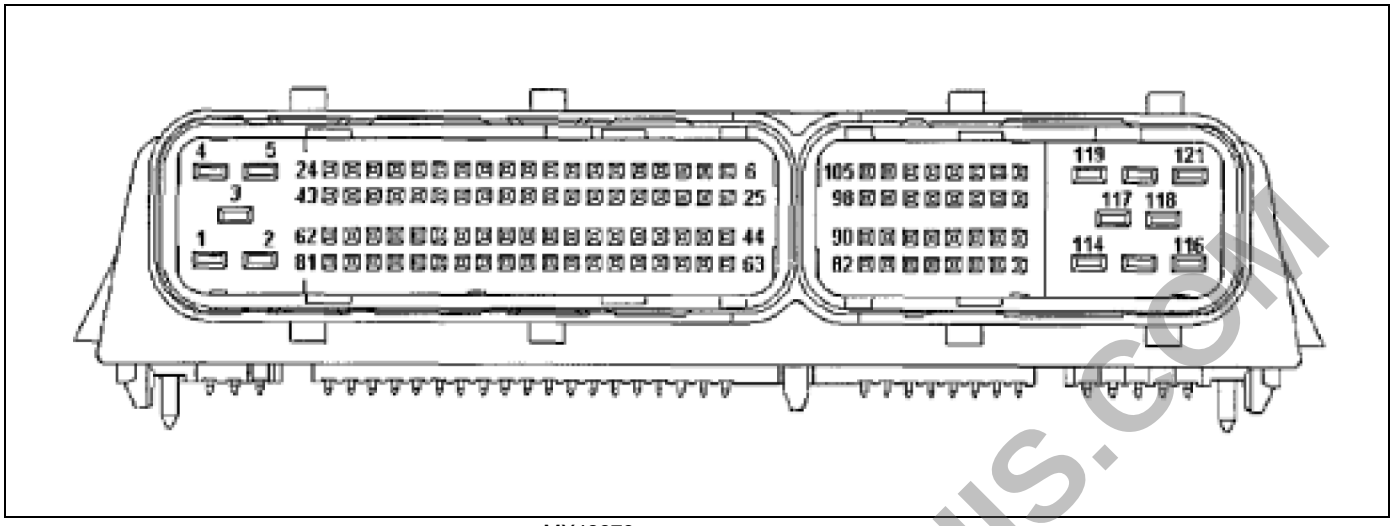

MX43879

Pin No.	Signal
1	Ground
2	Ground
3	Ignition Coil 3
4	Ignition Coil 1
5	Ignition Coil 2
6	Not Used
7	Not Used
8	O2 Sensor Signal Out
9	Not Used
10	Knock Sensor Out
11	Not Used
12	Not Used
13	Not Used
14	Not Used
15	Not Used
16	Not Used
17	Not Used
18	Not Used
19	Idle Air Control Coil A +
20	Idle Air Control Coil A -
21	Main Relay Power in (V_EL)
22	Ignition Switch Power In
23	Injector 3 Control
24	Injector 1 Control
25	Not Used
26	Not Used
27	Crank Sensor Ground
28	Not Used
29	Crank Sensor Signal In
30	Cam Sensor In
31	Coolant Temp Sensor In
32	Throttle Position Sensor In
33	Not Used
34	Not Used
35	Idle Air Control Coil B +

PREVIEW - YOUFIXTHIS.COM

Download full manual at youfixthis.com

General Information

Reading Electrical Schematics

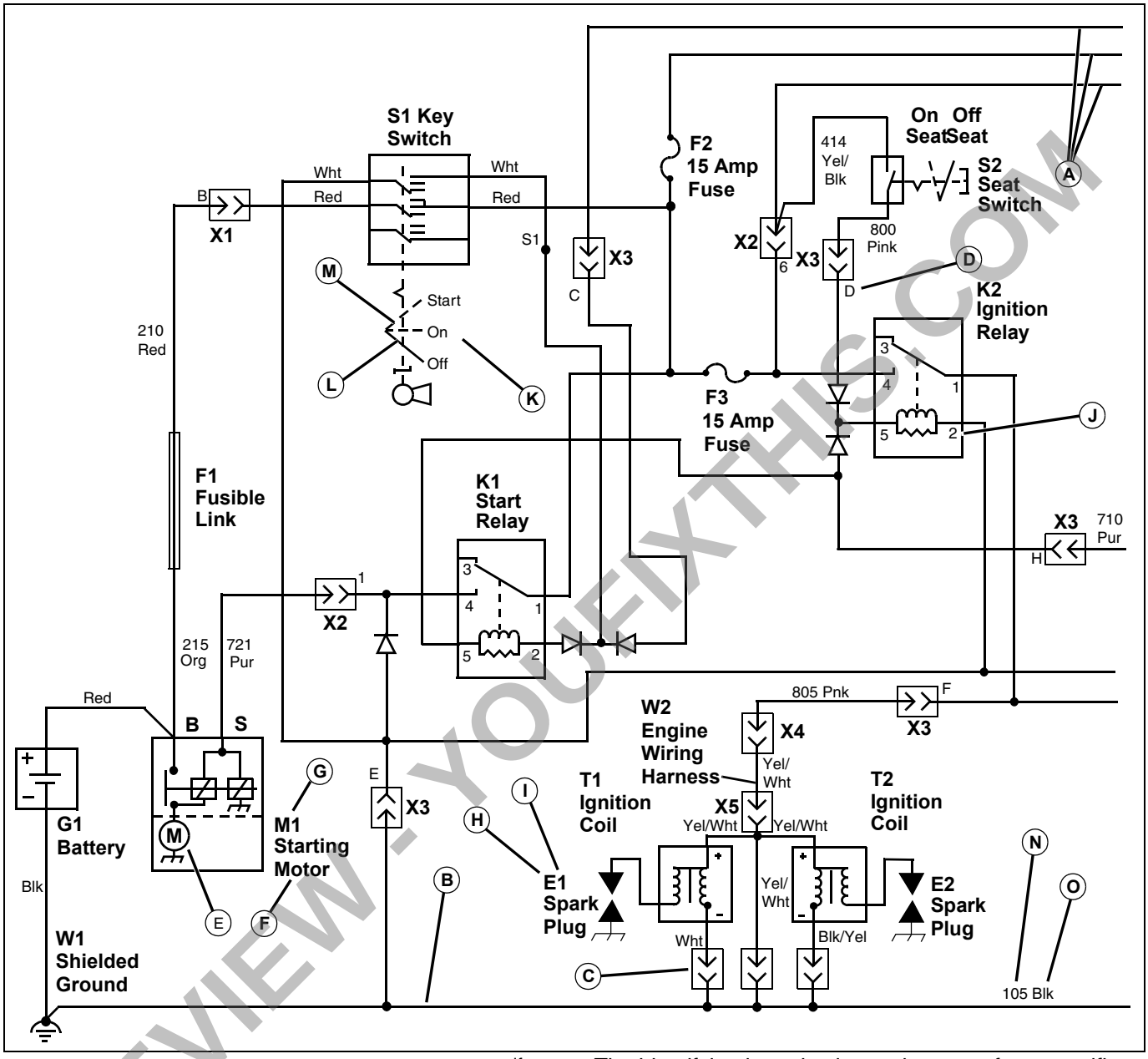

mif

The schematic is made up of individual circuits laid out in a sequence of related functions. It is formatted with all power wires (A) across the top and all ground wires (B) across the bottom. Current flow is generally from top to bottom through each circuit and component. All components are shown in the off position. The diagram does not list connector (C) information unless needed to avoid confusion. If the connector is shown, the number next to it is the terminal pin location (D) in the connector.

Each component is shown by a symbol (E), its name (F), and an identification code (G). The identification code contains a device identifying letter (H) and number (I). The identifying letter is always the same for a specific component, but the identifying numbers are numbered consecutively from upper left to lower right. The terminal designation (J) is placed directly inside or outside the symbol next to the connecting wire path. Switch positions (K) are also placed directly inside or outside the symbol. The solid line (L) shows the position the switch is currently in and dash lines (M) represent other switch positions.

The circuit number (N) and wire color (O) of the wires are shown directly next to the wire path.

The same component name and identification code are used consistently on all diagrams in this section. Components can be easily cross-referenced.

PREVIEW - YOUFIXTHIS.COM

Download full manual at youfixthis.com

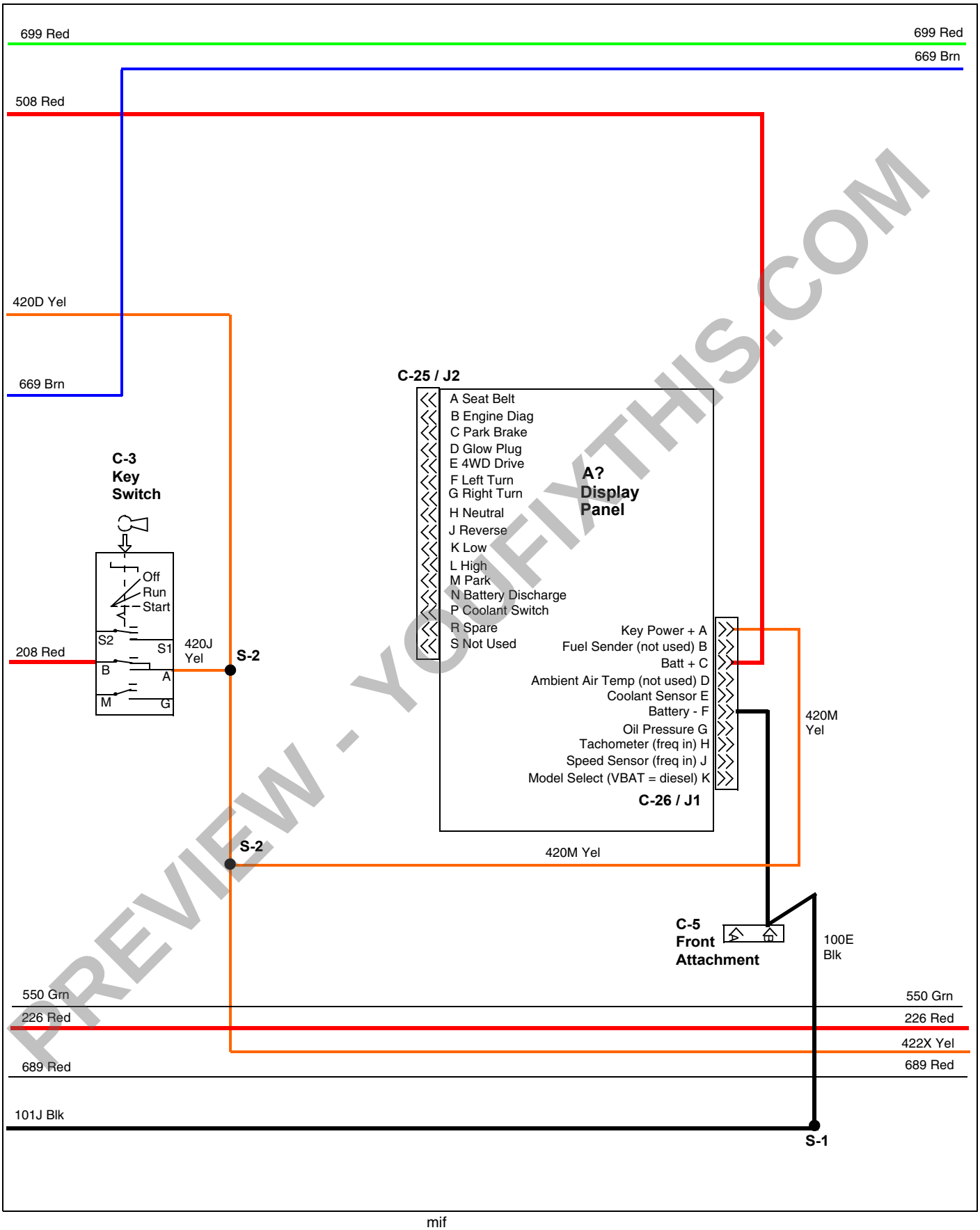

mif

PREVIEW - YOUFIXTHIS.COM

Download full manual at youfixthis.com

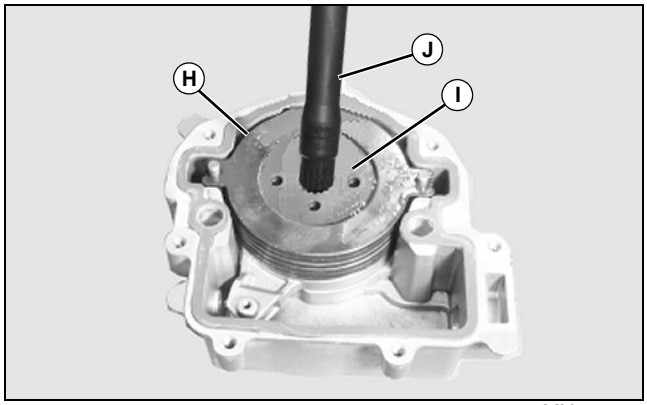

MX45767

10.Install anchor plate (H) to actuator.

11.Install five friction disks (I), alternating with remaining five anchor plates.

12.Center friction disks within anchor plates.

13.Insert splined end of disk alignment tool (J) through friction disks, aligning disk splines. Ensure that tool is inserted through all disks.

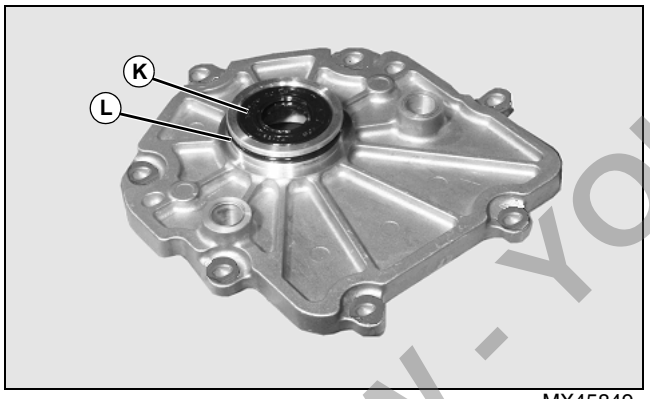

MX45849

14.Lubricate and install new shaft seal (K) to park brake housing cover.

15.Lubricate and install new O-ring (L) to cover.

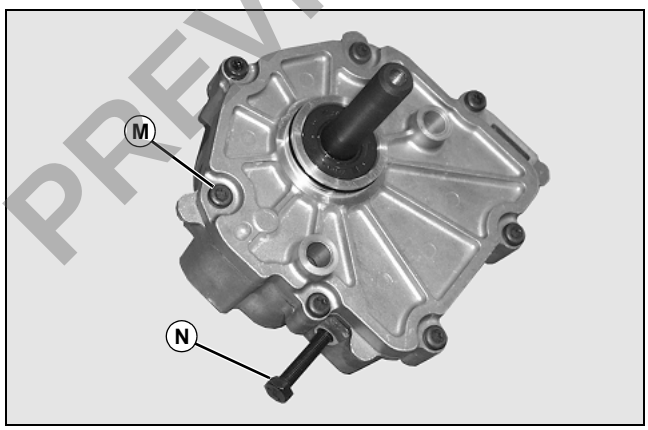

MX45219

16.Install cover over alignment tool to housing, and secure with seven TORX® bolts (M). Tighten bolts to specification.

17.Install brake disk holding tool (N) to plug port.

18.Turn holding tool in against brake actuator arm to apply park brake only until disk alignment tool is difficult to rotate by hand. Do not exceed maximum specified torque.

19.Remove disk alignment tool.

Torque Specifications

End Plate to Housing Bolt . . . . . 19 N•m (168 lb-in)
Friction Disk Holding Screw (max). . . . 8 N•m (60 lb-in.)

Required Tools

Special or Required Tools

Tool Name	Tool No.	Tool Use
Park Brake Installation Kit	JDG11066	Tool kit includes park brake alignment tool and pack holding tool.
Park Brake Disk Alignment Tool	JDG11066P	Alignment tool centers friction disk assembly and aligns disk splines for park brake installation.
Park Brake Pack Holding Tool	JDG11066P2	Tool presses brake plates together to maintain alignment during park brake installation.

Park Brake Installation:

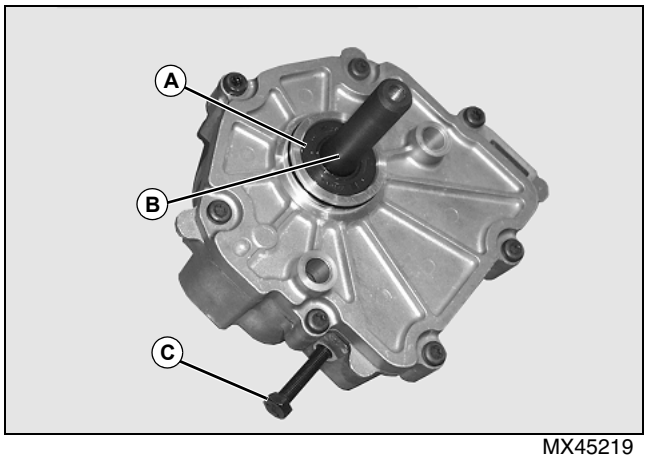

MX45219

1. Lubricate park brake housing cover shaft seal (A).

2. Insert brake disk alignment tool (B) to center and align brake disk stack if not previously installed. Ensure that tool is inserted through all disks.

3. Install brake disk holding tool (C) to plug port if not previously installed. Turn holding tool in against brake actuator arm to apply park brake only until disk alignment

Download full manual at youfixthis.com

PREVIEW - YOUFIXTHIS.COM

INDEX

Numerics

4WD Solenoid Test 223

A

Alternative lubricants 14
Avoid Injury
  Rotating Blades, Augers And PTO Shafts 4

B

Ball Joint Removal and Installation 334
Battery
  Charging 210
  Clean 211
  Load Test 211
  Test 209
Battery Removal and Installation 415
Brake Pedal Switch Test 218
Brakes
  Bleeding 365
  Bleeding Master Cylinder 366
  Brake Caliper Removal and Replacement 376
  Brake Disk Removal and Inspection 378
  Brake Line Removal and Replacement 370
  Brake Pad Replacement 367
  Brake Pedal Removal and Installation 379
  Checking Brake Fluid Level 363
  Component Location
    System 355
    System Front 356
    System Rear 358
  Diagnostics 361
  Master Cylinder Removal and Installation 368
  Master Cylinder Rod Adjustment 364
  Park Brake Lever Removal and Installation 381
  Specifications 353
  Tests and Adjustments 363
  Theory of Operation 361
Break-in engine oil
  4-cycle gasoline 13
Bulb Test 221

C

CV Joint and Boots (Front Axle Drive Shafts)
  Disassembly and Assembly 307
CV Joint and Boots (Rear Axle Drive Shafts)
  Disassembly and Assembly 308
Camshaft
  Removal and Installation 73
Cargo Box Lift Kit
  Raise/Lower Switch Test 219
Cargo Box Removal and Installation 416
Center Console Removal and Installation 413
Charging Circuit Diagnosis 138
Clutch Theory of Operation 252
Clutch, Driven
  Component Location 242
  Disassembly and Assembly 261
Clutch, Primary Drive
  Cleaning 257
  Component Location 241
  Repair 260
Component Location
  Brake System 355
    Front 356
    Rear 358
  Drive Clutch 241
  Driven Clutch 242
  EMFWD Front Differential 234
  Front Axle 230
  Front Drive Gear Box 233
  Fuel System 397
  MFWD Driveline 232
  Park Brake 359
  Park Brake Housing 360
  Power Train 229
  Seat and Seat Support 390, 392, 394
  Shift Linkage 240
  Transaxle
    Input Components 239
  Transaxle Differential Components 238
  Transaxle Gear Components 236
Connecting Rod
  Bearing Clearance Check 78
  Side Play Check 78
Control Lever Housing Removal and Installation 414
Coolant Drain and Flush Procedure 402
Coolant Fill and Bleed 48, 404
Coolant, Engine 15
Cooling Fan Removal and Installation 405
Crankshaft
  Front Oil Seal Removal and Installation 72
  Main Bearing Clearance Check 77
  Rear Oil Seal Removal and Installation 88
  Removal and Installation 84
Cylinder
  Leak-Down Test 43
Cylinder Bore
  Repair 84
Cylinder Head
  Removal and Installation 58

D

Dash Panel Removal and Installation 406
Diagnosis
  Engine 37
Differential oil 14
Dispose of Waste Properly 4

PREVIEW - YOUFIXTHIS.COM

Download full manual at youfixthis.com

PREVIEW - YOUFIXTHIS.COM

Download full manual at youfixthis.com

T- Rear Power
U- C-39
V- C-12 Neutral
W- Reverse Pedal
X- Speed Sensor
Y- C-37
Z- C-3 Key Switch
AA- C-40
AB- C-6 Front Power
AC- C-5 Front Attachments
AD- C-13 Fuse Block
AE- Box Lift Switch

PREVIEW - YOUFIXTHIS.COM

Download full manual at youfixthis.com

Important: Avoid Damage! Decrease charge rate if battery gasses or bubbles excessively or becomes too warm to touch.

9. Check specific gravity after 30 minutes (60 minutes for maintenance-free battery).

Results:

- If more than 50 point variation between cells, replace battery;
- If less than 50 point variation between cells, go to Step 8 and 9.

Note: If battery was discharged at slow or unknown rate, charge battery at 10 - 15 amps for 6 - 12 hours. (Maintenance-free battery: 12 - 24 hours. If battery was discharged at fast rate, charge at 20 - 25 amps for 2 - 4 hours. (Maintenance-free battery: 4 - 8 hours.)

10.Continue to charge battery until specific gravity is 1.230 - 1.265 points.

11.Load test battery. See “Battery Load Test” on page 211.

12.Install battery.

Battery Load Test

Equipment:

- JT05685 Battery Tester or equivalent

Procedure:

1. Park machine safely. See “Park Machine Safely” in the Safety section.
2. Cargo box raised and locked.
3. Clean cable ends, battery terminals and top of battery.
4. Remove battery.

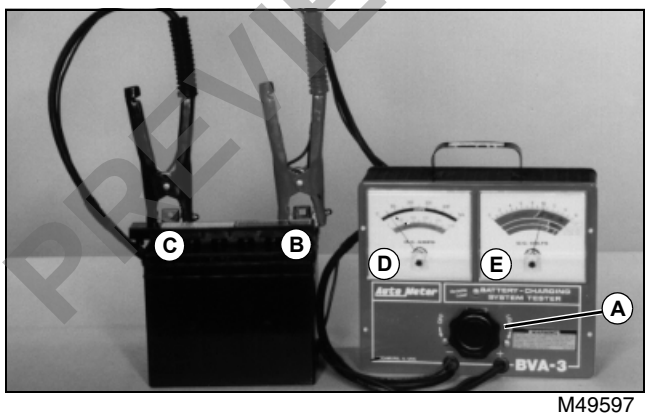

M49597

5. Turn load knob (A) counterclockwise to off position.
6. Connect tester positive (Red) cable to battery positive (+) terminal (B).
7. Connect tester negative (black) cable to battery negative (-) terminal (C).
8. Turn load knob (A) of tester clockwise (in) until amperage reading (D) is equal to:
   - Cold cranking amperage rating of battery (use blue scale), or:
   - Three times ampere-hour rating (use black scale).
9. Hold for 15 seconds and turn load knob (A) of tester counterclockwise to off position.
10. Repeat Steps 7 and 8 above and read condition of battery at DC Volts scale (E).

Results:

- If battery does not pass test and has not been charged, charge battery and retest.
- If battery does not pass test and has been charged, replace battery.

Clean Battery

1. Remove battery from machine.

Note: Keep cleaning solution out of battery cells.

2. Clean battery case, battery terminals, cable ends, bracket and/or battery box with a solution of one part baking soda and four parts water.
3. Rinse all parts with clean water. Let dry thoroughly.
4. Apply petroleum jelly to battery terminals to prevent corrosion.

Regulated Voltage Output Test

Reason

To check the regulated voltage (charging) output of the alternator.

Special or Required Tools

Tool Name	Tool No.	Tool Use
Digital Multimeter	JT05791A	Used to measure voltage.

Procedure

1. Park machine on level surface.
2. Key switch OFF.
3. Park brake LOCKED.
4. Remove surface charge from battery by turning on work lights for one minute. If there are no work lights, crank engine until it operates and then turn off engine.
5. Set JT05791A Digital Multimeter to measure voltage.

PREVIEW - YOUFIXTHIS.COM
Download full manual at youfixthis.com

U- Snap Ring (2 Used)
V- Ball Joint - Upper (2 Used)
W- Snap Ring (2 Used)
X- Ball Joint Nut M14 (2 Used)
Y- Ball Joint Nut M12 (2 Used)
Z- Tie Rod Ball Stud Lock Nut (2 Used)
AA- Drive Hub/Rotor (2 Used)
AB- Washer (2 Used)
AC- Castle Nut (2 Used)
AD- Cotter Pin (2 Used)
AE- E-Clip (4 Used)
AF- Brake Pad (4 Used)
AG- O-Ring (4 Used)
AH- Brake Sliding Pin (4 Used)
AI- O-Ring (4 Used)
AJ- Brake Caliper (2 Used)
AK- Banjo Fitting Bolt (2 Used)
AL- Copper Crush Washer (4 Used)

PREVIEW - YOUFIXTHIS.COM

Download full manual at youfixthis.com

PREVIEW ONLY

You're viewing 18 of 430 pages

The full manual includes:

- All 430 pages, complete
- Searchable PDF (find any keyword)
- No watermarks
- Instant download
- Print-ready quality

GET FULL MANUAL NOW

John Deere 825i Technical Manual

Scan or click anywhere
youfixthis.com

Click anywhere on this page to get the full manual