Z425, Z435, Z445, and Z465 EZtrak Residentia Mower (SN. from 100001)

TECHNICAL MANUAL

EZtrakl Mower models Z425, Z445, Z465, Z435 (SN. 100001-)

TM113019 01 DEC 15 (ENGLISH)

PREVIEW - YOUFIXTHIS.COM

John Deere Commercial and Consumer Equipment Lawn and Garden
Pinted by Belgreen

TM113019

Download full manual at youfixthis.com

Table of contents

FOREWORD
Section 10 - GENERAL INFORMATION
Group 05 - Safety
Group 10 - General Specifications
Group 15 - Fuel and Lubricants
Group 20 - Machine Specifications
Section 20 - ENGINE REPAIR B&S
Group 10 - Repair Engine Twin Cylinder
Section 25 - ENGINE REPAIR KAWASAKI
Group 05 - Specifications
Group 10 - Tools and Materials
Group 15 - Repair
Section 30 - ELECTRICAL REPAIR
Group 10 - Component Location
Group 20 - Wiring Harness
Section 40 - POWER TRAIN REPAIR
Group 10 - Component Location
Group 20 - Repair
Section 50 - ATTACHMENTS REPAIR
Group 10 - Component Location
Group 20 - Repair
Section 60 - MISCELLANEOUS REPAIR
Group 10 - Component Location
Group 20 - Repair
Section 220 - ENGINE DIAGNOSIS, TESTS, AND ADJUSTMENTS B&S
Group 10 - Diagnosis
Group 20 - Tests and Adjustments
Section 225 - ENGINE DIAGNOSIS, TESTS, AND ADJUSTMENTS KAWASAKI
Group 10 - Component Location
Group 20 - General Information
Group 30 - Theory of Operation
Group 40 - Diagnostics
Group 50 - Tests and Adjustments
Section 230 - ELECTRICAL DIAGNOSIS, TESTS, AND ADJUSTMENTS
Group 10 - Theory of Operation
Group 20 - Diagnosis
Group 30 - Tests and Adjustments
Group 40 - Wiring Schematics
Group 50 - Connector Information
Section 240 - POWER TRAIN DIAGNOSIS, TESTS, AND ADJUSTMENTS
Group 10 - Theory of Operation
Group 20 - Diagnosis
Group 30 - Tests and Adjustments
Section 250 - ATTACHMENTS DIAGNOSIS, TESTS, AND ADJUSTMENTS
Group 10 - Diagnosis
Group 20 - Tests and Adjustments
Section 299 - SERVICE TOOLS AND KITS
Group 10 - Service Tools

PREVIEW - YOUFIXTHIS.COM

Download full manual at youfixthis.com

Group 05 - Safety

Recognize Safety Information



Safety-alert symbol

This is a safety-alert symbol. When you see this symbol on your machine or in this manual, be alert to the potential for personal injury.

Follow recommended precautions and safe operating practices.

Understand Signal Words



Signal Words

A signal word—DANGER, WARNING, or CAUTION—is used with the safety-alert symbol. DANGER identifies the most serious hazards.

DANGER or WARNING safety signs are located near specific hazards. General precautions are listed on CAUTION safety signs. CAUTION also calls attention to safety messages in this manual.

Follow Safety Instructions

PREVIEW - YOUFIXTHIS.COM

Download full manual at youfixthis.com

Straight Fitting or Special Nut Torque Chart

STRAIGHT FITTING OR SPECIAL NUT TORQUE CHART		
Thread Size	**N˙m**	**lb-ft**
3/8-24 UNF	8	6
7/16-20 UNF	12	9
1/2-20 UNF	16	12
9/16-18 UNF	24	18
3/4-16 UNF	46	34
7/8-14 UNF	62	46
1-1/16-12 UN	102	75
1-3/16-12 UN	122	90
1-5/16-12 UN	142	105
1-5/8-12 UN	190	140
1-7/8-12 UN	217	160

→NOTE:

Torque tolerance is ± 10%.

PREVIEW - YOUFIXTHIS.COM

Download full manual at youfixthis.com

Gasoline Engine Oil

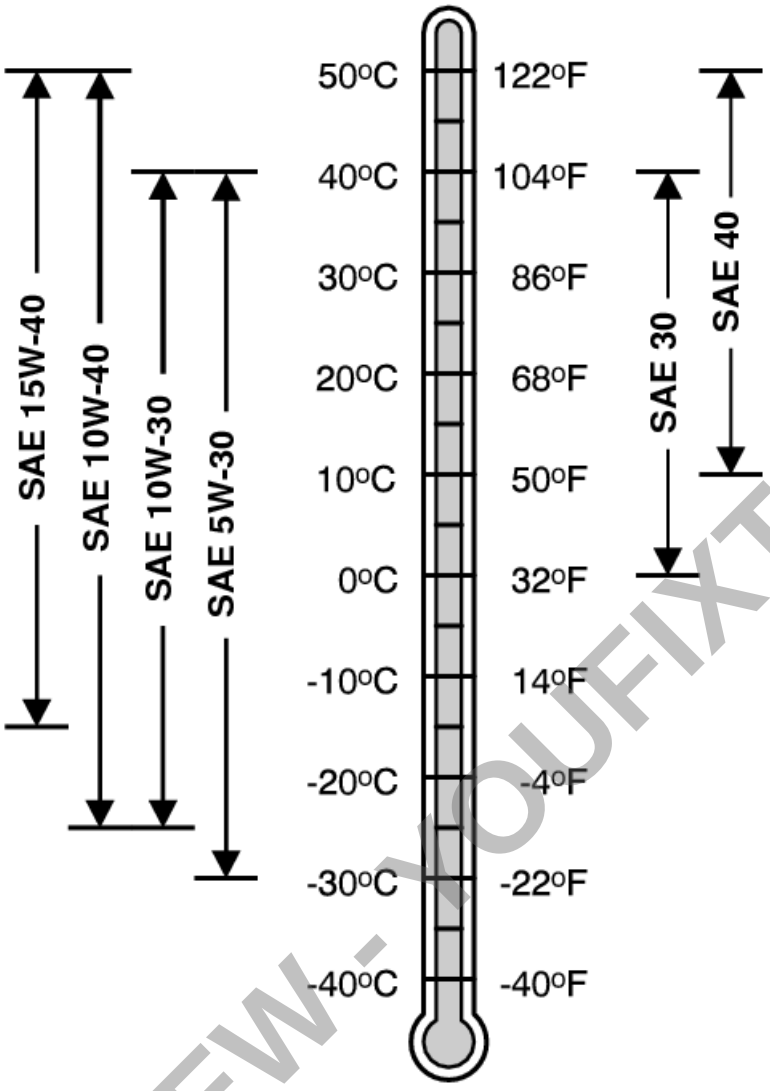

Oil Viscosities for Air Temperature Ranges

Use oil viscosity based on the expected air temperature range during the period between oil changes.

Using single viscosity grade oils such as SAE 30 or SAE 40 can reduce oil consumption in air cooled engines.

John Deere Turf-Gard ™ is preferred.

The following oils are also recommended:

- John Deere Plus-4 ™
- John Deere Plus-50 ™ II

Other oils may be used if they meet one or more of the following:

- ILSAC GF-5
- API Service Category SN
- API Service Category SM
- API Service Category SL
- API Service Category SJ

PREVIEW - YOUFIXTHIS.COM

Download full manual at youfixthis.com

Group 20 - Machine Specifications

Machine Specifications (S.N. -130000)

→NOTE:

Specifications and design subject to change without notice.

General Specifications

	Z425, Z445, and Z465
Ground Speed:	
Forward	0—13.7 km/h (0—8.5 mph)
Reverse	0—5.6 km/h (0—3.5 mph)

Engine:	
Make	Briggs & Stratton
Engine Power Information	http://www.briggsandstratton.com
Type	Gas
Model	44L777—Z425 44Q977—Z445, Z465
Cylinders	v-twin
Dead Idle Speed	1300 ± 100 rpm
Low Idle Speed (Governed)	1750 ± 100 rpm
High Idle Speed	3350 ± 100 rpm
Displacement	0.724 L (44.2 $in.^3$)
Bore	79.5 mm (3.13 in.)
Stroke	73.40 mm (2.89 in.)
Lubrication	Pressurized
Crankcase Capacity	1.8 L (1.9 qt.)
Crankcase (with Filter)	1.9 L (2.0 qt.)
Cooling	Air Cooled
Air Cleaner	Paper with Foam Element—Z425 Paper Element—Z445, Z465
Engine Shut Off	Key Switch

Fuel System:	
Type	Mechanical Vacuum Pump
Tank Capacity	13.2 L (3.5 gal.)

Electrical System:	
Type	12 Volt Negative Ground
Stator Output	6—16.6 amp regulated at 12.2—13.8 VDC
Battery	12-volt
Battery Type	BCI Group U1
Spark Plug Torque	20 N·m (180 lb.-in.)
Spark Plug Gap	0.76 mm (0.030 in.)
Ignition Coil Air Gap	0.20—0.30 mm (0.008—0.012 in.)

Power Train:	
Transaxle	Hydro-Gear ZT2800
Transaxle Type	Hydraulic Infinite Variable Speed
Drive	2 Transaxles (Mirror Image of Each Other)
Brake Type	Internal Cogged

PREVIEW - YOUFIXTHIS.COM

Download full manual at youfixthis.com

Steering Control Components

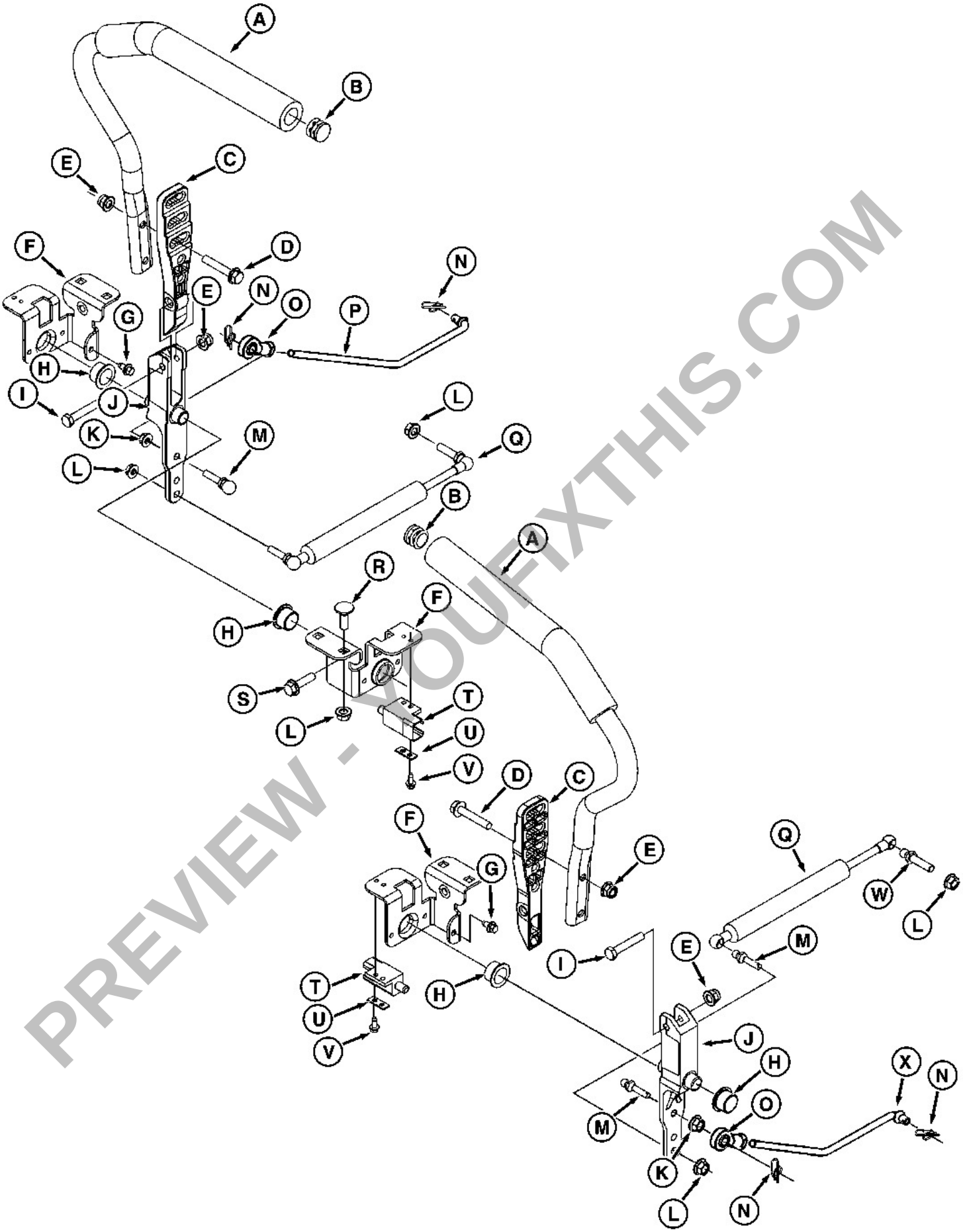

PREVIEW - YOUFIXTHIS.COM

Steering Control Components

LEGEND:

A	Handlebar (2 used)
B	Plug (2 used)

Download full manual at youfixthis.com

restricts air flow to the carburetor, the low pressure in the venturi drops even further, resulting in a higher pressure differential between the fuel bowl and the venturi. Therefore, a dirty air filter can enrich the air/fuel mixture to the point that performance will drop.

Engines with internally vented carburetors will not exhibit rich running conditions with a dirty air filter. When a dirty air filter restricts air flow to the throat of the carburetor, an equal reduction will be applied to the bowl vent. Internally vented carburetors maintain the pressure differential between the bowl and the venturi resulting in a consistent air/fuel mixture over the life of the air filter.

Vent Tube Location

With an externally vented carburetor, a rich or lean run condition could also be caused by the location of the float bowl vent tube. The purpose of the vent tube is to allow atmospheric pressure into and out of the float bowl. Air from the cooling fan at the vent tube opening can cause a pressure increase or decrease on the fuel in the float bowl and cause the engine to run rich or lean. Check for bulletins and relocate the float bowl vent tube to a location away from any source of turbulence.

Engine Will Not Crank, V-Twin

66

Engine Will Not Crank (V-Twin)

Symptom	Problem	Solution
Engine Will Not Crank	Battery	a. Charge and test battery. (See Battery Charge , and Battery Load Test .)
		b. Replace the battery if it will not take or hold a charge.
	Starting motor does not rotate when ignition switch is turned to start position.	a. Cranking circuit problem. (See Cranking Circuit Operation (S.N. -120000) , or Cranking Circuit Operation, with B&S Engines (S.N. 120001-) .)
		b. Key switch malfunction. (See Key Switch Test .)
		c. Starting relay malfunction. (See Start Relay Test .)

PREVIEW - YOUFIXTHIS.COM

Download full manual at youfixthis.com

Group 30 - Theory of Operation

Engine Oil Flow Chart

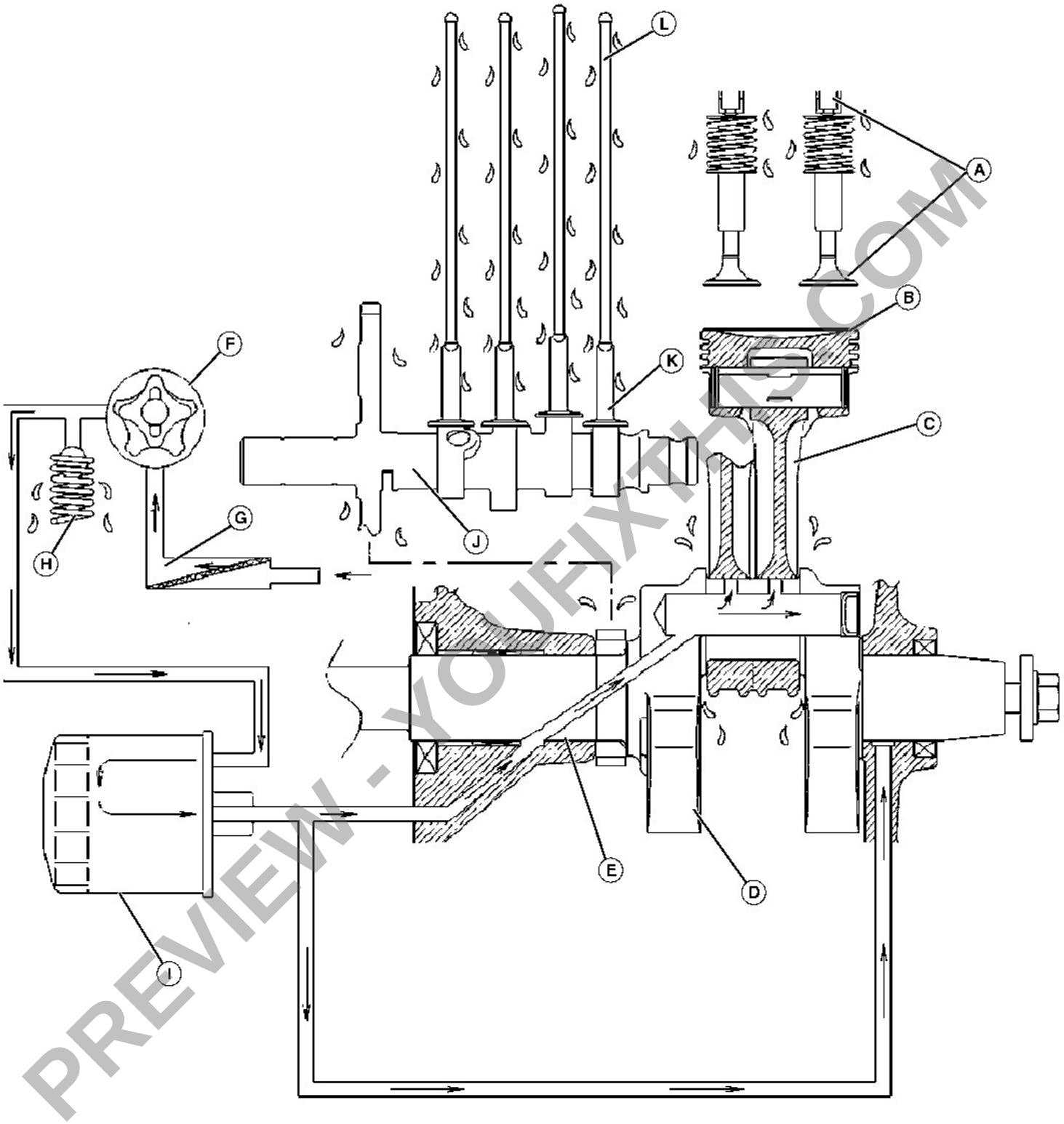

PREVIEW - YOUFIXTHIS.COM

Engine Oil Flow Chart

LEGEND:

A	Rocker Arm and Valve
B	Piston
C	Connecting Rod
D	Crankshaft
E	Crankshaft Main Journal
F	Oil Pump
G	Pickup Screen
H	Oil Pressure Relief Valve
I	Oil Filter
J	Camshaft

Download full manual at youfixthis.com

Group 40 - Wiring Schematics

Summary of References

- Schematic Legend
- Main Electrical Schematic (S.N. -120000)
- Main Electrical Schematic, with B&S Engines (S.N. 120001-)
- Main Electrical Schematic, Z445, Z465 (S.N. 150001-)

Schematic Legend

Components:

DEFINITIONS:

D1, D1	Diode
D3	Diode (S.N. 120001-)
E1, E2	Spark Plug
F1	Fuse 20A
F2	Fuse 20A
F3	Fuse 7.5A
F4	Fuse 7.5A (option)
G1	Battery
G2	Stator
K1	Start Relay
K2	Interlock Relay
L1	Left Headlight (option)
L2	Right Headlight (option)
M1	Starting Motor
N1	Voltage Regulator/Rectifier
P1	Hourmeter
SW1	Key Switch
SW2	Left Handle Neutral Lock Switch
SW3	Right Handle Neutral Lock Switch
SW4	Park Brake Switch
SW5	Seat Switch
SW6	PTO Switch
SW99	Headlight Switch (option)
T1, T2	Ignition Coil
W2	Engine Ground
Y1	Fuel Shutoff Solenoid
Y2	PTO Clutch
Y3	Start Motor Solenoid (Z445, Z456 S.N. 150001-)

Connectors:

DEFINITIONS:

C4E	W2 Engine Wiring Harness to W1 Main Wiring Harness
C4M	W1 Main Wiring Harness to W2 Engine Wiring Harness

Wiring Harnesses:

DEFINITIONS:

W1	Main Wiring Harness
W2	Engine Wiring Harness
W3	Headlight Wiring Harness (option)

PREVIEW - YOUFIXTHIS.COM

Download full manual at youfixthis.com

Item	Measurement	Specification
		(200 lb·in)
Breather Cover Screw	Torque	6 N·m
		(55 lb·in)
Oil Pump Cover Screws	Torque	6 N·m
		(50 lb·in)
Oil Sump Cover Screws	Torque	23 N·m
		(200 lb·in)
Oil pressure	Pressure	103—345 kPa
		(15—50 psi)
Starter (Inertia) Minimum Brush	Length	3.2 mm
		(0.125 in)
Starting Motor Through Bolts	Torque	6 N·m
		(50 lb·in)
Starting Motor Mounting Bolts	Torque	16 N·m
		(140 lb·in)

Remove and Install Air Cleaner

[1] -

IMPORTANT:

DO NOT use petroleum solvents, such as kerosene, to clean foam pre-cleaner. They may cause foam to deteriorate. DO NOT oil paper cartridge. DO NOT use pressurized air to clean or dry paper cartridge. Replace the paper cartridge if it is dirty.

Remove cover assembly.

[2] - Remove filter cartridge. Clean by tapping gently on a flat surface. Replace if dirty.

[3] - ELS Models only:

a. Remove foam pre-cleaner.
b. Wash pre-cleaner in liquid detergent and water.
c. Squeeze it dry in a clean cloth.
d. Saturate it in clean engine oil. Wrap it in a clean, absorbent cloth. Squeeze to remove excess oil.

[4] - Installation is the reverse of removal.

Remove and Install Upper Blower Housing (ELS)



LEGEND:
A Screen Tabs

Screen Tabs

Remove:

[1] - Press inward on the stationary screen tabs (A) and remove the stationary screen.

Download full manual at youfixthis.com
PREVIEW - YOUFIXTHIS.COM

Foreword

This manual is written for an experienced technician. Essential tools required in performing certain service work are identified in this manual and are recommended for use.

Live with safety: Read the safety messages in the introduction of this manual and the cautions presented throughout the text of the manual.



CAUTION:

This is the safety-alert symbol. When you see this symbol on the machine or in this manual, be alert to the potential for personal injury.

Technical manuals are divided in two parts: repair and operation and tests. Repair sections tell how to repair the components. Operation and tests sections help you identify the majority of routine failures quickly.

Information is organized in groups for the various components requiring service instruction. At the beginning of each group are summary listings of all applicable essential tools, service equipment and tools, other materials needed to do the job, service parts kits, specifications, wear tolerances, and torque values.

Technical Manuals are concise guides for specific machines. They are on-the-job guides containing only the vital information needed for diagnosis, analysis, testing, and repair.

Fundamental service information is available from other sources covering basic theory of operation, fundamentals of troubleshooting, general maintenance, and basic type of failures and their causes.

PREVIEW - YOUFIXTHIS.COM

Download full manual at youfixthis.com

Specifications

Item	Measurement	Specification
Blower Housing Screws	Torque	9 N·m (80 lb·in)
Carburetor to Intake Manifold Studs	Torque	7 N·m (65 lb·in)
Air Cleaner Elbow to Carburetor	Torque	7 N·m (65 lb·in)
Intake Manifold Cap Screws	Torque	9 N·m (80 lb·in)
Fuel Shutoff Solenoid	Torque	5 N·m (45 lb·in)
PTO Clutch Bolt	Torque	68 N·m (50 lb·ft)
Engine Oil with Filter	Capacity	1.9 L (2 qt)
Air Guide Screws	Torque	7 N·m (62 lb·in)
Cylinder Head Bolt Increments	Torque	9 N·m (80 lb·in)
Cylinder Head Bolt Final	Torque	25 N·m (220 lb·in)
Rocker Arm Screws	Torque	11 N·m (100 lb·in)
Valve Cover Screws	Torque	11 N·m (100 lb·in)
Spark Plug	Torque	20 N·m (180 lb·in)
Cylinder Head (maximum)	Out-of-Flat	0.1 mm (0.004 in)
Valve Guide (maximum)	ID	6.09 mm (0.240 in)

Valve Specifications:

Valve Guide Wear Limits	ID	6.10 mm (0.240 in)
Valve Stem Wear Limits Intake	OD	5.92 mm (0.233 in)
Valve Stem Wear Limits Exhaust	OD	5.92 mm (0.233 in)
Valve Seat Width	Width	1.2—1.6 mm (0.047—0.063 in)
Valve Margin (minimum)	Width	0.4 mm (0.016 in)
Valve Guide Depth	Distance	7.10 mm (0.280 in)
Valve Face Angle	Angle	45°
Valve Seat Narrowing Angle	Angle	30°
Valve Spring Free Length (minimum)	Length	33.50 mm (1.319 in)
Compression and Oil Ring End Gap	Gap	0.76 mm (0.030 in)
Crankpin Bearing Wear Limit	ID	38.15 mm

PREVIEW - YOUFIXTHIS.COM

Download full manual at youfixthis.com

IMPORTANT:

Avoid Damage! Remove combustion chamber deposits using a soft, hand wire brush or scraper.

Remove combustion chamber deposits from combustion chamber and around valves using a soft, hand wire brush or scraper. With piston at top dead center (TDC), remove combustion chamber deposits from top of piston.

[2] - Inspect cylinder head for broken fins or cracks. Repeat procedure for other cylinder head and cylinder.

[3] - Be sure that all gasket material is removed from cylinder head.

[4] - Using a surface plate or straight edge (A), check cylinder head mounting surface for distortion in several areas. If mounting surfaces are distorted more than specification, replace cylinder head.

Item	Measurement	Specification
Cylinder Head (maximum)	Out-of-Flat	0.1 mm (0.004 in.)

[5] -

→NOTE:

Valve guides are not serviceable.

Inspect valve guides by inserting plug gauge into valve guide. If plug gauge inserts **6.4 mm (0.25 in.)** or more, the cylinder head must be replaced. Measure valve guides if plug gauge is not available. Replace cylinder if inside dimension specification is larger than reject dimension for both intake and exhaust valve guides.

Item	Measurement	Specification
Valve Guide (maximum)	ID	6.09 mm (0.240 in.)

Remove Valve

LEGEND:

A	Rocker Screw
B	Valve Spring Compressor
C	Split Retainer

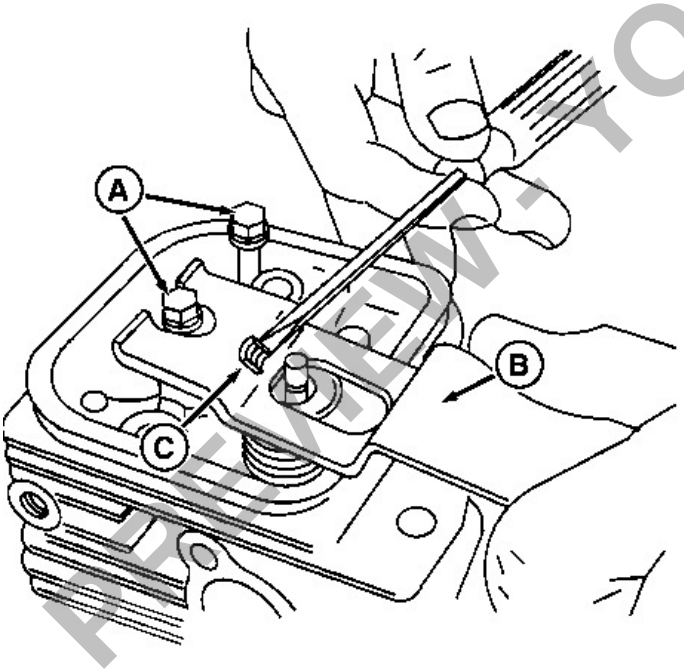

Cylinder Head Rocker Screws and Valve Spring

[1] -

IMPORTANT:

Avoid Damage! Mark push rods for reassembly in their original position. Intake push rods are aluminum. Exhaust push rods are steel. Do not interchange the push rods.

To remove the valves, place cylinder head on workbench with support to hold valves in place.

[2] - Reinstall rocker screws (A) into cylinder head. Do not tighten. Slip end of valve spring compressor (B) under the screw of

PREVIEW - YOUFIXTHIS.COM

Download full manual at youfixthis.com

Assemble Inertia Starting Motor

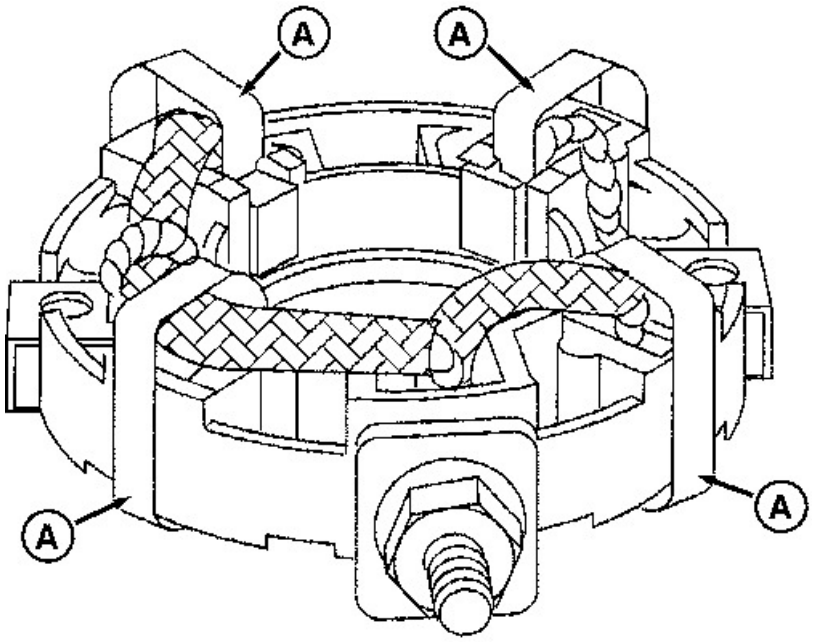

Brush Retainers

LEGEND:

A	Retainers

[1] -

→NOTE:

Brush retainers (A) can be made from standard size paperclips. Straighten and cut to length 2-1/2 in. Bend into a U-shape with sides of 1 in. and bottom 1/2 in. in length.

Place brushes in their slots and hold brushes with retainers.

[2] -

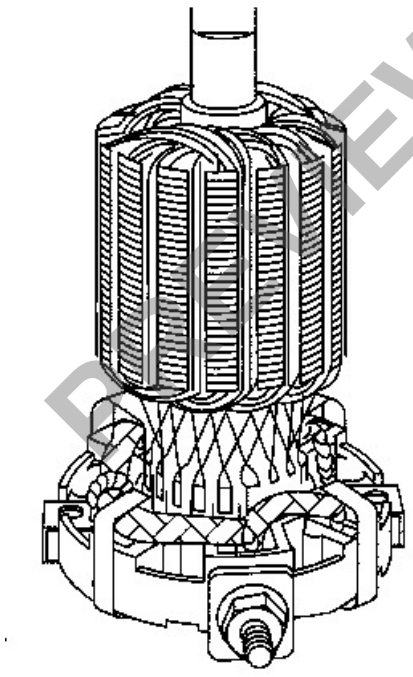

Armature and Brush Holder

Place armature commutator in brush holder and remove brush retainers.

[3] -

PREVIEW - YOUFIXTHIS.COM

Download full manual at youfixthis.com

Installation is done in the reverse order of removal.

IMPORTANT:

Align rocker arms over push rods during assembly.

- Install collars:
- Apply engine oil to collars (A).
- For No. 1 cylinder, insert collar into rocker arm hole with flattened side (B) facing PTO side of engine.
- Insert washers (C) onto valve clearance adjusting cap screws (D), and install from flywheel side hole of rocker arm.

→NOTE:

Align the flattened surface of the collars with the flattened surface (E) of the valve clearance adjusting cap screws (D) during installation.

- For No. 2 cylinder, insert collar into rocker arm hole with flattened side (B) facing flywheel side.
- Insert washers (C) onto the valve clearance adjusting cap screws (D), and install from PTO side hole of rocker arm.

→NOTE: Apply clean engine oil to contact surfaces of all components prior to installation.

IMPORTANT: Align rocker arms over push rods during assembly.

Adjust valve clearance. (See Check and Adjust Valve Clearance, FS730V .)

Item	Measurement	Specification
Valve Adjustment Bolt Jam Nut	Torque	11 N·m (87 lb.-in.)

- Install rocker covers and tighten rocker cover cap screws to specification.

Item	Measurement	Specification
Valve Cover Cap Screw		5.9 N·m (52 lb.-in.)

Inspect Rocker Arm and Push Rod, FS730V

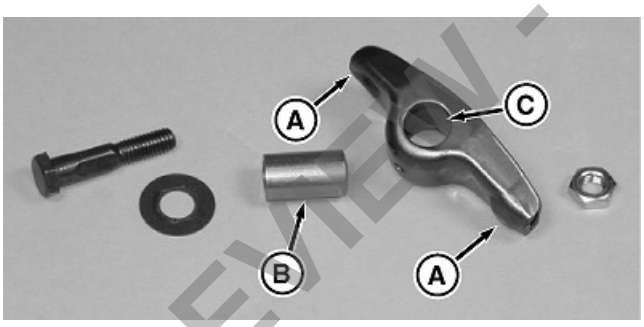

LEGEND:

A	Contact Points
B	Pivot Collar
C	Bore

Rocker arm components

[1] - Inspect all components for wear or damage. Inspect rocker arm contact points (A) for wear.

[2] - Measure outer diameter of rocker arm pivot collar (B). Replace collar if diameter measures less than specification.

Item	Measurement	Specification
Rocker Arm Pivot Collar (Inlet/Exhaust - Maximum)	OD	10.91 mm (0.4295 in.)

[3] - Measure inner diameter of rocker arm bore (C). Replace rocker arm if inside diameter is greater than specification.

Item	Measurement	Specification
Rocker Arm Bore (Inlet/Exhaust - Maximum)	ID	11.13 mm (0.4382 in.)

[4] -

PREVIEW - YOUFIXTHIS.COM

Download full manual at youfixthis.com

[5] - Remove the piston and connecting rod assembly. (See Remove and Install Piston and Connecting Rod, FS730V .)

[6] -

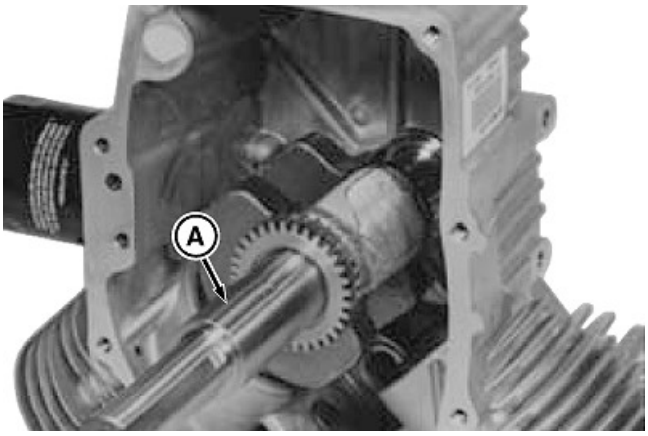

LEGEND:
A Crankshaft

Crankshaft

Remove crankshaft (A). Using a wooden or plastic mallet, gently tap the crankcase to loosen the crankshaft.

[7] - Inspect crankshaft for wear or damage. (See Inspect Crankshaft and Connecting Rod Wear, FS730V .)

Installation

Installation is done in the reverse order of removal.

- Cover keyway on flywheel end of crankshaft with tape to prevent seal damage when installing crankshaft.
- Apply a light film of clean engine oil on crankshaft bearing surfaces before installation.
- Pack oil seals with lithium based grease.

PREVIEW - YOUFIXTHIS.COM

Download full manual at youfixthis.com

[2] - Reinstall mower PTO clutch power wire to main wiring harness connector.

[3] - Rotate drive belt tensioner arm against tensioner spring force, and install drive belt to tensioner sheave. Release tensioner arm.

PREVIEW - YOUFIXTHIS.COM

Download full manual at youfixthis.com

mower belt onto center spindle sheave (H). Make sure belt is properly seated on all sheaves.

[6] - Install foot plate.

PREVIEW - YOUFIXTHIS.COM

Download full manual at youfixthis.com

	Carburetor running too lean.	Check carburetor for proper operation. (See Remove Two Barrel Carburetor , Repair Two Barrel Carburetor and Install Two Barrel Carburetor .)
		Also check for air leak at intake manifold.
	Flywheel or fan damaged; flywheel key partially sheared affecting timing.	Check flywheel, flywheel key, and fan for damage. (See Remove Flywheel and Install Flywheel .)

PREVIEW - YOUFIXTHIS.COM

Download full manual at youfixthis.com

Air Filters

→NOTE:

Late model carburetors are internally vented to meet emissions standards.

Engines with externally vented carburetors with a dirty air filter will exhibit rich running conditions. When a dirty air filter restricts air flow to the carburetor, the low pressure in the venturi drops even further, resulting in a higher pressure differential between the fuel bowl and the venturi. Therefore, a dirty air filter can enrich the air/fuel mixture to the point that performance will drop.

Engines with internally vented carburetors will not exhibit rich running conditions with a dirty air filter. When a dirty air filter restricts air flow to the throat of the carburetor, an equal reduction will be applied to the bowl vent. Internally vented carburetors maintain the pressure differential between the bowl and the venturi resulting in a consistent air/fuel mixture over the life of the air filter.

PREVIEW - YOUFIXTHIS.COM

Download full manual at youfixthis.com

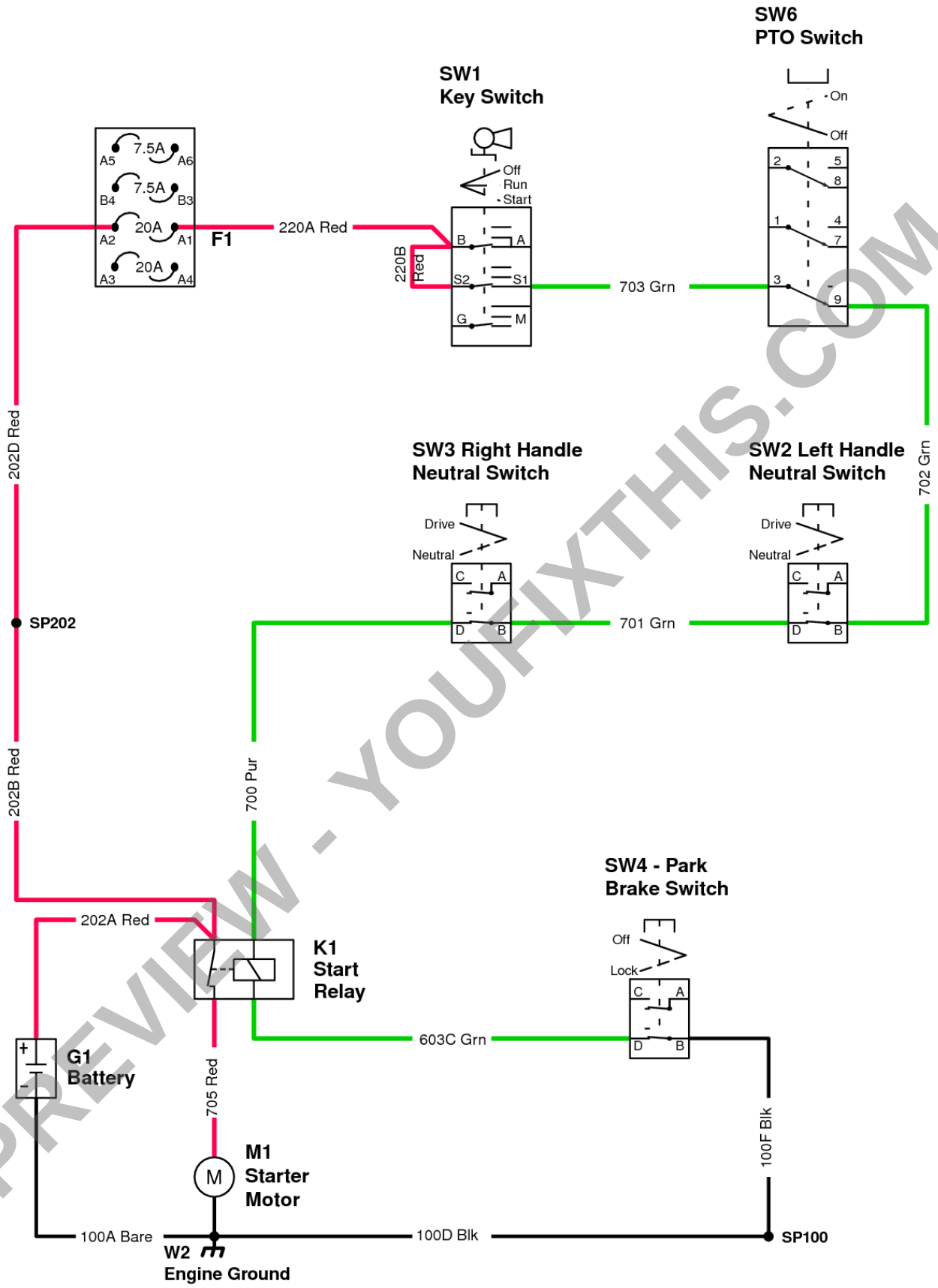

PREVIEW - YOUFIXTHIS.COM

Cranking Circuit Schematic (S.N. -120000)

Download full manual at youfixthis.com

Result:

YES: Go to next step.

NO:

OK: Test the switch. (See Park Brake and Neutral Switch Test .)

(11) Start Relay

Action:

Is battery voltage present at the start relay 700 Pur wire? (See Start Relay Connectors .)

Result:

YES: Go to next step.

NO: Check the 700 Pur wire.

(12) (continued)

Action:

Key switch OFF. Park brake set. Is there continuity between ground and the 603C Grn wire?

Result:

YES: Release park brake. If continuity still exists, check 603-series Grn wires for short to ground. Test park brake switch. (See Park Brake and Neutral Switch Test .)

NO: Go to next step.

(13) Park Brake Switch

Action:

Is continuity to ground present at the park brake switch (plunger depressed), 603C/B Grn wires? (See Park Brake Switch Connector .)

Result:

YES: Check the 603C Grn wire.

NO: Go to next step.

(14) (continued)

Action:

Is continuity to ground present at the 100F Blk wire?

Result:

YES: Test the switch. (See Park Brake and Neutral Switch Test .)

NO: Check the 100F/D Blk wires.

PREVIEW - YOUFIXTHIS.COM

Download full manual at youfixthis.com

Diagnose Charging Circuit, Z445, Z465 (S.N. 150001-)

65

Charging Circuit, Z445, Z465 (S.N. 150001-)

Refer to Charging Circuit Operation, Z445, Z465 (S.N. 150001-) for theory and circuit schematic.

Test Procedure A

(1) Battery

Action:

Test Conditions

Test Conditions:

- Machine parked safely
- Park brake locked
- Motion control handles (switches) in neutral position
- PTO switch OFF
- Battery fully charged
- Stator connected
- Power circuits functioning properly. See appropriate power circuit section.
- Key switch to RUN, running at low idle, then to high idle during test

Perform Regulated Voltage Test . Does the voltage measured across battery terminals (A) rise from approximately 12.5 VDC to 13.5~15 VDC when the throttle is moved from low idle to high idle.

Result:

YES: Charging system is working properly. Test complete.

NO: Check fusible link and wiring between battery and voltage regulator/rectifier.

NO:(Voltage >15VDC.) Replace voltage regulator/rectifier.

OK: Continue with Test Procedure B.

Test Procedure B

(1) Stator Connector

Action:

Test Conditions

Test Conditions:

- Machine parked safely
- Park brake locked
- Motion control handles (switches) in neutral position
- PTO switch OFF
- Battery fully charged
- Stator unplugged from voltage regulator/rectifier
- Power circuits functioning properly. See appropriate power circuit section.
- Key switch to RUN, running at high idle during test
- Voltmeter set to VAC

Perform Stator Output Test, Kawasaki . Is the voltage measured across stator leads a minimum 28 volts AC? (See Regulator/Rectifier Connectors .)

Result:

YES: Perform Voltage Regulator/Rectifier Test, Kawasaki . Replace regulator if charging output continues to be low.

NO: If no or low stator output is found, test flywheel stator magnets. (See Flywheel Stator Magnets Test .) If magnets are OK, then replace stator.

PREVIEW - YOUFIXTHIS.COM

Download full manual at youfixthis.com

Main Schematic, with B&S Engines (S.N. 120001-)

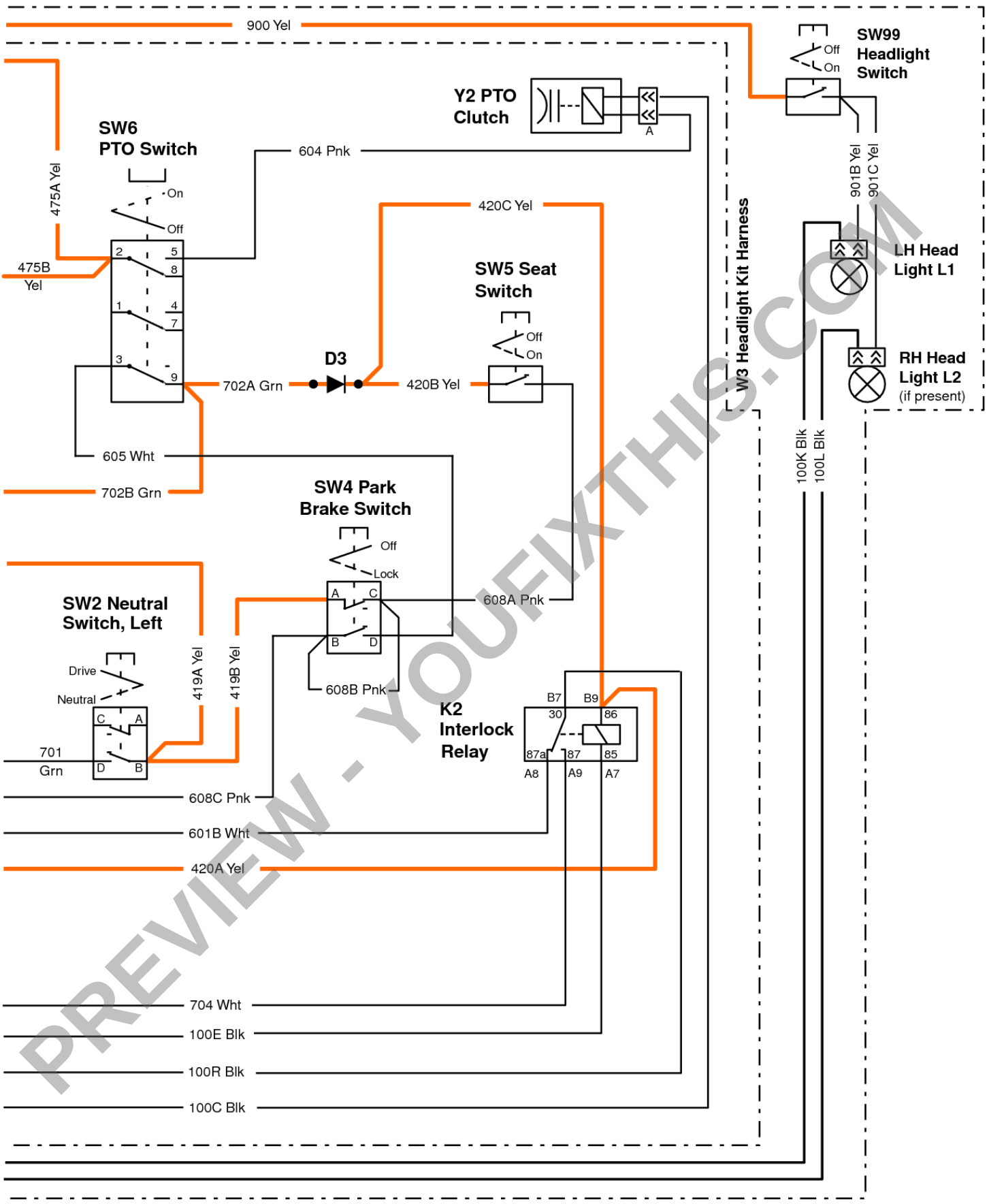

PREVIEW - YOUFIXTHIS.COM

Main Schematic, with B&S Engines (2 of 2)

Download full manual at youfixthis.com

PREVIEW ONLY

You're viewing 25 of 613 pages

The full manual includes:

- All 613 pages, complete
- Searchable PDF (find any keyword)
- No watermarks
- Instant download
- Print-ready quality

GET FULL MANUAL NOW

John Deere Z425, Z435, Z445, Z465, Z425 EZtrak Residential Mower, Z435 EZtrak Residential Mower, Z445 EZtrak Residential Mower, Z465 EZtrak Residential Mower Technical Manual

Scan or click anywhere
youfixthis.com

Click anywhere on this page to get the full manual