Z625, Z645, Z655, and Z665 EZtrak Residential Mower Diagnostic and Repair

TECHNICAL MANUAL

EZtrak Mower models Z645, Z655, Z665, Z625 (SN. 130001-)

TM113119 22 NOV 14 (ENGLISH)

PREVIEW - YOUFIXTHIS.COM

John Deere Commercial and Consumer Equipment Lawn and Garden
Pinted by Belgreen

TM113119

Download full manual at youfixthis.com

Table of contents

FOREWORD
Section 10 - GENERAL INFORMATION
Group 05 - Safety
Group 10 - General Specifications
Group 15 - Fuel and Lubricants
Group 20 - Machine Specifications
Section 20 - ENGINE REPAIR B&S
Group 10 - Repair Engine Twin Cylinder
Section 25 - ENGINE REPAIR KAWASAKI
Group 10 - Engine Repair
Group 20 - Starting Motor Repair
Section 30 - ELECTRICAL REPAIR
Group 10 - Component Location
Group 20 - Wiring Harness
Section 40 - POWER TRAIN REPAIR
Group 10 - Component Location (S.N. -130000)
Group 15 - Component Location (S.N. 130001-)
Group 20 - Repair (S.N. -130000)
Group 25 - Repair (S.N. 130001-)
Section 50 - ATTACHMENTS REPAIR
Group 10 - Component Location
Group 20 - Repair
Section 60 - MISCELLANEOUS REPAIR
Group 10 - Component Location
Group 20 - Repair
Section 220 - ENGINE DIAGNOSIS, TESTS, AND ADJUSTMENTS B&S
Group 10 - Diagnosis
Group 20 - Tests and Adjustments
Section 225 - ENGINE DIAGNOSIS, TESTS, AND ADJUSTMENTS KAWASAKI
Group 10 - Component Location
Group 20 - General Information
Group 30 - Theory of Operation
Group 40 - Diagnosis
Group 50 - Tests and Adjustments
Section 230 - ELECTRICAL DIAGNOSIS, TESTS, AND ADJUSTMENTS
Group 10 - Theory of Operation
Group 20 - Diagnosis
Group 30 - Tests and Adjustments
Group 40 - Wiring Schematics
Group 50 - Connector Information
Section 240 - POWER TRAIN DIAGNOSIS, TESTS, AND ADJUSTMENTS
Group 10 - Theory of Operation (S.N. -130000)
Group 15 - Theory of Operation (S.N. 130001-)
Group 20 - Diagnosis (S.N. -130000)
Group 25 - Diagnosis (S.N. 130001-)
Group 30 - Tests and Adjustments (S.N. -130000)
Group 35 - Tests and Adjustments (S.N. 130001-)
Section 250 - ATTACHMENTS DIAGNOSIS, TESTS, AND ADJUSTMENTS
Group 10 - Diagnosis
Group 20 - Tests and Adjustments
Section 260 - MISCELLANEOUS TESTS AND ADJUSTMENTS
Group 10 - Tests and Adjustments

PREVIEW - YOUFIXTHIS.COM

Download full manual at youfixthis.com

Group 05 - Safety

Recognize Safety Information



Safety-alert symbol

This is a safety-alert symbol. When you see this symbol on your machine or in this manual, be alert to the potential for personal injury.

Follow recommended precautions and safe operating practices.

Understand Signal Words



Signal Words

A signal word—DANGER, WARNING, or CAUTION—is used with the safety-alert symbol. DANGER identifies the most serious hazards.

DANGER or WARNING safety signs are located near specific hazards. General precautions are listed on CAUTION safety signs. CAUTION also calls attention to safety messages in this manual.

Follow Safety Instructions

PREVIEW - YOUFIXTHIS.COM

Download full manual at youfixthis.com

Group 20 - Machine Specifications

Machine Specifications (S.N. -130000)

→NOTE:

Specifications and design subject to change without notice.

General Specifications

	Z645, Z655, and Z665
Ground Speed:	
Forward	0—14.5 km/h (0—9.0 mph)
Reverse	0—5.6 km/h (0—3.5 mph)

Engine:	
Make	Briggs & Stratton
Engine Power Information	http://www.briggsandstratton.com
Type	Gas
Model	44Q977
Cylinders	v-twin
Dead Idle Speed	1300 ± 100 rpm
Low Idle Speed (Governed)	1750 ± 100 rpm
High Idle Speed	3350 ± 100 rpm
Displacement	0.724 L (44.2 $in.^3$)
Bore	79.5 mm (3.13 in.)
Stroke	73.40 mm (2.89 in.)

Lubrication	Pressurized
Crankcase Capacity	1.8 L (1.9 qt.)
Crankcase (with Filter)	1.9 L (2.0 qt.)
Cooling	Air Cooled
Air Cleaner	Paper Element
Engine Shut Off	Key Switch

Fuel System:	
Type	Mechanical Vacuum Pump
Tank Capacity	13.2 L (3.5 gal.)

Electrical System:	
Type	12 Volt Negative Ground
Stator Output	6—16.6 amp regulated at 12.2—13.8 VDC
Battery	12-volt
Battery Type	BCI Group U1
Spark Plug Torque	20 N·m (180 lb.-in.)
Spark Plug Gap	0.76 mm (0.030 in.)
Ignition Coil Air Gap	0.20—0.30 mm (0.008—0.012 in.)

Power Train:	
Transaxle	Kanzaki DUP-10
Wheel Motors	Parker TE0195
Transaxle Type	Hydrostatic
Drive	Hydraulic Wheel Motors
Hydraulic System Oil Capacity (Includes Reservoir)	6.1 L(1.65 gal.)

PREVIEW - YOUFIXTHIS.COM

Download full manual at youfixthis.com

Repair Two Barrel Carburetor

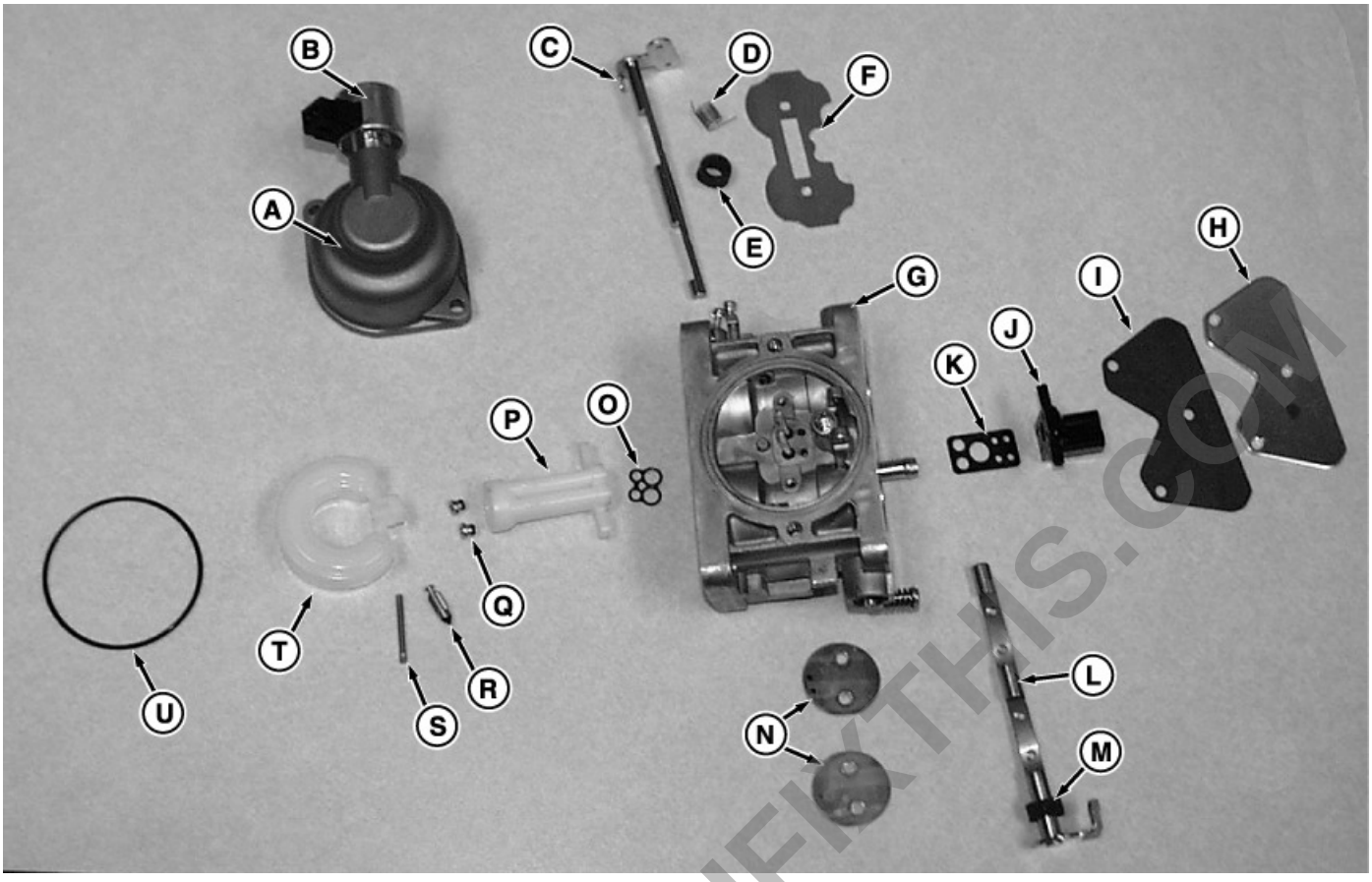

Component Location

LEGEND:

A	Fuel Bowl
B	Fuel Shutoff Solenoid
C	Choke Shaft
D	Choke Return Spring
E	Foam Seal
F	Choke Valve
G	Carburetor Body
H	Top Plate
I	Gasket
J	Discharge Nozzle
K	Gasket
L	Throttle Shaft
M	Seal
N	Throttle Valve Plates
O	Emulsion Tube Gasket
P	Emulsion Tube Body
Q	Main Jets
R	Inlet Valve
S	Float Pin
T	Float
U	Float Bowl O-Ring

Components

Disassemble

PREVIEW - YOUFIXTHIS.COM

Download full manual at youfixthis.com

Metric Bolt and Screw Torque Values

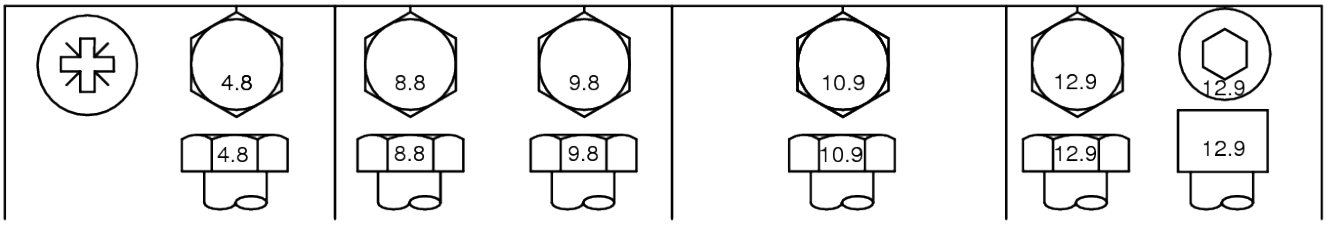

Metric Bolt and Screw

Metric Torque Values

Bolt or Screw Size	Class 4.8				Class 8.8 or 9.8				Class 10.9				Class 12.9			
	Lubricated ["Lubricated" means coated with a lubricant such as engine oil, fasteners with phosphate and oil coatings, or M20 and larger fasteners with JDM F13C, F13F or F13J zinc flake coating.]		**Dry** ["Dry" means plain or zinc plated without any lubrication, or M6 to M18 fasteners with JDM F13B, F13E or F13H zinc flake coating.]		**Lubricated** ["Lubricated" means coated with a lubricant such as engine oil, fasteners with phosphate and oil coatings, or M20 and larger fasteners with JDM F13C, F13F or F13J zinc flake coating.]		**Dry** ["Dry" means plain or zinc plated without any lubrication, or M6 to M18 fasteners with JDM F13B, F13E or F13H zinc flake coating.]		**Lubricated** ["Lubricated" means coated with a lubricant such as engine oil, fasteners with phosphate and oil coatings, or M20 and larger fasteners with JDM F13C, F13F or F13J zinc flake coating.]		**Dry** ["Dry" means plain or zinc plated without any lubrication, or M6 to M18 fasteners with JDM F13B, F13E or F13H zinc flake coating.]		**Lubricated** ["Lubricated" means coated with a lubricant such as engine oil, fasteners with phosphate and oil coatings, or M20 and larger fasteners with JDM F13C, F13F or F13J zinc flake coating.]		**Dry** ["Dry" means plain or zinc plated without any lubrication, or M6 to M18 fasteners with JDM F13B, F13E or F13H zinc flake coating.]	
	N˙m	**lb.-in.**	**N˙m**	**lb.-in.**	**N˙m**	**lb.-in.**	**N˙m**	**lb.-in.**	**N˙m**	**lb.-in.**	**N˙m**	**lb.-in.**	**N˙m**	**lb.-in.**	**N˙m**	**lb.-in.**
M6	4.7	42	6	53	8.9	79	11.3	100	13	115	16.5	146	15.5	137	19.5	172
									N˙m	**lb.-ft.**	**N˙m**	**lb.-ft.**	**N˙m**	**lb.-ft.**	**N˙m**	**lb.-ft.**
M8	11.5	102	14.5	128	22	194	27.5	243	32	23.5	40	29.5	37	27.5	47	35
			N˙m	**lb.-ft.**	**N˙m**	**lb.-ft.**	**N˙m**	**lb.-ft.**								
M10	23	204	29	21	43	32	55	40	63	46	80	59	75	55	95	70
	N˙m	**lb.-ft.**														
M12	40	29.5	50	37	75	55	95	70	110	80	140	105	130	95	165	120
M14	63	46	80	59	120	88	150	110	175	130	220	165	205	150	260	190
M16	100	74	125	92	190	140	240	175	275	200	350	255	320	235	400	300
M18	135	100	170	125	265	195	330	245	375	275	475	350	440	325	560	410
M20	190	140	245	180	375	275	475	350	530	390	675	500	625	460	790	580
M22	265	195	330	245	510	375	650	480	725	535	920	680	850	625	1080	800
M24	330	245	425	315	650	480	820	600	920	680	1150	850	1080	800	1350	1000
M27	490	360	625	460	950	700	1200	885	1350	1000	1700	1250	1580	1160	2000	1475
M30	660	490	850	625	1290	950	1630	1200	1850	1350	2300	1700	2140	1580	2700	2000
M33	900	665	1150	850	1750	1300	2200	1625	2500	1850	3150	2325	2900	2150	3700	2730
M36	1150	850	1450	1075	2250	1650	2850	2100	3200	2350	4050	3000	3750	2770	4750	3500

Torque values listed are for general use only, based on the strength of the bolt or screw. DO NOT use these values if a different torque value or tightening procedure is given for a specific application. For stainless steel fasteners or for nuts on U-bolts, see the tightening instructions for the specific application. Tighten plastic insert or crimped steel type lock nuts by turning the nut to the dry torque shown in the chart, unless different instructions are given for the specific application.

Shear bolts are designed to fail under predetermined loads. Always replace shear bolts with identical property class. Replace fasteners with the same or higher property class. If higher property class fasteners are used, tighten these to the strength of the original. Make sure fastener threads are clean and that you properly start thread engagement. When possible, lubricate plain or zinc plated fasteners other than lock nuts, wheel bolts or wheel nuts, unless different instructions are given for the specific application.

PREVIEW - YOUFIXTHIS.COM

Download full manual at youfixthis.com

Carburetor Cleaning

Debris, corrosion, rust, or varnish can build up in the internal air/fuel passages. Many times the contamination is located in an area of the carburetor that is not visible. In most cases proper cleaning can resolve these issues.

Carburetors and carburetor components can be cleaned by using one of several types of commercial cleaning methods: aerosol sprays, caustic dip tanks, and ultrasonic cleaners.

→NOTE:

Some cleaning chemicals may be flammable and have toxic fumes. Always follow the chemical manufacturer's recommendations. Always wear personal protection gear such as safety glasses protective gloves and work in a well ventilated area. Do not use drill or hard wire to clean carburetor passage ways.

Cleaning Procedure

Always follow the solvent manufacturer's recommendations for material compatibility because some solvents may attack metal, plastic or rubber components.

[1] - Clean debris off the outside of the carburetor before disassembly.

[2] - Completely disassemble the carburetor per the instructions in the Technical Manual and visually inspect.

[3] - Determine if carburetor is repairable, excessive corrosion may determine this is not practical.

[4] - If repairable, clean any remaining dirt and old gaskets from the carburetor.

The preferred method of cleaning is to use an ultrasonic cleaner.

IMPORTANT:

Wires and metal instruments should not be used. Light damage or deposits on the surface of the float valve seat can be removed using a cotton swab with a mild abrasive such as toothpaste or 800 grit lapping compound.

Carburetor Assembly

When the carburetor is ready for assembly, lay out all the necessary components on a clean surface. Be aware that even clean shop rags may contain dirt and metal shavings. Assemble the carburetor in accordance with the instructions in the Technical Manual. Keep the following in mind:

- Check the throttle shaft for excessive play or movement and any signs of binding.
- Never use oil on the throttle shaft because it attracts dirt which can cause premature wear of the throttle shaft seals.
- If the throttle shaft was removed use new screws and follow the service manual torque specifications.
- Always check the float and float valve for binding with the float valve installed in its proper position.
- Replacement of all gaskets and seals is necessary when servicing any carburetor.
- Inspect the carburetor insulator for damage and replace if necessary. Be sure to install the insulator using the correct orientation.
- Clean and flush the complete fuel system.
- Fuel lines must be replaced if they are brittle, cracked, excessively soft or damaged.
- Replace the fuel filter and air filter after cleaning the carburetor.

PREVIEW - YOUFIXTHIS.COM

Download full manual at youfixthis.com

B&S V-Twin, Engine Cranks But Will Not Start

66

Engine Cranks But Will Not Start (V-Twin)

Symptom	Problem	Solution
Engine Cranks But Will Not Start	Engine cranks slowly.	Charge and test battery. (See Battery Charge , and Battery Load Test .)
		Replace the battery if it will not hold a charge.
		Starting motor is binding. (See Starting Motor Amperage Draw Test: Loaded, B&S .)
	Poor or no spark at spark plug.	Replace spark plug.
		Ignition air gap incorrect. (See Adjust Armature Air Gap, V-Twin .)
		Magneto shorted to ground, flywheel magnet weak.
	Choke or throttle not adjusted properly.	Adjust cable. (See Adjust Throttle and Choke Cable, V-Twin .)
	Fuel supply.	Check air cleaner, fuel mixture, possible contaminated fuel, or stuck float needle.
		Dirty carburetor. (See Carburetor Cleaning .)
		Check fuel shutoff valve, fuel lines, fuel pump, and engine vacuum.
	Fuel shutoff solenoid does not open when ignition switch is turned to start/run.	Check fuel solenoid and ignition circuit. (See Fuel Shutoff Solenoid Test, B&S , and Ignition Interlock Circuit Operation (S.N. -120000) or Interlock Circuit Operation (S.N. 120001-150000) .)
	Valve clearance improper.	Check and adjust valve clearance. (See Adjust Valve Clearance, V-Twin .)
	Internal components binding.	Remove spark plug and drive belts. Turn the engine over by hand. If the engine is hard to turn over by hand repair or replace engine.

PREVIEW - YOUFIXTHIS.COM

Download full manual at youfixthis.com

Group 40 - Wiring Schematics

Summary of References

- Schematic Legend
- Main Electrical Schematic (S.N. -120000)
- Main Electrical Schematic (S.N. 120001-150000)
- Main Electrical Schematic (S.N. 150001-)

Schematic Legend

Components:

DEFINITIONS:

D1, D2	Diode
D3	Diode (S.N. 120001-)
E1, E2	Spark Plug
F1	Fuse 20A
F2	Fuse 20A
F3	Fuse 7.5A
F4	Fuse 7.5A (option)
G1	Battery
G2	Stator
K1	Start Relay
K2	Interlock Relay
K3	PTO Relay (S.N. 120001-150000)
L1	Left Headlight (option)
L2	Right Headlight (option)
M1	Starting Motor
N1	Voltage Regulator/Rectifier
P1	Hourmeter
SW1	Key Switch
SW2	Left Handle Neutral Lock Switch
SW3	Right Handle Neutral Lock Switch
SW4	Park Brake Switch
SW5	Seat Switch
SW6	PTO Switch
SW99	Headlight Switch (option)
T1, T2	Ignition Coil
W2	Engine Ground
Y1	Fuel Shutoff Solenoid
Y2	PTO Clutch
Y3	Starting Motor Solenoid (S.N. 150001-)

Connectors:

DEFINITIONS:

C4E	W2 Engine Wiring Harness to W1 Main Wiring Harness
C4M	W1 Main Wiring Harness to W2 Engine Wiring Harness

Wiring Harnesses:

DEFINITIONS:

W1	Main Wiring Harness
W2	Engine Wiring Harness
W3	Headlight Wiring Harness (option)

PREVIEW - YOUFIXTHIS.COM

Download full manual at youfixthis.com

Hydraulic Schematic (S.N. -130000)

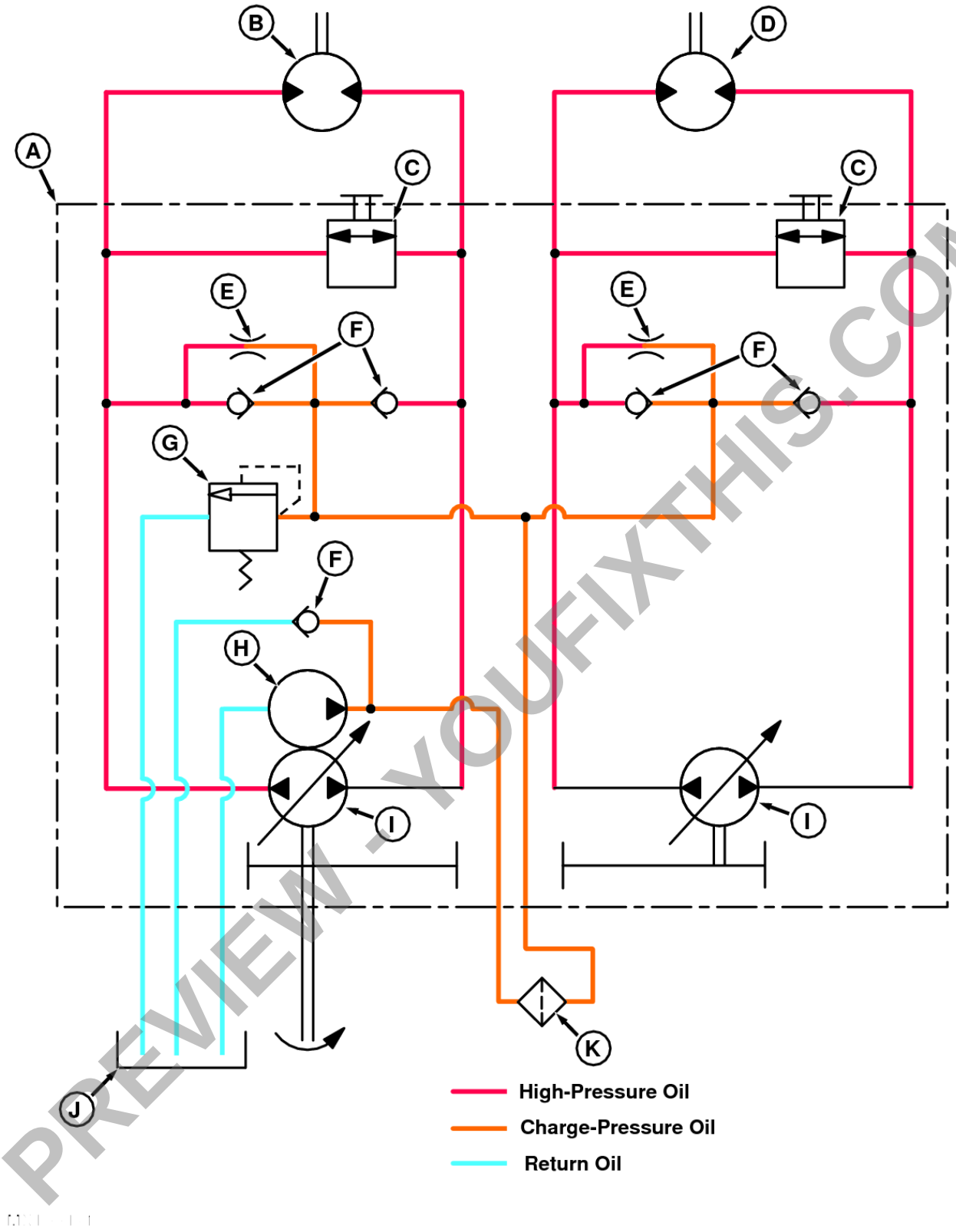

PREVIEW - YOUFIXTHIS.COM

Hydraulic Schematic

LEGEND:

A	Hydraulic Pump/Control Assembly
B	Right Wheel Motor
C	Bypass
D	Left Wheel Motor
E	Orifice
F	Check Valve
G	Pressure Releif Valve

Download full manual at youfixthis.com

PREVIEW - YOUFIXTHIS.COM

Download full manual at youfixthis.com

Specifications

Item	Measurement	Specification
Blower Housing Screw	Torque	9 N·m (80 lb.-in.)
Carburetor to Intake Manifold Studs	Torque	7 N·m (65 lb.-in.)
Air Cleaner Elbow to Carburetor	Torque	7 N·m (65 lb.-in.)
Intake Manifold Cap Screws	Torque	9 N·m (80 lb.-in.)
Fuel Shutoff Solenoid	Torque	5 N·m (45 lb.-in.)
PTO Clutch Bolt	Torque	68 N·m (50 lb.-ft.)
Muffler Flange Bolt	Torque	24 N·m (18 lb.-ft.)
Muffler Mounting Bolt	Torque	7 N·m (65 lb.-in.)
Muffler Heat Shield Bolt	Torque	7 N·m (65 lb.-in.)
Engine Oil With Filter	Capacity	1.9 L (2.0 qt.)
Air Guide Screws	Torque	7 N•m (62 lb.-in.)
Cylinder Head Bolt Increments	Torque	9 N·m (80 lb.-in.)
Cylinder Head Bolt Final	Torque	25 N·m (220 lb.-in.)
Rocker Arm Screws	Torque	11 N·m (100 lb.-in.)
Valve Cover Screws	Torque	11 N·m (100 lb.-in.)
Spark Plug	Torque	20 N·m (180 lb.-in.)
Cylinder Head (maximum)	Out-of-Flat	0.1 mm (0.004 in.)
Valve Guide (maximum)	ID	6.09 mm (0.240 in.)
Valve Specifications:		
Valve Guide Wear Limits	ID	6.10 mm (0.240 in.)
Valve Stem Wear Limits Intake	OD	5.92 mm (0.233 in.)
Valve Stem Wear Limits Exhaust	OD	5.92 mm (0.233 in.)
Valve Seat Width	Width	1.2—1.6 mm (0.047—0.063 in.)
Valve Margin (minimum)	Width	0.4 mm (0.016 in.)
Valve Guide Depth	Distance	7.10 mm (0.280 in.)
Valve Face Angle	Angle	45°

PREVIEW - YOUFIXTHIS.COM

Download full manual at youfixthis.com

Remove Piston, Rings and Rod

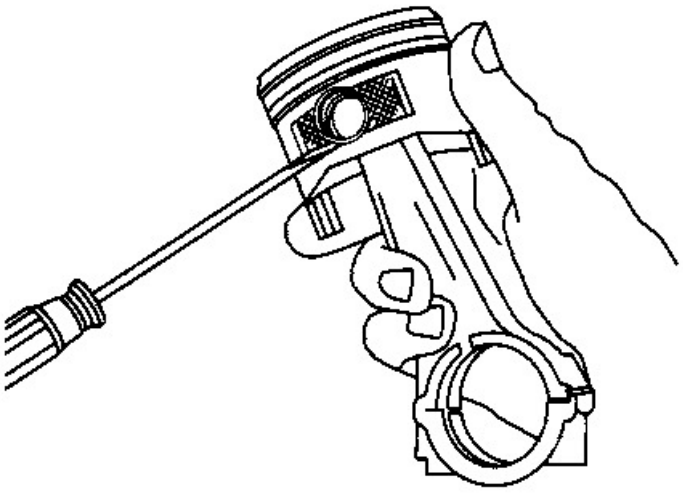

Remove Piston from Rod

[1] - Remove air filter and bracket, upper blower housing, flywheel, alternator, carburetor, intake manifold and governor linkage.

[2] - Remove starting motor, cylinder heads and crankcase cover.

[3] -

→NOTE:

Remove any carbon or ridge at the top of the cylinder bore. This will prevent breaking the rings when removing the piston and connecting rod from the engine.

Remove the connecting rod cap. Then push the piston and connecting rod out through the top of the cylinder.

[4] - To remove connecting rod from piston, remove piston pin locks with screwdriver. Piston pin is a push fit in piston and rod. Deposits may build up on piston pin and require the piston pin to be pressed out.

[5] -

IMPORTANT:

Avoid Damage! Remove top and center compression rings using ring expander (A). New piston rings must be installed whenever the engine is disassembled for major servicing or overhaul, providing that cylinder bores are within specifications.

→NOTE:

Measure cylinder bores before checking pistons and rings. If cylinder bores require re-sizing it will not be necessary to check pistons and rings since a new oversized piston assembly must be used.

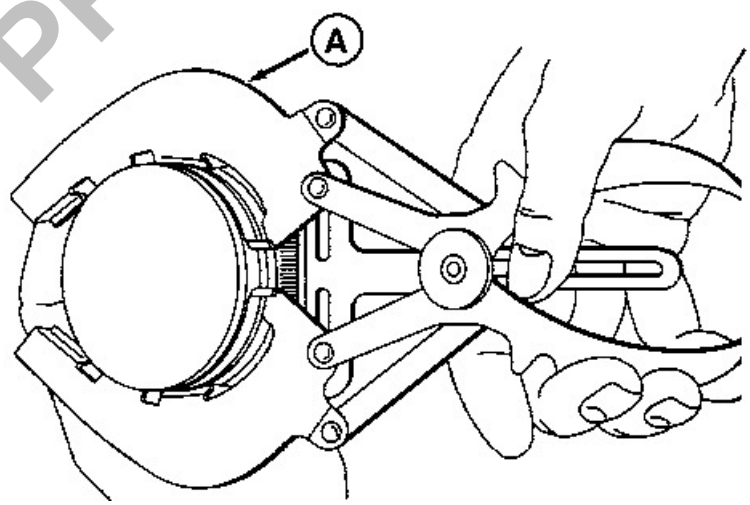

PREVIEW - YOUFIXTHIS.COM

Download full manual at youfixthis.com

Specifications

Item	Measurement	Specification
Fuel Pump Mounting Screw	Torque	5.9 N·m (52 lb.-in.)
Muffler Nut	Torque	15 N·m (11 lb.-ft.)
Engine Mounting Bolts	Torque	63 N·m (46 lb.-ft.)
PTO Clutch Bolt	Torque	68 N·m (50 lb.-ft.)
Engine Oil with Filter	Capacity	2.1 L (2.2 qt.)
Carburetor Install		
Throttle Control Plate Cap Screw	Torque	5.9 N•m (52 lb.-in.)
Carburetor Nuts	Torque	5.9 N·m (52 lb.-in.)
Carburetor		
Choke Valve Screws		0.7 N·m (6 lb.-in.)
Throttle Valve Screws		1.0 N·m (9 lb.-in.)
Pilot Jet		1.7 N·m (15 lb.-in.)
Main Jet		0.7 N·m (6 lb.-in.)
Valve Seat		2.0 N·m (17 lb.-in.)
Main Nozzle		2.0 N·m (17 lb.-in.)
Main Air Jet		0.7 N·m (6 lb.-in.)
Pilot Air Jet		0.7 N·m (6 lb.-in.)
Drain Screw		1.3 N·m (11 lb.-in.)
Fuel Shutoff Solenoid		4.5 N·m (40 lb.-in.)
Intake Manifold Cap Screws	Torque	5.9 N·m (52 lb.-in.)
Breather Chamber Cover Cap Screw	Torque	5.9 N·m (52 lb.-in.)
Fan Screen Screws	Torque	5.9 N·m (52 lb.-in.)
Blower Housing Bolts	Torque	5.9 N·m (52 lb.-in.)
Ignition Coil		
Ignition Coil	Air Gap	0.20–0.40 mm (0.008–0.016 in.)
Ignition Coil Cap Screw (Stud Bolt)	Torque	7.8 N·m (69 lb.-in.)
Ignition Coil Cap Screw (Flange Bolt)	Torque	5.9 N·m

PREVIEW - YOUFIXTHIS.COM

Download full manual at youfixthis.com

Remove and Install Crankcase Cover, FS730V

Remove:

[1] - Remove engine. (See Remove Engine, FS730V .)

[2] - Remove air cleaner assembly.

[3] - Remove carburetor and throttle control plate assembly. (See Remove and Install Carburetor, FS730V)

[4] - Remove intake manifold. (See Remove and Install Intake Manifold, FS730V .)

[5] - Remove governor lever arm.

[6] - Drain crankcase. Capacity (with filter) is within specification.

Item	Measurement	Specification
Engine Oil (Approx.)	Capacity	2.1 L (2.2 qt.)

[7] -

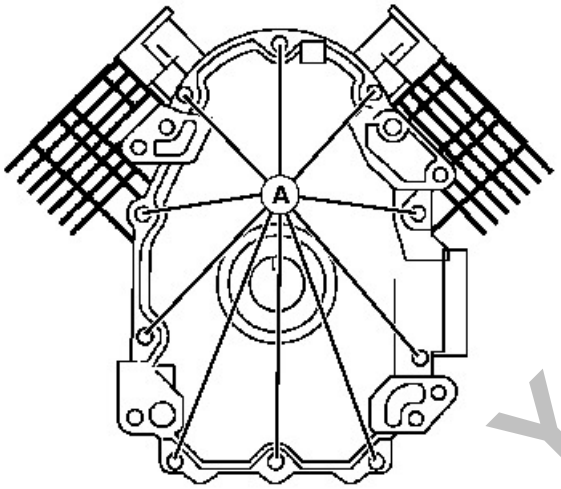

LEGEND:
A Cap Screws

Cap Screws

Loosen and remove the cap screws (A) securing the crankcase cover to the crankcase.

[8] - Remove crankcase cover.

[9] - Clean crankcase and crankcase cover gasket surfaces.

Install:

[1] -

IMPORTANT:

When installing crankcase cover cap screws, DO NOT tighten one cap screw completely before the others or it may cause the crankcase to warp. Turn all cap screws in to a snug position in a uniform manner.

→NOTE:

Do not force cover. Gears must mesh for proper positioning.

PREVIEW - YOUFIXTHIS.COM

Download full manual at youfixthis.com

Group 10 - Component Location

Electrical Component Location

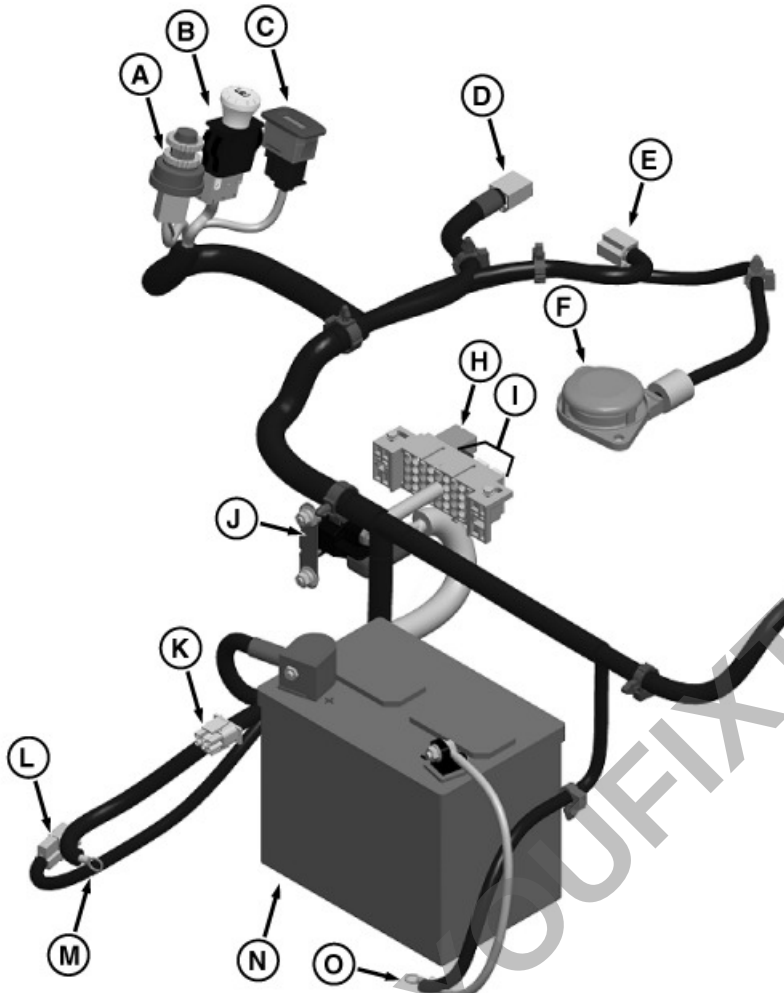

Electrical Component Location

LEGEND:

A	SW1 Key Switch
B	SW6 PTO Switch
C	P1 Hourmeter
D	SW4 Park Brake Switch
E	SW3 Left Handle Neutral Lock Switch
F	SW5 Seat Switch
G	SW2 Right Handle Neutral Lock Switch
H	K2 Interlock Relay and [K3 PTO Relay (S.N. 120001-150000)] or [K1 Start Relay (S.N. 150001-)]
I	Fuses and [D3 Diode (S.N. 120001-)]
J	K1 Start Relay (S.N. -150000)
K	C4M Connector to Engine Wiring Harness
L	Connector to Y2 PTO Clutch
M	M1 Starting Motor
N	G1 Battery
O	W2 Engine Ground

PREVIEW - YOUFIXTHIS.COM

Download full manual at youfixthis.com

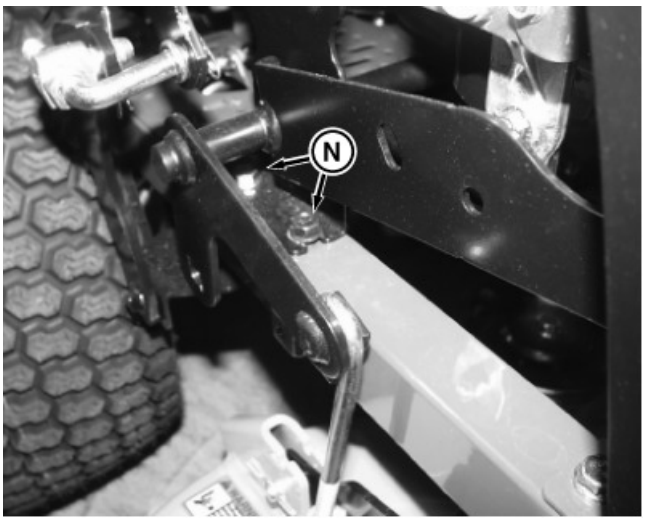

LEGEND:
N Screws

Lift Frame Screws

Install four screws (N) securing lift frame to machine.

[17] -

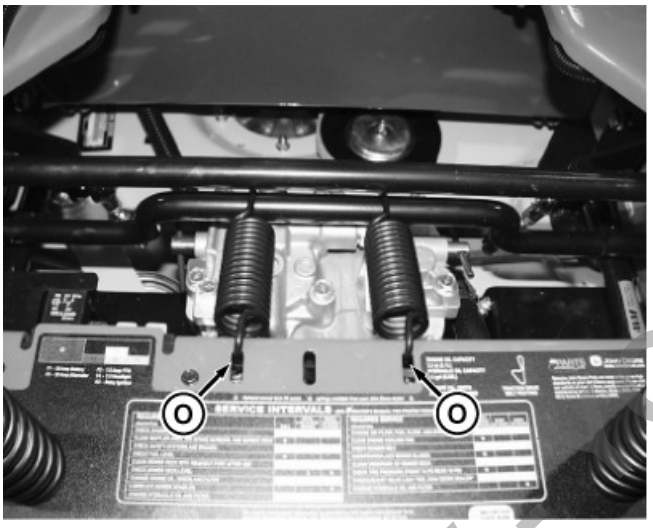

LEGEND:
O Springs

Lift Springs

Connect lift springs (O).

[18] -

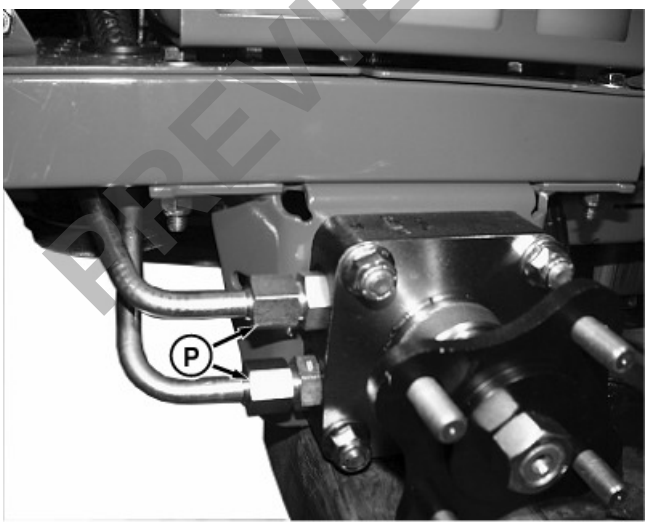

LEGEND:
P Lines

Wheel Motor Lines

Connect and tighten lines (P) at wheel motors (if removed) to specification.

Item	Measurement	Specification
Wheel Motor Hydraulic Line	Torque	31 N·m

PREVIEW - YOUFIXTHIS.COM

Download full manual at youfixthis.com

Deck Shields—48HC Deck

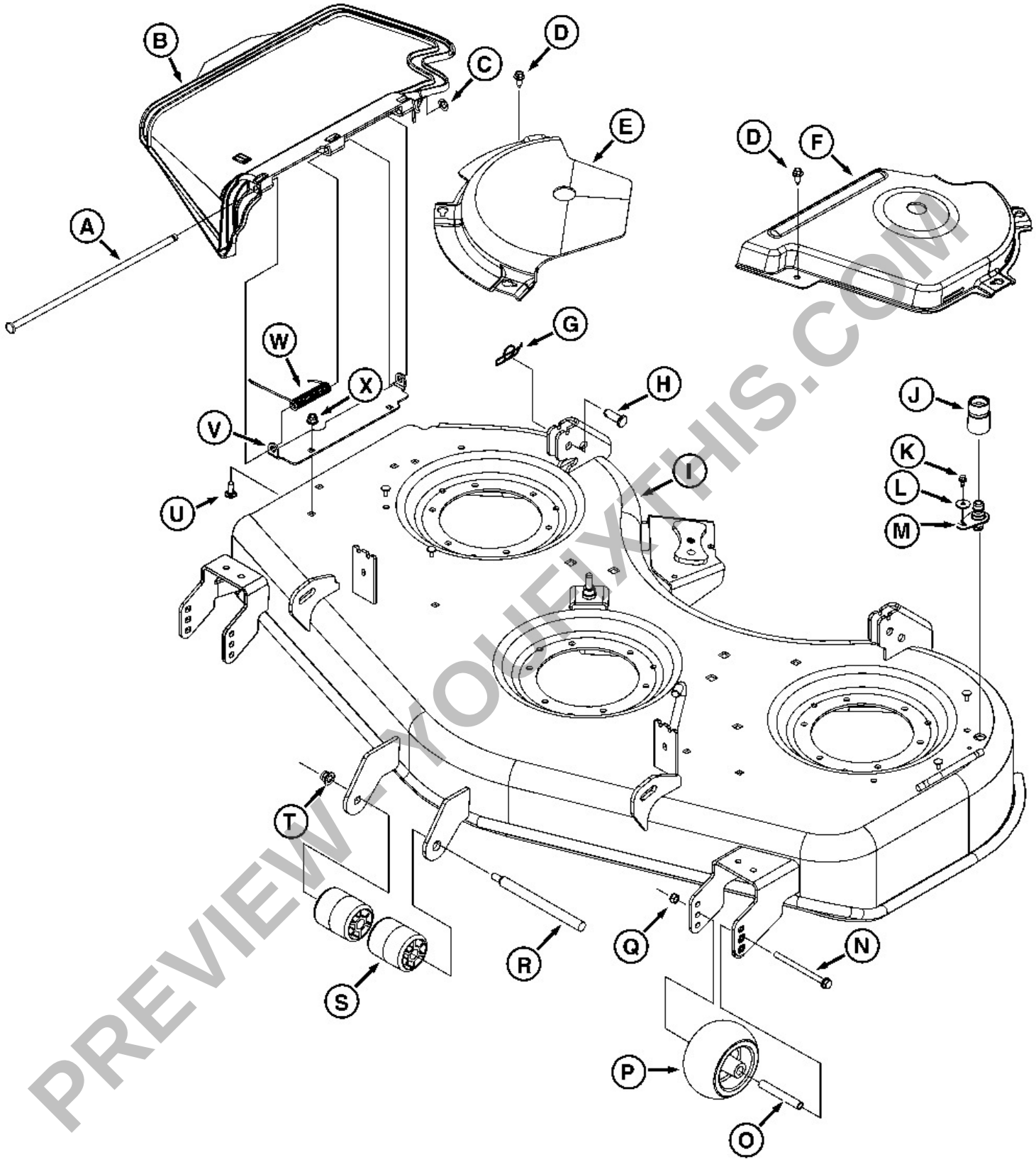

PREVIEW-YOUFIXTHIS.COM

Deck Shields 48HC

LEGEND:

A	Pin
B	Chute
C	Push Nut
D	Screw
E	Shield
F	Shield
G	Cotter Pin
H	Pin

Download full manual at youfixthis.com

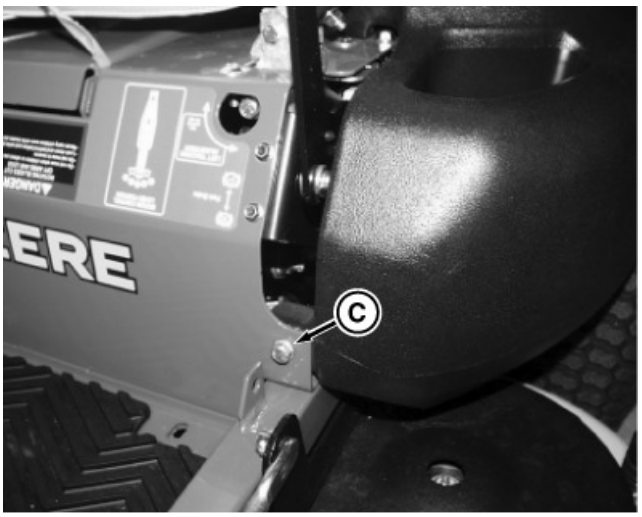

LEGEND:

C	Nut

Hardware

Remove bolt and nut (C).

[6] - Remove control console assembly and move to the side of the machine.

[7] - If the console is to be completely removed, disconnect cables and wiring at console.

Installation:

Installation is the reverse of removal.

Remove and Install Seat

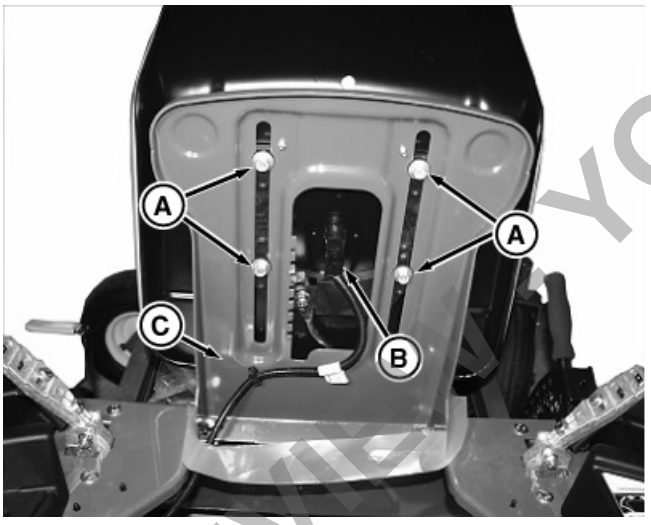

LEGEND:

A	Bolt
B	Seat Switch
C	Platform Assembly

Platform Assembly

Remove

[1] - Park machine safely.

[2] - Adjust seat to the fully rearward position.

[3] - Raise seat platform assembly (C).

[4] - Disconnect connector at seat switch (B).

[5] - Remove four bolts (A) retaining seat base onto platform.

[6] - Remove seat.

Install

PREVIEW YOUFIXTHIS.COM

Download full manual at youfixthis.com

Fuel

Use only fuels recommended in Operator's Manual:

Use regular grade unleaded fuel with an octane rating of 87 octane or higher. Fuel blends containing up to 10% ethanol or up to 15% MTBE reformulated fuel are acceptable. DO NOT use fuels with more than 10% ethanol (i.e. E85 should not be used because it is 85% ethanol and 15% gasoline) or fuels with more than 15% MTBE reformulated fuel as these products will damage engine and or fuel system. Do not use fuel or additives containing methanol as engine damage can occur.

All fuel today is formulated for the automotive industry. Fuel is "blended" differently for winter and summer use; regardless of where you are. "Winter" fuel is blended for improved vaporization in colder temperatures. Using left over "Winter" fuel in warmer Spring/Summer temperatures will likely cause vapor locking and surging. Newer carburetors on current production machines have less tolerance for poor quality fuel because of the tighter specifications required to meet EPA certification.

Fuel Storage

Since it is difficult to know what type of fuel is in different areas; it is best to handle and maintain fuel as outlined below:

[1] - Deteriorated/stale fuel causes gum and varnish. This creates deposits on engine valves and in carburetor jets and passages. This is what causes most of the performance problems.

[2] - Oxygenated (or blended) fuels can deteriorate faster and require more specific storage and usage procedures.

[3] -

CAUTION:

Fuel stabilizer is a hazardous chemical and can be harmful or fatal if swallowed. Do not take internally. Avoid contact with eyes. Avoid breathing the chemical vapors.

Read safety instructions on stabilizer container label before using.

Fuel stabilizer contains 2,6-di-tert-butylphenol (128-39-2) and aliphatic petroleum distillate (64742-47-8). In case of emergency, contact a physician immediately and call 1-800-424-9300 for material safety information.

The translucent fuel tanks on some model tractors allow a certain amount of sunlight through the tank. This can accelerate the deterioration of the fuel.

[4] -

→NOTE:

There is no fuel stabilizer made that will "restore" stale fuel. Fill tanks with fresh, stabilized fuel.

Use fuel from a major name brand supplier. At the same time, add an appropriate amount of Fuel Stabilizer (such as TY25808). Do this when you add fresh fuel to your tank.

[5] - If engine performance problems arise, try another brand of fuel. You may have to try several different sources.

[6] - Any fuel over 30 days old is considered "stale".

- For 2-cycle equipment, purchase as small a quantity of fuel as feasible. If there is doubt about how long the fuel may be stored, add stabilizer right away. JOHN DEERE PREMIUM EXACT MIX 2-Cycle Oil (UP08127) already has a fuel stabilizer added to the oil. When using this oil fuel mix, it will stay fresh for up to 30 days. If storing a 2-cycle powered unit for more than 3 weeks, it is recommended to run the fuel out of the unit.

PREVIEW - YOUFIXTHIS.COM

Download full manual at youfixthis.com

Test Engine Oil Pressure, FS730V

Reason:

To verify if the engine has enough oil pressure to lubricate internal components.

Test Equipment:

- JT03344 Pressure Gauge Assembly
  Pressure Gauge Assembly
  JT03344
  Used to test Pressure
- JT03017 Hose Assembly
  Hose Assembly
  JT03017
  Used to connect the pressure gauge assembly.
- JT03349 Connector
  Connector
  JT03349
  Used to connect the pressure gauge assembly.

Procedure:

[1] - Park machine safely.

[2] -

CAUTION:

Engine components are HOT. Be careful not to touch, especially the exhaust pipe or muffler while making adjustments. Wear protective eye glasses and clothing.

Turn key switch OFF. Allow engine to cool.

[3] - Check engine oil level. Bring level to full mark.

[4] -



LEGEND:
A Oil Plug

Oil Plug

Remove oil plug (A).

[5] - Install JT03349 Connector.

[6] - Connect JT03017 hose assembly and JT03344 pressure gauge assembly.

[7] - Monitor oil pressure while cranking engine. If no oil pressure is present, discontinue cranking engine. Determine and

PREVIEW - YOUFIXTHIS.COM

Download full manual at youfixthis.com

Interlock Circuit Operation (S.N. 150001-)

Function:

To shut off the engine should the machine be placed in an unsafe operating mode.

Operating Conditions:

The engine will stop when:

- Key switch is in OFF position;

- OR -

- Park brake unlocked, and
- Operator off seat;

- OR -

- Park brake locked, and
- Motion control handles in DRIVE position (whether machine is in motion or not) ;

- OR -

- PTO engaged, and
- Operator off seat.

Theory of Operation:

The ignition system is a transistor-controlled magneto design. Ignition timing is governed by the transistor and is not adjustable. As the engine turns over, the flywheel magnet induces current into the magneto ignition coil. The coil creates the high voltage needed to jump the spark plug gap, igniting the fuel/air mixture in the cylinder.

The engine is shut off by grounding the primary winding of the ignition coils. With the ignition coils grounded, a spark cannot be produced.

There are two controlled paths to ground the ignition coils: the key switch and the K2 interlock relay.

Key Switch:

With the key switch in the OFF position, the switch creates a ground path from the 100G Blk wire to the 601-series Wht wires and the ignition coilsl.

Interlock Relay:

The K2 interlock relay must be energized so as not to ground out the ignition primary windings. The 601-series Wht and 100-series Blk wires connect the interlock relay contacts to the ignition circuit.

Control of the relay is handled by the following component and circuit combinations:

- With the park brake unlocked (brake switch contacts A-C closed) and the operator on seat (seat switch contacts closed), power is provided to the interlock relay coil, keeping the relay contacts open.
- When the park brake is locked (brake switch contacts B-D closed), both neutral switches must be closed (motion control handles spread apart). In addition, either the PTO switch must be in the OFF position or the operator must be on the seat. The D3 diode prevents the start relay from being energized if the park brake switch is in the unlocked position and the operator is on the seat.

PREVIEW - YOUFIXTHIS.COM

Download full manual at youfixthis.com

Action:

Test Conditions

Test Conditions:

- Key switch in RUN position, engine not running
- Park brake locked

Is battery voltage present at the F3 fuse and F4 fuse? (See Load Center (S.N. 150001-) .)

Result:

YES: Go to next step.

NO: Test the key switch and replace as necessary. (See Key Switch Test .)

(2) PTO Switch

Action:

Is battery voltage present at PTO switch terminal 2, 475A/B Yel wires? (See PTO Switch Connector .)

Result:

YES: Go to next step.

NO: Test fuse F3. Check Yel wires 400A/B, 475A.

(3) Hourmeter Connector

Action:

Disconnect the harness from the hour meter. Is battery voltage present at connector 475B Yel wire? (See Hour Meter Connector .)

Result:

YES: Reconnect the hour meter. Go to next step.

NO: Check the 475B Yel wire and connections.

(4) Left Neutral Switch

Action:

Is battery voltage present at the left neutral switch 419A/B Yel wires? (See Left Handle Neutral Switch Connector .)

Result:

YES: Go to next step.

NO: Check 419A Yel wire. Confirm hourmeter has continuity between terminals (A) and (D).

(5) Park Brake Switch

Action:

Is battery voltage present at the park brake switch 419B Yel wire? (See Park Brake Switch Connector .)

Result:

YES: Go to next step.

NO: Check 419B Yel wire.

(6) Light Switch (option)

PREVIEW - YOUFIXTHIS.COM

Download full manual at youfixthis.com

Start Relay Test

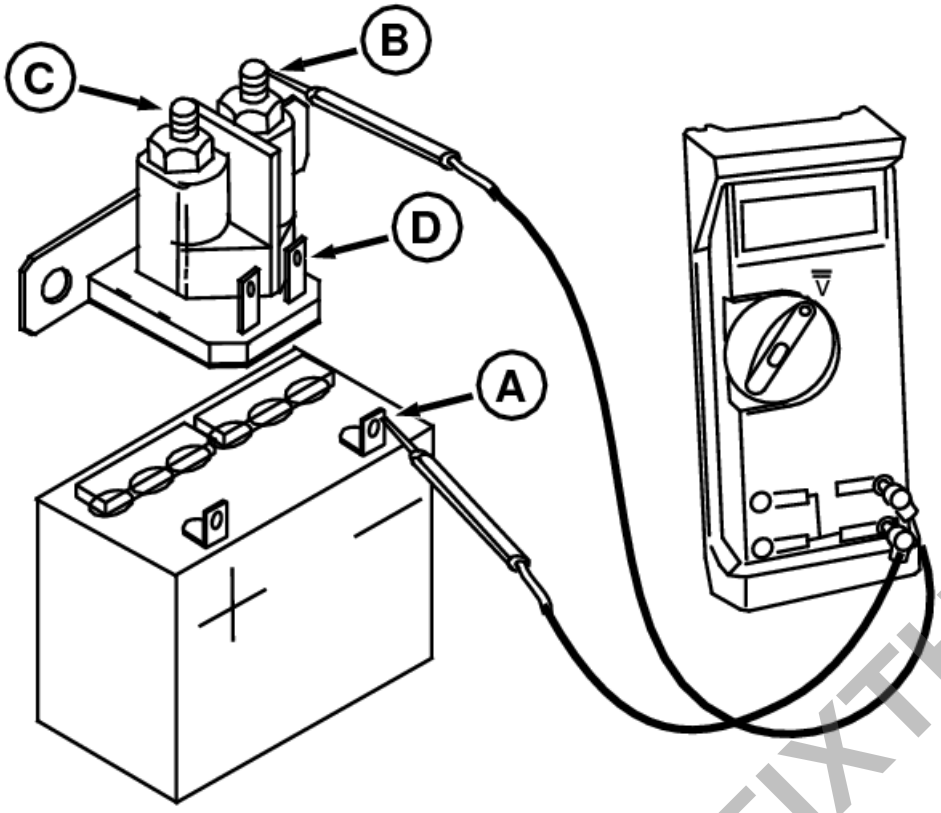

Start Relay Test

LEGEND:

A	Negative Battery Terminal
B	Solenoid Terminal
C	Solenoid Terminal
D	Terminal

Reason:

To determine if starting solenoid is defective.

Procedure:

[1] - Park machine safely.

[2] - Disconnect and ground spark plug leads.

[3] - Connect VOM to negative (-) battery terminal (A) and terminal (B) of starting motor solenoid. Check for battery voltage.

- No battery voltage - Check battery positive (+) terminal and starting motor solenoid terminal (B) for loose connections. Clean any corrosion.
- Battery voltage - go to next step.

[4] - Connect VOM to negative (—) battery terminal (A) and terminal (C) of starting motor solenoid.

[5] - Momentarily turn ignition key to start position and check for battery voltage.

- Battery voltage - starting motor solenoid is not defective.
- No battery voltage - go to next step.

[6] - Connect VOM to negative (—) battery terminal (A) and terminal (D) (Pur wire) of starting motor solenoid.

[7] - Momentarily turn ignition key to start position and check for battery voltage.

- No battery voltage - Check Pur wire and connections.

PREVIEW - YOUFIXTHIS.COM

Download full manual at youfixthis.com

Result:

YES: Go to step **(6)** .

NO: Replace pump drive belt. (See Replace Transmission Drive Belt (S.N. -130000) .)

(6) Continued

Action:

Are the bypass valves closed completely?

Result:

YES: Go to step **(7)** .

NO: Important: Do not over tighten bypass valves.Close bypass valves.

(7) Continued

Action:

Is hydrostatic pump operating properly? (See Test Hydraulic Pump Flow (S.N. -130000) .)

Result:

NO: Inspect hydrostatic pump. (See Disassemble Hydrostatic Pump (S.N. -130000) .)

PREVIEW - YOUFIXTHIS.COM

Download full manual at youfixthis.com

PREVIEW ONLY

You're viewing 25 of 672 pages

The full manual includes:

- All 672 pages, complete
- Searchable PDF (find any keyword)
- No watermarks
- Instant download
- Print-ready quality

GET FULL MANUAL NOW

John Deere Z625, Z645, Z655, Z665 Technical Manual

Scan or click anywhere
youfixthis.com

Click anywhere on this page to get the full manual