MAINTENANCE

PERIODICAL INSPECTION AND MAINTENANCE

● PERIODICAL INSPECTION AND MAINTENANCE

Periodical inspection enables the machine to make the most of its functions and prolongs the machine life. Basically, lubrication and maintenance intervals are determined by the hour meter. If performing lubrication and maintenance according to calendar time is preferred, the hour meter reading corresponds to the lubrication and maintenance period (daily, weekly, monthly, etc.) in calendar time; thus calendar time can be used. Items for which service time cannot be specified are explained in the section WHEN REQUIRED. It is recommended that replenishment and maintenance should be performed earlier than the service time specified in the LUBRICATION AND MAINTENANCE INTERVALS list when using the machine under severe conditions or in dusty or humid areas.

PRECAUTIONS ON MAINTENANCE

● USE GENUINE KOBELCO PARTS

Use only genuine KOBELCO parts and oil for replacement and lubrication.

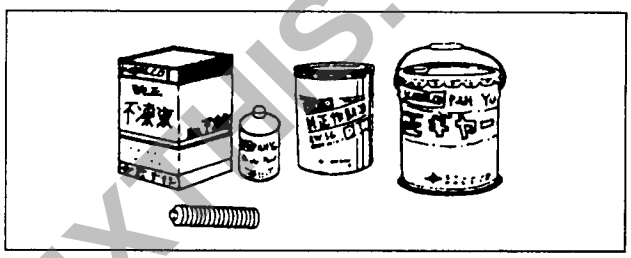

● KEEP THE LUBRICANT CLEAN

Store the lubricant at the clean place indoors. Prevent dust or water from being mixed in with the lubricant. Use only clean lubricant in which water is not mixed.

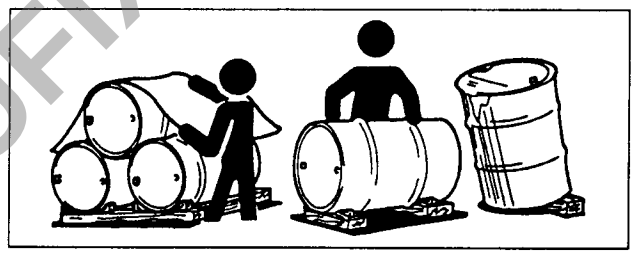

● KEEP THE MACHINE CLEAN

Clean the machine to make it easy to discover problems, such as oil leakage, cracks, and looseness. Especially clean the grease nipple, bleeder, and oil level gauge (oil inspection window).

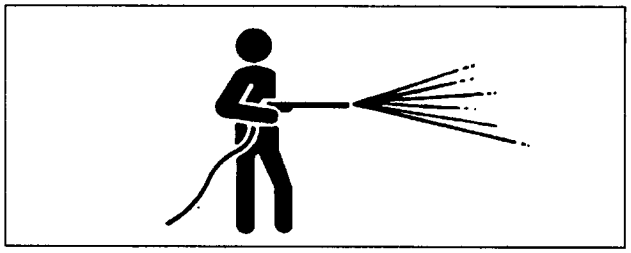

● USE CAUTION IN REGARD TO THE COOLANT AND OIL TEMPERATURE

Do not replace oil, water and filters immediately after the machine is stopped since they will be very hot. Wait until the machine cools down to change them. If the oil, however, is very cool, warm it up first [to approximately 20-40 °C (68-104 °F)] then dispose of it.

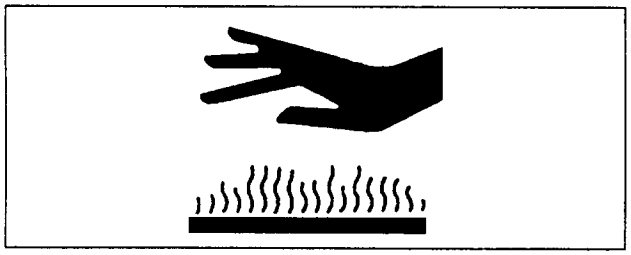

● CHECK THE WASTE OIL AND FILTERS

After changing the oil and filters, check the waste oil and replaced filters for the amount of metal chips or foreign materials.

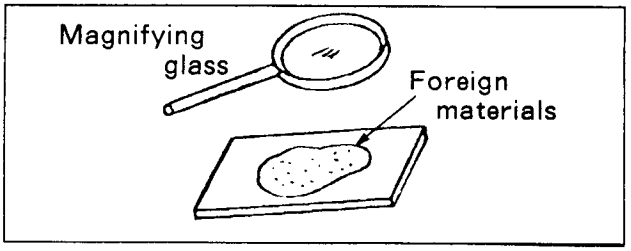

PREVIEW - YOUFIXTHIS.COM

MAIN SPECIFICATIONS

● SPEED AND GRADABILITY

Item \ Model	SK25SR				SK30SR			
	Rubber crawler		Steel crawler		Rubber crawler		Steel crawler	
Slewing Speed (rpm)	8.8				8.4			
Travel Speed km/h(mph)	Low(1st)	High(2nd)	Low(1st)	High(2nd)	Low(1st)	High(2nd)	Low(1st)	High(2nd)
	2.5 (1.6)	4.4 (2.7)	2.4 (1.5)	4.2 (2.6)	2.5 (1.6)	4.3 (2.7)	2.4 (1.5)	4.0 (2.5)
Gradability degree(%)	30° (58%)							

● ENGINE

Model	YANMAR 3TNE78A - YBB	YANMAR 3TNE82A - YB
Type	Diesel, 4-Cycle, vertical water-cooled, 3-cylinder	
Number of cylinders-Bore×stroke	3 - 78mm×84mm (3.07in×3.31in)	3 - 82mm×84mm (3.23in×3.31in)
Total Displacement	1,204cc (73.5cu·in)	1,330cc (81.2cu·in)
Rated Output/Rotation	21.2ps (15.6kw) /2,350rpm	23ps (16.9kw) /2,300rpm
Maximum Torque/Rotation	8.0kgf·m (57.9ft·lbs) /1,500rpm	8.1kgf·m (58.6ft·lbs) /1,600rpm
Starter	12V / 1.2kw	
Alternator	12V / 40A	

● HYDRAULIC COMPONENTS

Hydraulic Pump	Variable displacement axial piston+gear pump	
Hydraulic Motor	Axial piston motor	Orbit motor
Hydraulic Motor (Travel)	Axial piston, 2 - Speed motor	
Control Valve	9 - functions multiple control valve	
Cylinder (Boom, Arm, Swing, Bucket, Blade)	Double action cylinder	
Return filter	Safety valve containing filter type (10 μ)	

● SIDE DIGGING

Type		Boom swing by hydraulic cylinder
Boom Swing Angle	Canopy	55° (Right) / 85° (Left)
	Cab	55° (Right) / 70° (Left)

● WEIGHT

Fully - equipped weight	Rubber crawler			Steel crawler			Rubber crawler		Steel crawler	
	Canopy	Cab	RopsCanopy	Canopy	Cab	RopsCanopy	Canopy	Cab	Canopy	Cab
kg (lbs)	2,630 (5,800)	2,760 (6,090)	2,660 (5,870)	2,660 (5,870)	2,790 (6,150)	2,690 (5,930)	2,980 (6,570)	3,110 (6,860)	3,010 (6,640)	3,140 (6,920)
Upper machinery kg (lbs)	1,380 (3,040)	1,510 (3,330)	1,410 (3,110)	1,380 (3,040)	1,510 (3,330)	1,410 (3,110)	1,590 (3,510)	1,720 (3,790)	1,590 (3,510)	1,720 (3,790)
Lower machinery kg (lbs)	975 (2,150)	←	←	1,005 (2,220)	←	←	1,060 (2,340)	←	1,090 (2,400)	←
Attachment (S.T.D) (Boom+Arm+Bucket) kg (lbs)	275 (610)	←	←	←	←	←	330 (730)	←	←	←
Attachment (S.T.D) (Boom+Arm+Bucket) mm (ft·in)	2.15m+1.13m+0.08m³ (7'11"+3'08"+0.105cu.yd)						2.30m+1.18m+0.09m³ (7'07"+3'10"+0.118cu.yd)			
Dozer Blade (Width×Heigt) mm (ft·in)	1,550mm×330mm (5'01"×1'01")						←			
Strokes of Blade (up and down) mm (ft·in)	310mm / 320mm (12.2"×12.6")						290mm / 400mm (11.4"×15.7")			

PREVIEW - YOUFIXTHIS.COM

OPERATION

INSPECTION BEFORE STARTING THE ENGINE

● PREOPERATION INSPECTION

Before starting the engine, walk around the machine to check for any loose nuts and bolts, any oil, fuel, or coolant leakage, and the condition of attachment and hydraulic system. Check for any looseness in the electrical wiring and for any accumulated material (leaves, dirt, etc) in high temperature areas.

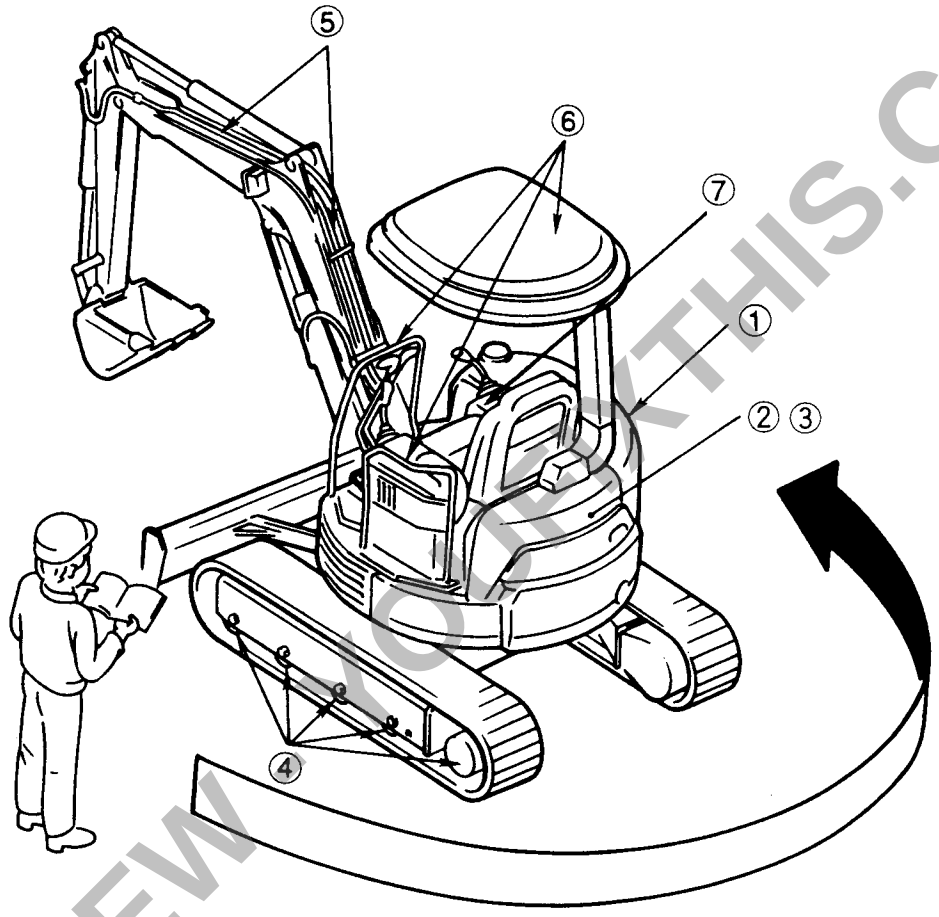

1. Check the engine for any oil, fuel, or coolant leakage. Repair as required.
2. Check the area around the engine and radiator for any accumulated material and remove as required.
3. Check the hydraulic equipment, hydraulic oil tank, hoses, and joints for oil leakage, and repair as required.
4. Check the track assembly, such as the crawler, idlers, and sprockets, for any damage or wear, and the bolts for looseness.
5. Check the attachments, cylinders, linkages, and hoses for any cracks, wear, or looseness and repair as required.
6. Check the guards, steps, and handrails for damage, and the bolts for looseness. Repair and tighten bolts as required.
7. Verify that the gauges and the gauge cluster function properly.

PREVIEW YOUR KTHIS.COM

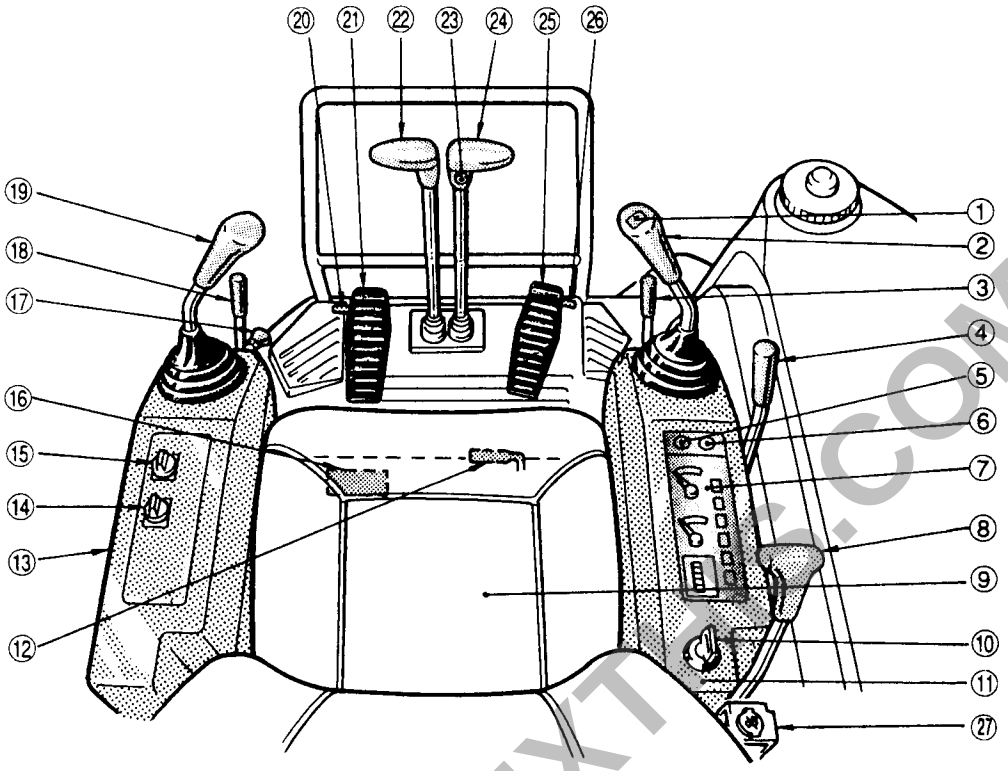

① HORN SWITCH
② RIGHT OPERATING LEVER
③ SAFETY LEVER (CANOPY SPEC.)
④ BLADE OPERATING LEVER
⑤ WORKING LIGHT SWITCH
⑥ DECELERATION SWITCH (OPTION)
⑦ MONITOR PANEL (GAUGE CLUSTER)
⑧ THROTTLE LEVER
⑨ OPERATOR SEAT
⑩ STARTER SWITCH
⑪ RIGHT OPERATING LEVER STAND
⑫ SEAT ADJUST LEVER
⑬ LEFT OPERATING LEVER STAND
⑭ HEATER SWITCH (CAB SPEC.)
⑮ WIPER SWITCH (CAB SPEC.)
⑯ FUSE BOX
⑰ A•B MODE SHIFTER (OPTION)
⑱ SAFETY LEVER (LEFT)
⑲ LEFT OPERATING LEVER
⑳ PEDAL LOCK (OPTION)
㉑ OPTION PEDAL (OPTION)
㉒ LEFT TRAVEL LEVER
㉓ TRAVEL SEED SELECT SWITCH
㉔ RIGHT TRAVEL LEVER
㉕ BOOM SWING OPERATING PEDAL
㉖ PEDAL LOCK (BOOM SWING)
㉗ SOCKET OF 12V POWER SOURCE (EU ONLY)

● Front, rear, right and left direction
In this manual, the front, rear, right and left directions are based on the conditions where the travel motor is at the rear and the operator is facing the direction in which the machine advances (forward).

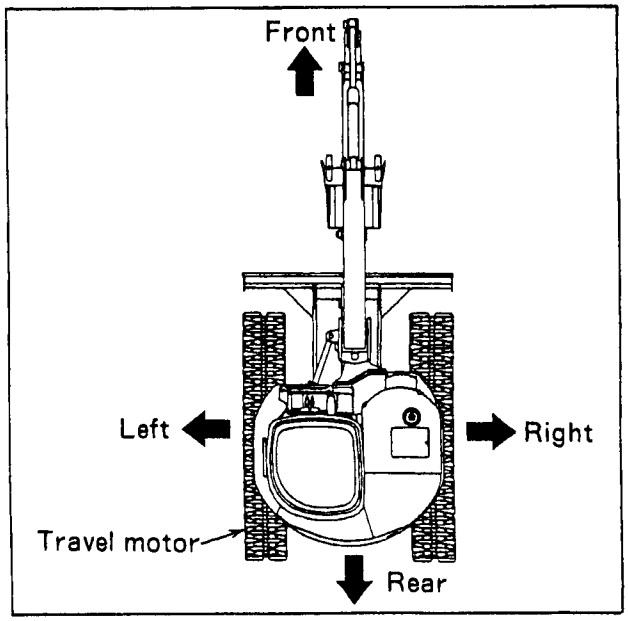

PREVIEW - YOUFIXTOO.COM

HYDRAULIC BREAKER

SELECTION OF THE HYDRAULIC BREAKER

When mounting the breaker on the hydraulic excavator, it is necessary to match stability, hydraulic pressure, and the oil level for each breaker. To select hydraulic breakers, call your dealer or service shop.

BEFORE OPERATING THE HYDRAULIC BREAKER

Consult your KOBELCO distributor for the piping or enforcement of the arm when installing the hydraulic breaker.

Thoroughly read through the Hydraulic Breaker Operation Manual and the section PRECAUTIONS DURING OPERATION of this manual, and use due caution so as not to damage the machine body or hydraulic breaker during operation.

HYDRAULIC OIL LEVEL CHECK AND CONTAMINATION PREVENTION

When the hydraulic breaker is not installed on the machine, attach the blank plugs to the tube end on the arm top end and the hose end on the hydraulic breaker side to prevent dust and water from entering into the piping.

Before starting operation, check the cap screws on the tube fixing clamps for looseness, and the connections of the tubes and hoses for oil leakage.

HOW TO ADJUST THE CARRY-OVER FUNCTION OF CONTROL VALVE

Before operating the machine on which breaker, fork, nibbler, etc. are installed, remove the protective tube ① on the carry-over port V of main control valve, loosen lock nut ②, and tighten set screw ③. After tightening it securely, do not fail to install the protective tube ① again.

Tools : Spanner (HEX 13mm)
Allen wrench (4mm)

Tightening torque :
Lock nut : 1kgf·m(7ft·lbs)
Set screw : 1.4kgf·m(10ft·lbs)

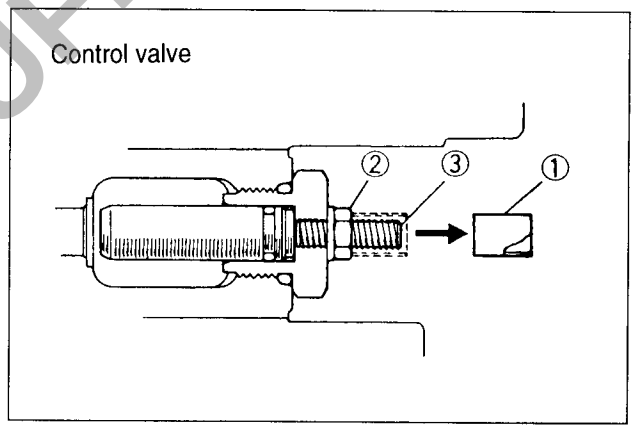

NOTE: If the set screw ③ and lock nut ② are not securely tightened, the plug of control valve may not seat, or even though it is seated it may be opened, and the oil may leak and enter into the tank port.
Do not fail to tighten them to the specified torque and also to check L dimension.

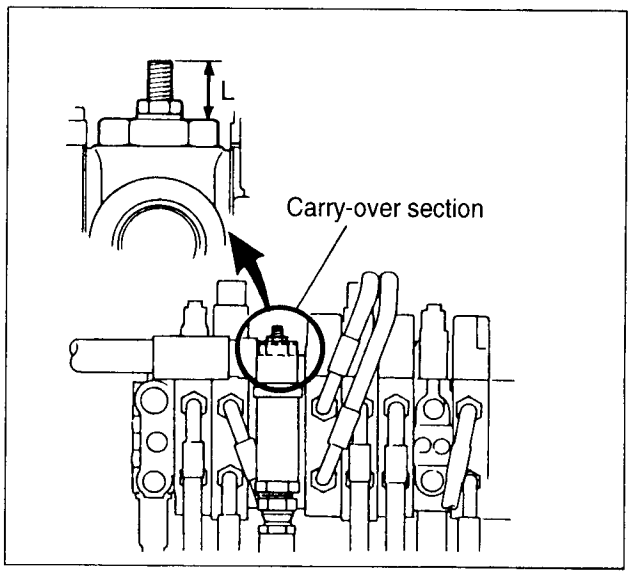

NOTE : 1. The L dimension of set screw ③ when the carry-over function is not performed is 21mm(0.83in).
2. The L dimension of set screw ③ when the carry-over function is performed is 14± 1mm(0.51~0.59in).

7

PREVIEW - YOUFIXTHIS.COM

TRANSPORTATION

WHEN PREPARING TRANSPORTATION PLANS

- Before preparing to transport the excavator refer to the page 6-1 and check the total weight, height, width, traveling speed, ground pressure, etc.
- Survey the width of roads, road surface conditions, and traffic on the roads to be used, and obtain authorization to use the roads if necessary.

● POSTURE DURING TRANSPORTATION

- Ramps
  Relationship of trailer height "H" and ramp length "L"

Units : mm

H	L
750	2800 or more
930	3500 or more
1110	4200 or more
1300	4900 or more

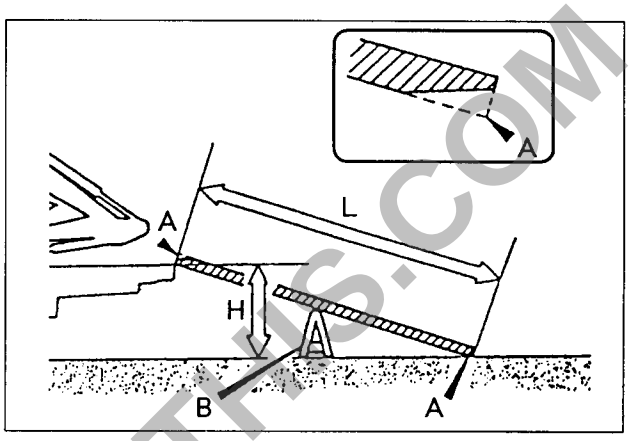

- Choose a length that will keep the slope angel under 15° and a material that is sufficiently strong.
- The ramp width should be at least 1.2 times the machine width.
- Bevel the end of the ramp as shown at point "A" on the figure.
- Fasten the ramp securely to the trailer with a metal fitting, etc., so it will not slip off.
  For better safety, insert a support "B" under the ramp in the middle.

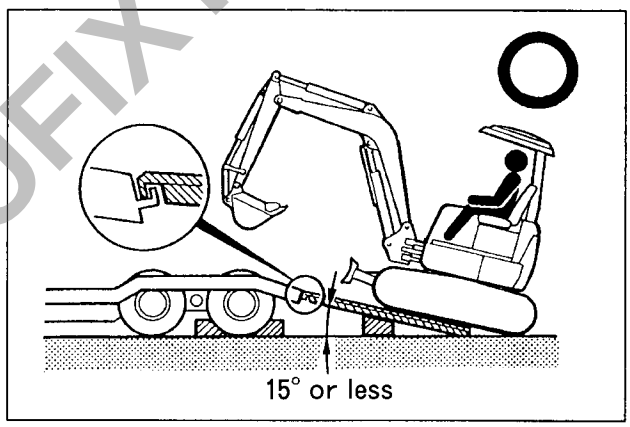

● LOADING AND UNLOADING THE EXCAVATOR

⚠ WARNING

To prevent the arm and bucket cylinder from any damage, you are advised to follow the following instructions

Do not have the arm and/or bucket cylinder fully extended to a "RAMP OVER CENTER" situation. This allows sudden and abrupt contact of the arm or bucket to a trailer deck, ramp or the ground.

This can result in internal mechanical contact, which can stretch the cylinder rod.

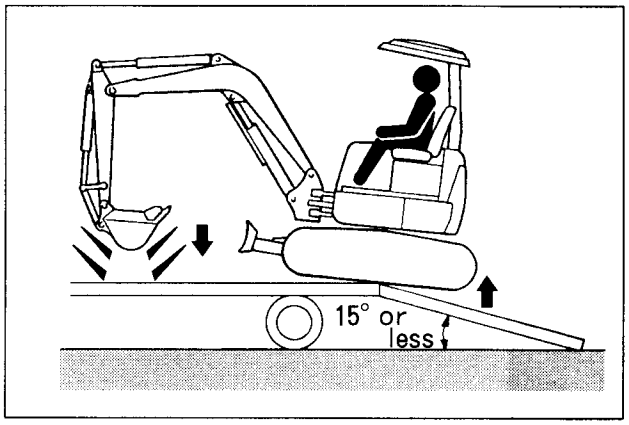

1. Remove any mud, etc., from the lower area to prevent the excavator from slipping sideways off the ramp.

⚠ WARNING

- **Always move at low (1st) speed on a slope.**
- **The excavator should always be loaded and unloaded on firm, level ground. Set the trailer's parking brake and set blocks under the crawler.**

PREVIEW - YOUFIXTHIS.COM

LUBRICATION AND MAINTENANCE INTERVALS

The table below indicates recommended lubrication, replacement, inspection and maintenance intervals of each device according to the calendar time and operation time shown by the hour meter.
Perform inspection and maintenance according to the calendar time or operation time, whichever comes first.
See the inspection and maintenance procedure mentioned below for details.

- Symbols and their meanings:
  - ▨ ····· Necessary regular inspection item.
  - † ····· Only initial inspection is performed.
  - ○ ····· Inspection and /or maintenance is needed.

Device	Interval / Item		When required	Pre-operation 8h	Every week 50h	250h	Every 6 months 500h	Every 12 months 1000h	2000h	Oil & Grease (Replacing part)	Reference page
ENGINE	Engine oil	Checking the level		○						Engine oil	4-22
		Replacing			† (First)	○					4-30
	Engine oil filter	Replacing			† (First)	○				Cartridge	4-31
	Water separator	Checking/ Cleaning			○					Element	4-24
	Fuel filter	Cleaning				○				Element	4-32
		Replacing					○				4-36
	Air cleaner element	Checking/ Cleaning				○				Element	4-34
		Replacing					○				4-34
	Radiator coolant	Checking the level		○						Tap water (LLC)	4-22
		Replacing						○			4-38
	Fan belt	Checking		○							4-23
		Adjusting				○					4-33
	Radiator fin and oil cooler	Cleaning	○								4-16
	Radiator cap	Cleaning	○								4-16
	Radiator hose	Checking				○					4-33
	Checking the color of exhaust gas			○							4-23
	Valve clearance	Checking/ Adjusting						○			4-39
	Compression pressure	Checking/ Adjusting						○			4-39

PREVIEW - YOUFIXTHIS.COM

MAIN SPECIFICATIONS

● SPEED AND GRADABILITY

Item \ Model	SK35SR			
	Rubber crawler		Steel crawler	
Slewing Speed (rpm)	8.9			
Travel Speed km/h(mph)	Low(1st)	High(2nd)	Low(1st)	High(2nd)
	2.2 (1.4)	4.0 (2.5)	2.0 (1.2)	3.8 (2.4)
Gradability degree(%)	30° (58%)			

● ENGINE

Model	YANMAR 3TNE82A - YBB
Type	Diesel, 4-Cycle, vertical water-cooled, 3-cylinder
Number of cylinders-Bore×stroke	3 - 82mm×84mm (3.23in×3.31in)
Total Displacement	1,330cc (81.2cu·in)
Rated Output/Rotation	24ps (17.7kw) /2,400rpm
Maximum Torque/Rotation	8.1kgf·m (58.6ft·lbs) /1,600rpm
Starter	12V / 1.2kw
Alternator	12V / 40A

● HYDRAULIC COMPONENTS

Hydraulic Pump	Variable displacement axial piston+gear pump
Hydraulic Motor	Orbit motor
Hydraulic Motor (Travel)	Axial piston, 2 - Speed motor
Control Valve	9 - functions multiple control valve
Cylinder (Boom, Arm, Swing, Bucket, Blade)	Double action cylinder
Return filter	Safety valve containing filter type (10 μ)

● SIDE DIGGING

Type		Boom swing by hydraulic cylinder
Boom Swing Angle	Canopy	55° (Right) / 85° (Left)
	Cab	55° (Right) / 70° (Left)

● WEIGHT

Fully - equipped weight		Rubber crawler			Steel crawler		
		Canopy	Cab	RopsCanopy	Canopy	Cab	RopsCanopy
	kg (lbs)	3,420 (7,540)	3,550 (7,830)	3,450 (7,610)	3,490 (7,700)	3,620 (7,980)	3,520 (7,760)
Upper machinery	kg (lbs)	1,810 (3,990)	1,940 (4,280)	1,840 (4,060)	1,810 (3,990)	1,940 (4,280)	1,840 (4,060)
Lower machinery	kg (lbs)	1,215 (2,680)	←	←	1,285 (2,830)	←	←
Attachment (S.T.D) (Boom+Arm+Bucket)	kg (lbs)	395 (870)	←	←	←	←	←
	mm (ft·in)	2.475m+1.28m+0.11m³ (8'11"+4'02"+0.144cu.yd)					
Dozer Blade (Width×Heigt) mm (ft·in)		1,700mm×330mm(5'07"×1'01")					
Strokes of Blade (up and down) mm (ft·in)		300mm / 410mm (11.8"×16.11")					

PREVIEW - YOUFIXTHIS.COM

● TRAVELING PROCEDURE

⚠ WARNING

If the travel motor is located in the front of the machine, the travel lever must be operated the other way. Confirm the position of the travel motor before operating the travel lever.

⚠ CAUTION

Check that the area around the excavator is safe, then sound the horn to signal that you are starting to operate the excavator.

1. Forward／Reverse travel
   To move the machine forward, push forward both (right and left) travel levers. To move the machine in reverse, pull back the two travel levers. Travel speed changes according to how far you push or pull the levers.

【Driving forward and reverse】

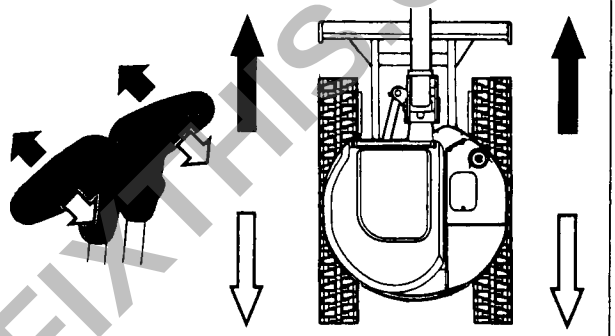

2. Pivot turn
   Pivot means to change direction by driving only one of the tracks. It is effected by pushing and pulling one of the travel levers.

【Pivot turn】

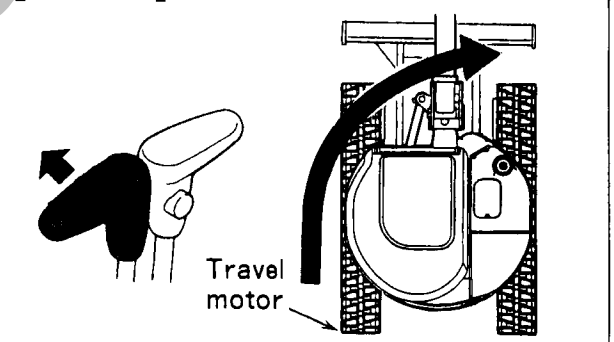

3. Spin turn
   Spin turn means turning the vehicle around on-the-spot, by driving the RH and LH tracks in opposite directions. To do this, push one of the travel levers forward and pull the other one back.

【Spin turn】

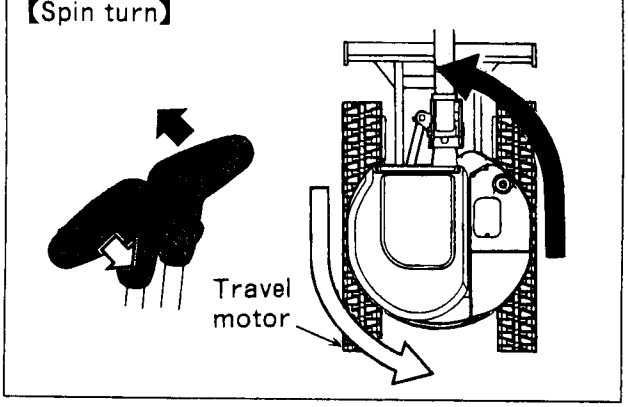

NOTE: ● **Depending upon types of shoes and ground condition, the climbing ability of the machine is 30° (58%) maximum.**
● **When descending a slope, operate the levers slowly. For braking, bring the levers to neutral position, and the will brake by itself.**

PREVIEW - YOUFIXTHIS.COM

ARRANGEMENT AND OPERATION OF LEVERS

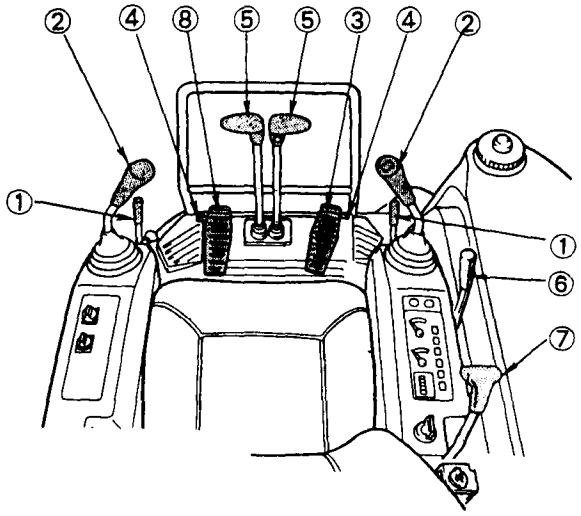

No.	Operating lever and pedals
①	Safety lever
②	Left and right operating levers
③	Boom swing operating pedal
④	Pedal lock device
⑤	Travel levers
⑥	Dozer blade operating lever
⑦	Throttle lever
⑧	Option pedal

① Safety levers
This lever is used to lock the operation of attachment slewing and traveling.

- The function of operating lever is locked by means of hydraulic pressure, so the operating lever moves even the safety lever is locked. But the attachment and slewing do not operate.
  In contrast, the travel lever is locked mechanically, not allowing the movement.

Locking method
Pull the safety lever "A" backward and toward yourself. This raises the lever stand automatically and locks the operating levers.

Releasing the lock
Hold the safety lever "A" and bring it fully down.

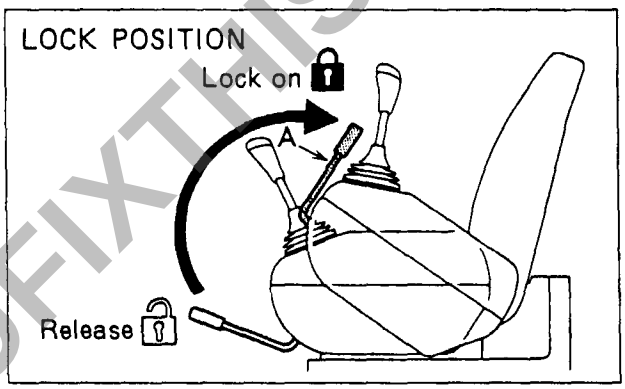

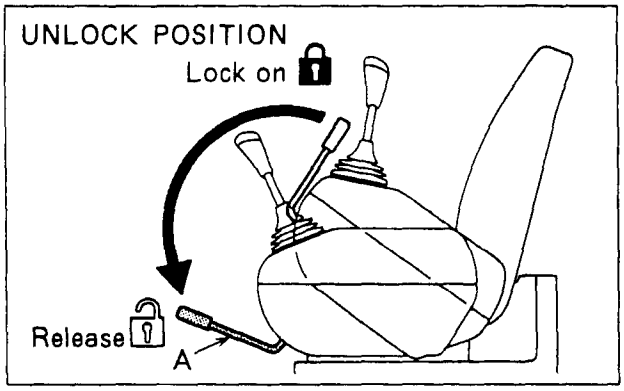

⚠ CAUTION

When pulling up the safety lever, use care so as not to touch the operating lever. Unless the safety lever is pulled up to the upper end, the machine and the slewing function may work.

⚠ CAUTION

When parking or leaving the machine, always bring the bucket down to the ground. Then operate the levers and lock them.

⚠ CAUTION

Even if the safety lever is set to the lock position, boom slewing and dozer blade motions are not locked.

PREVIEW - YOUFIXTHIS.COM

OPERATION PROCEDURE

⚠ CAUTION

ONLY OPERATE BREAKER WITH MACHINE UPPER AND BOOM IN A STRAIGHT, PARALLEL POSITION TO THE CRAWLERS (IDLER SIDE OR SPROCKET SIDE).
DO NOT OPERATE BREAKER WITH MACHINE UPPER OR BOOM IN AN OFFSET OR SWUNG POSITION.

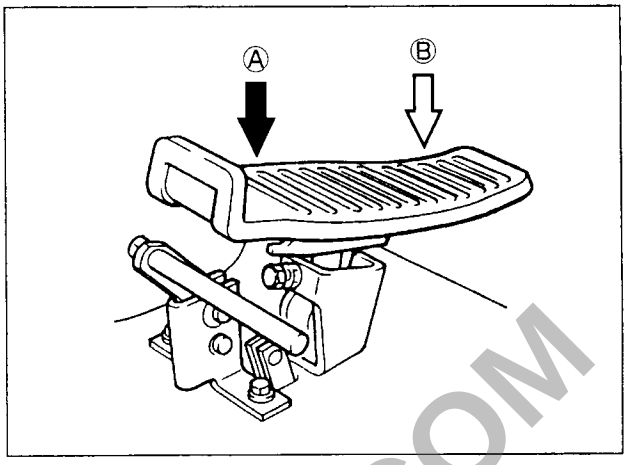

Machines with breaker independent circuit and nibblers and breaker changeable circuits are available. The operation pedal at the front left side of the operator's seat is used to operate the machine.
For machines with nibblers and breaker changeable circuits, carry out appropriate switching in accordance with "Switching the Selector Valve" as described later.

● OPERATION PEDAL

1. Hydraulic breaker independent circuit
   Release the pedal lock at the front left side of the operator's seat to operate the pedal.

Direction to push down pedal	Operation conditions
Press on the heel side Ⓑ	Breaker operates
Press on the toe side Ⓐ	Breaker stops

2. Nibbler and breaker changeable circuit
   Release the pedal lock at the front left side of the operator's seat to operate the pedal.

● HYDRAULIC BREAKER

Direction to push down pedal	Operation conditions
Press on the heel side Ⓑ	Breaker operates
Press on the toe side Ⓐ	Breaker stops

● NIBBLER

Direction to push down pedal	Operation conditions
Press on the toe side Ⓐ	Nibbler closed (Grip)
Press on the heel side Ⓑ	Nibbler open (Release)

● PEDAL LOCK DEVICE

The pedal lock device is used to lock the operation pedal.

🔒 ····· Lock position

🔓 ····· Release position

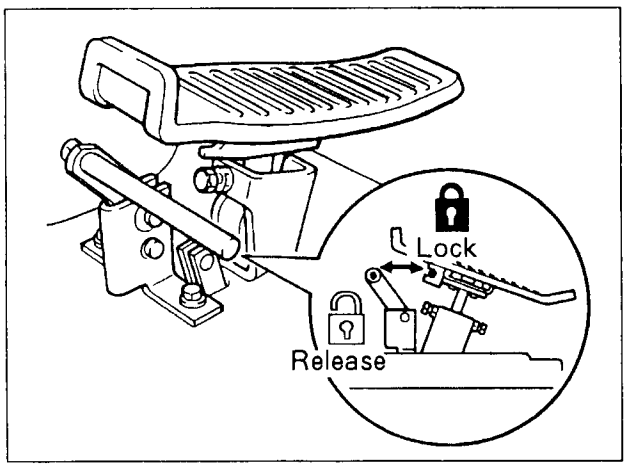

⚠ CAUTION

When the breaker and nibbler operations are unnecessary, set the pedal lock device in the lock position. Carelessly touching an unlocked operation pedal may result in a serious accident.

PREVIEW - YOUFIXTHIS.COM

2. When loading extend the bucket cylinder so it is directly over the trailer, lift the dozer blade, then climb up the ramp at slow speed.

3. Once on the trailer, slowly lift the boom, slew, and set the excavator.

4. Lock the slewing.

5. Set blocks under the crawler at the front and rear and fasten with wire rope, etc.

6. When unloading, lift the dozer blade, and maintain the bucket at a height of 40 to 50 cm above trailer bed so that it can be guickly lowered to the ground and the machine stopped in an emergency.

⚠ CAUTIOIN

Never change directions or slew while on the ramp, as this extremely dangerous.

PREVIEW - YOUFIXTHIS.COM

PREVIEW ONLY

You're viewing 12 of 162 pages

The full manual includes:

- All 162 pages, complete
- Searchable PDF (find any keyword)
- No watermarks
- Instant download
- Print-ready quality

GET FULL MANUAL NOW

Kobelco SK25SR, SK30SR, SK35SR Operator Manual

Scan or click anywhere
youfixthis.com

Click anywhere on this page to get the full manual